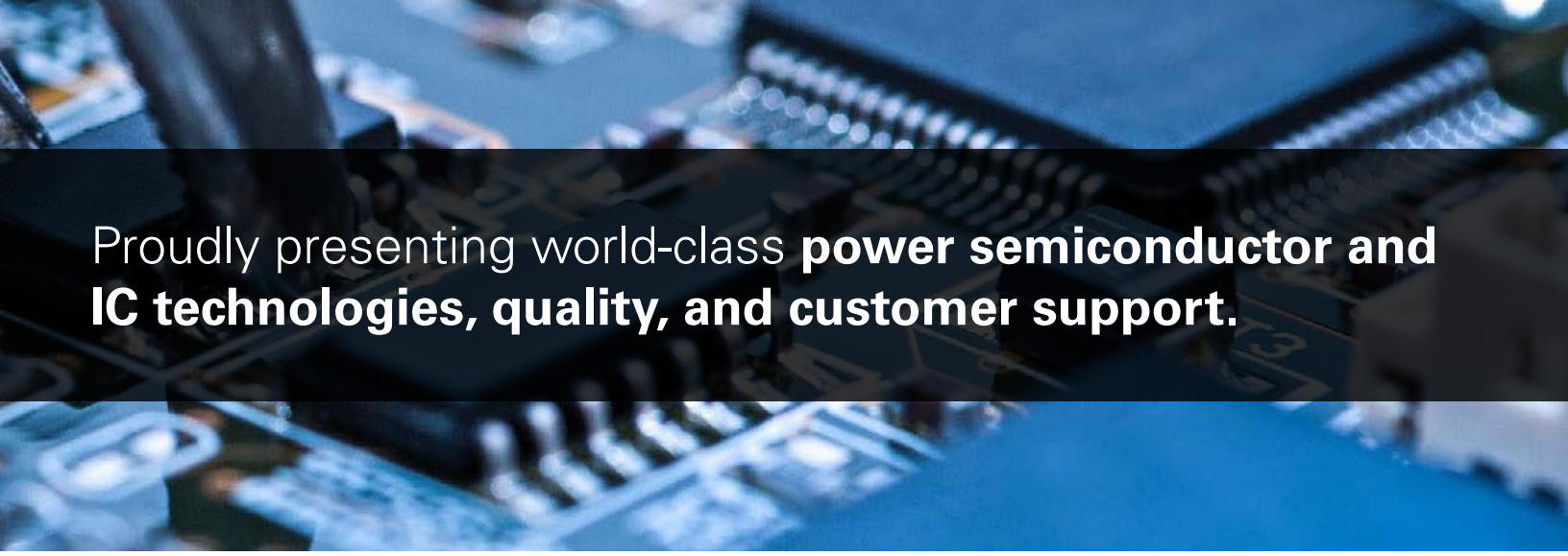

Proudly presenting world-class **power semiconductor and IC technologies, quality, and customer support.**

Littelfuse: Everywhere, Every Day

Founded in 1927, Littelfuse is a diversified industrial technology manufacturing company empowering a sustainable, connected, and safer world. Across more than 20 countries, and with approximately 18,000 global associates, we partner with customers to design and deliver innovative, reliable solutions.

Littelfuse offers an extensive technology portfolio - fuses, semiconductors, polymers, ceramics, relays, sensors, switches, and more. Serving over 100,000 end customers, our products are found in a variety of industrial, transportation, and electronics end markets—everywhere, every day.

Why Choose Littelfuse

Our history of innovation, combined with our customer-first culture, drives us to collaborate with you to develop safer, more reliable products that are energy efficient and compliant with global regulations. We will partner with you to solve complex problems wherever electrical energy is used, bringing design, engineering, and technical expertise to deliver business results.

Complementing our wide portfolio of products is a global network of design and technical support expertise. We offer decades of design experience to help you address application challenges and achieve regulatory compliance.

Your Single Source

Littelfuse offers an extensive power semiconductor product line. We design forward-thinking, application-specific solutions to provide assurance that your most demanding requirements will be met. Our goal is to provide the most complete range of options so you will not have to compromise.

Testing Support

Littelfuse can help ensure that your products withstand most common threats repeatedly and fail safely under extreme circumstances. We can serve as an independent source to provide assistance as you design, by offering lab testing capabilities for customer applications. This testing includes industry-specific required power fault and electrostatic discharge (ESD) / electrically fast transients (EFT) / lightning surge conditions.

Application Knowledge

For over 95 years, engineers and designers around the world have relied on Littelfuse products and application knowledge to support their designs.

Global Support

Littelfuse stays close to customers. With manufacturing, lab, and design facilities located around the globe, application knowledge and technical support are locally available. Also, we offer a network of regional customer support offices and hundreds of independent authorized distributor contacts to assist you.
Visit Littelfuse.com/contact-us to find local support near you.

Operational Excellence

With our global manufacturing footprint, Littelfuse is firmly committed to manufacturing quality products at a competitive price. We build quality into our products and services, striving for zero defects in everything we do, thereby reducing cost and increasing your total satisfaction. We strive to exceed expectations every day.

Quality Assurance

Our global manufacturing facilities abide by strict quality assurance requirements and hold the following quality management system registrations:

- ISO 9001
- ISO14001
- IATF 16949

Nomenclature

Capsule Devices - Excluding IGBT's

W 0646 W C 15 0

Device Type

- **W** **Rectifier diode**
- **M** Fast/soft recovery diode
- **F** Extra fast diode
- **E** HP Sonic-FRD™
- **N** Phase control thyristor
- **R** Distributed gate thyristor
- **P** Fast turn-off thyristor
- **K** Medium voltage thyristor
- **A** Asymmetric thyristor
- **S** Symmetrical gate turn-off thyristor
- **H** Fast symmetrical gate turn-off thyristor
- **G** Asymmetric gate turn-off thyristor
- **Y** Pulse thyristor

0646 Device Nominal Current Rating

* For devices exceeding 9999 Amperes, digit 5 of the part number is replaced with C (x0100)

Electrode Diameter

- **W** 19 mm
- **Y** 25 mm
- **K** 29 mm
- **J** 32 mm
- **L** 34 mm
- **Q** 38 mm
- **D** 44 mm ('B' thickness only), 110mm
- **N** 47 mm
- **M** 50 mm
- **P** 57 mm
- **V** 63 mm
- **H** 66 mm/68 mm
- **Z** 73 mm
- **T** 75 mm
- **E** 85 mm
- **F** 99 mm
- **G** 125 mm

Special Designator

- **0** t_q code (thyristors), V_{RRM} % of V_{DRM} for gate turn-off thyristors – see relevant tables
- **P** PIN diode (product groups: W, M, F, E)
- **R** Rotating package (N, K, W)
- **A** Avalanche-rated diode (W)

15 **Voltage Grade - V_{RRM}, V_{DRM}/100**

Package

(electrode diameter in brackets)

- **A** 26mm reverse build (Q, M, H, T, E, F)
- **B** 8mm (D)
- **C** Standard outline14 mm (W, Y), 16 mm (K), 26 mm (L, Q, M, T, E, N)
- **D** 21 mm (N), 24 mm (V, Z), 26 mm (F, G)
- **E** 35 mm inverse build (T, M, Q, E, H)
- **F** 19.5 mm (L), 26 mm (K, N, V), 35 mm (6.5 kV Sonic diode)
- **G** 35 mm (L, N)
- **H** 14 mm (N), 26 mm (Y)
- **J** 19.5 mm (N), 25.8 mm (V), 26 mm (T)
- **K** Wespack 14.5 mm (J, Q, M, H)
- **L** Wespack 26 mm (Q, M)
- **M** Wespack 33 mm (H)
- **N** 14 mm (W, Y), 26 mm (L)
- **R** Wespack 14 mm (Q), 26 mm (N)

t_q Code			
v	No Code		
A	10	**M**	70
B	12	**N**	100
C	15	**P**	120
D	20	**R**	140
E	25	**S**	160
F	30	**T**	200
G	35	**V**	250
H	40	**W**	300
J	50	**X**	400
K	60	**Y**	500
L	65	**Z**	1000

V_{RRM} % of V_{DRM} for GTO's (S and H types only)	
0	100%
D	80%
Y	100 V

©2023 Littelfuse, Inc

Press-Pack IGBT Capsule Devices

T 0240 N B 45 E

Device Type

T Press-pack IGBT

0240 Device pulse current rating

Electrode diameter

Q 38 mm
N 47 mm
V 63 mm
H 66 mm
T 75 mm
E 85 mm
A 96 mm
D 110 mm
G 125 mm
B 132 mm

Build description for multiple square die

A Reverse conducting
E Asymmetric
G Reverse conducting (IGBT to diode ratio of 2:1)

45 Voltage grade - V_{RRM}/100

B Die Series
D
F

Stud Devices

W 0508 S A 04 0

Device Type

W Stud anode
M Stud cathode
M
N
P
S

0508 Device nominal current rating

Device Polarity

S Stud anode
R Stud cathode

0 t_q code – see tables on page 4 for releant code

04 Voltage grade - V_{RRM}, V_{DRM}/100

Package

A 3/4" stud glass/metal
C 3/4" stud ceramic
E 3/4" HV ceramic stud with lug
F 3/4" HV ceramic stud
H 1/2" ceramic stud
J 1/2" ceramic stud with flag
L M12 stud ceramic with lug
M 3/8" stud ceramic
R M20 stud ceramic with lug & gate leads

All IXYS UK stud devices are available with or without leads, sleeving, nuts, and washers.
Please add one of the following three-letter codes (based on the options required) to the end of the part number when ordering:

000 Leaded stud, no sleeving, no nuts and washers supplied
S0L Leaded stud with standard* sleeving, nuts and washers supplied loose
00L Leaded stud, no sleeving, nuts and washers supplied loose
NLL Non-leaded stud, nuts and washers supplied loose (also applies to devices with flag/tag terminals)
S0F Leaded stud with standard* sleeving, fitted nuts and washers
00F Leaded stud, no sleeving, nuts and washers fitted
NLF Non-leaded stud, nuts and washers fitted (also applies to devices with flag/tag terminals)
S00 Leaded stud with standard* sleeving, no nuts and washers supplied
NLS Non-leaded stud, no nuts and washers fitted (also applies to devices with flag/tag terminals)

* Standard sleeving means the following:
Red for all thyristor studs
Blue for "S" polarity diode studs
Red for "R" polarity diode studs

Nomenclature

- Valid only for products from IXYS/Littelfuse Lampertheim.
- Usage for new technologies, chips, packages, and/or groups.
- Newer data sheets contain description of part number.

Index	0	1	2	3	Value 1	4	5	Value 2	6 (a-c)	6 d	7	8		9
Example 1	M	I	X	G	120	W		1200	DPF	T	E	H	–	PC
Example 2		I	X	A	40	P	G	1200	DHG		L	B	–	TUB
Example 3		C	M	A	20	E		1600			P	Z	–	TRL

Index	Description
0	M = Module; no letter for discretes
1	Kind of main chip: C = SCR, D = Diode, I = IGBT, M = MOSFET
2	Chip technology
3	Chip generation respective to precisely defined technology
Value 1	Current rating
4	Basic circuit
5	Precisely defined circuit
Value 2	Voltage rating
6 (a-c)	as Index 1–3; usage (e.g. for special chips like SiC)
6 d	Specials (e.g., thermistor)
7	Basic package
8	Precisely defined package
Hyphen	-
9	Extras (e.g. delivery formats, auxiliaries)

Examples for Indexes

Index 1 & 2	Description	Detailed
CL	High-Efficiency Thyristor	up to 1200V
CM	Thyristor	up to 1800V
CN	High-Voltage Thyristor	> 2000V
DF	FRED	Gold
DH	Sonic Fast Recovery Diode	Helium
DL	Low Voltage Standard Rectifier	up to 1200V
DM	Standard Rectifier	up to 1800V
DN	High Voltage Standard Rectifier	> 2000V
DP	HiPerFRED™	Platinum
DS	Schottky Diode	2nd Generation
IG	IGBT	PT (Punch Through)
IT	IGBT	Trench
IX	IGBT	XPT™
MK	Superjunction MOSFET	Powered by Infineon CoolMOS™ Bare Die
MT	MOSFET	Trench

©2023 Littelfuse, Inc

Index 4	Description	Detailed	Index 4 & 5
A	Common anode/emitter/source	Thyristor/diode	**AD**
B	1 Phase Rectifier Bridge	Half-controlled (high side)	**BH**
C	Common cathode/collector/drain	Thyristor/diode	**CD**
E	Single Part	+ Multiple cathode pins	**EM**
H	H Bridge	+ 1 Phase rectifier bridge	**HD**
I	Single Part	Copack	**IF**
M	AC-Controlling	Triac	**MT**
P	Phase Leg	High-side thyristor low-side diode	**PD**
Q	Buck Chopper	With series connected dice	**QS**
R	Boost/Brake Chopper	+ Freewheeling diode + $V_{ce,sat}$-Diode	**RG**
S	Brake Chopper (Rating IGBT >> Rating Diode)	+ Freewheeling diode	**SF**
U	3 Phase Rectifier Bridge	+ Brake unit	**UB**
W	6-Pack	+ 3 Phase rectifier bridge & brake unit	**WB**
X	Parallel legs	Anti-parallel	**XA**
Y	Half 3 Phase Bridge	Common anode	**YA**

Index 7 & 8 Discretes	Description	Index 7 & 8 Discretes	Description
FA	i4-Pac (3sym)	**NB**	SOT-227UI (minibloc)
FB	i4-Pac (3HV)	**PA**	TO-220AC (2)
FC	i4-Pac (5)	**PB**	TO-220AB (3)
FD	i4-Pac (5HC)	**PC**	TO-263AB (D2Pak) (2)
FE	i4-Pac (2HV)	**PJ**	ISOPLUS220AB (3)
HA	TO-247AD (2)	**PM**	TO-220ACFP (2)
HB	TO-247AD (3)	**PN**	TO-220ABFP (3)
HF	PLUS247 (3)	**PZ**	TO-263AB (D2Pak) (2HV)
HI	ISOPLUS247 (2)	**QB**	TO-3P (3)
HJ	ISOPLUS247 (3)	**TC**	TO-268AA (D3Pak) (2)
HR	ISO247 (3)	**TZ**	TO-268AA (D3Pak) (2HV)
IB	TO-262 (I2Pak) (3)	**UC**	TO-252AA (DPak)
LB	SMPD-B	**UZ**	TO-252AA (DPak) (2HV)
NA	SOT-227B (minibloc)		

Index 7 & 8 Discretes	Description	Index 7 & 8 Discretes	Description
CA	ComPack	**TA**	TO-240AA-1B
CB	ComPack	**TB**	TO-240AA-1B
CC	ComPack	**TG**	TO-240AA-1B
ED	E2-Pack	**VA**	V1-A-Pack
EH	E3-Pack	**VC**	V1-B-Pack
KA	Y1-CU	**VH**	V2-Pack
KB	Y1-CU	**YA**	Y4-M6
KC	Y1-CU	**YB**	Y4-M6
SF	Simbus F	**YD**	Y4-M6

Index 6 d	Specials	Index 9	Packaging
P	PressFit-Pin	**NI**	No Metal Inserts
PT	PressFit-Pin + Thermistor	**PC**	Phase Change Material
PST	PressFit-Pin + Shunt + Thermistor	**TRL**	Tape & Reel Left
S	Shunt	**TRR**	Tape & Reel Right
T	Thermistor	**TUB**	Tube

PressFit-Pin for E2, E3, and SimBus F Module Packages

IXYS presents new PressFit-Pin technology for E2 and E3 module packages. Modules equipped with these pins can be connected to the PCB without soldering. For the pressing process, either hand tools or pressing machines can be used. The benefits of the assembly are as follows:

- Simplified process
- Reduced mounting time
- No risk of bad solder contacts
- Reduced aging of pin contact
- No thermal stress for the PCB assembly
- Press-out is possible for maintenance

The pin concept is based on the proven "Bizon-pin" concept. The pressing process is a plastic deformation of pin and via of the board, ending in a cold welding. The pin features are as follows:

- Pin qualification according to IEC 60352-5
- High conductive Cu alloy with Ni gal. tin surface
- Very low contact resistance
- Low press-in force per pin; PCB hole diameter has independent press-out force
- Littelfuse PressFit-Pins are compatible to market standards

A Close Look at the PressFit-Pin Technology

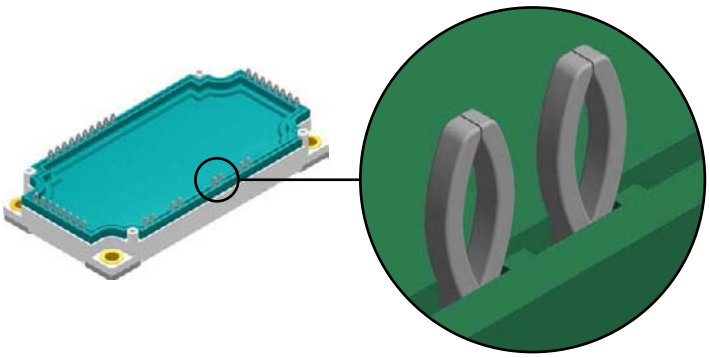

Start with the Following Module Types:

E2

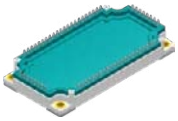

E3

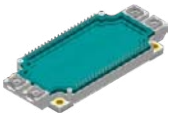

SimBus F

Board and Via Requirements E2 and E3			
Parameter	**Min.**	**Typical**	**Max.**
Drill hole diameter	–	2.35 mm	–
Final hole diameter	2.14 mm	2.20 mm	2.29 mm
Cu thickness inside the hole	>25 µm	–	–
Sn thickness inside the hole	–	–	<15 µm
Cu thickness for PCB tracks	35 µm	70 µm 105 µm	–
PCB thickness	1.60 mm	2.00 mm	–
Metallization PCB	chem. tin	–	–

Board and Via Requirements SimBus F			
Parameter	**Min.**	**Typical**	**Max.**
Drill hole diameter	–	1.16 mm	–
Final hole diameter	1.00 mm	1.05 mm	1.10 mm
Cu thickness inside the hole	>25 µm	–	–
Sn thickness inside the hole	–	–	<15 µm
Cu thickness for PCB tracks	35 µm	70 µm 105 µm	–
PCB thickness	1.60 mm	2.00 mm	–
Metallization PCB	chem. tin	–	–

©2023 Littelfuse, Inc

High Voltage TO-252 (D-Pak) Package

Creepage (min): pin/pin: 3.6 mm
pin/Cu back-side: 2.5 mm

X004a
TO-252AA

Part Number	Technology	Config.	V_{RRM}	I_{FAV} / I_D @ T_C	
			V	A	°C
Diode					
DMA10IM1200UZ	Standard Diode	Single	1200	10	150
DMA10IM1600UZ	Standard Diode	Single	1600	10	150
DMA10P1200UZ	Standard Diode	Phase Leg	2 × 1200	10	150
DMA10P1600UZ	Standard Diode	Phase Leg	2 × 1200	10	150
Sonic Diode					
DHG10IM1800UZ	Fast Recovery Diode	Single	1800	10	100
MOSFET					
IXTY1R4N120PHV	Standard MOSFET	Single	1200	1.4	25

High Voltage TO-263 (D2-Pak) Package

Creepage (min): pin/pin: 4.2 mm
pin/Cu back-side: 4.7 mm

X011c
TO-263ABHV

Part Number	Technology	Config.	V_{RRM}	I_{FAV} / I_D @ T_C	
			V	A	°C
Diode					
DMA10IM1600PZ	Standard Diode	Single	1600	10	150
DMA30IM1600PZ	Standard Diode	Single	1600	30	140
DNA30E2200PZ	Standard Diode	Single	2200	30	140
DNA30EM2200PZ	Standard Diode	Single	2200	30	140
DMA10P1600PZ	Standard Diode	Phase Leg	2 × 1800	10	150
DMA10P1800PZ	Standard Diode	Phase Leg	2 × 1800	10	150
DAA10EM1800PZ	Avalanche Diode	Single	1800	10	150
DAA10P1800PZ	Avalanche Diode	Phase Leg	2 × 1800	10	150
FRED / HiPerFRED					
DSEI12-12AZ	FRED	Single	1200	11	100
DSEP12-12AZ	HiPerFRED	Single	1200	12	135
DSEP12-12BZ	HiPerFRED	Single	1200	15	130
SiC Diodes					
LSIC2SD065D10A	Schottky Barrier Diode	Single	650	10	147
LSIC2SD065D20A	Schottky Barrier Diode	Single	650	20	135
LSIC2SD120D10A	Schottky Barrier Diode	Single	1200	10	151
LSIC2SD120D20A	Schottky Barrier Diode	Single	1200	20	150

High Voltage TO-263 (D^2-Pak) Package

Creepage (min): pin/pin: 4.2 mm
pin/Cu back-side: 4.7 mm

X011c
TO-263ABHV

Part Number	Technology	Config.	V_{RRM}	I_{FAV} / I_D @ T_C	
			V	A	°C
Thyristor					
CLA5E1200PZ	High Efficiency SCR	Single	1200	5	135
CLA15E1200NPZ				15	120
CLA30E1200NPZ	High Efficiency SCR	Single	1200	30	115
CLB30I1200PZ				30	115
CLA40E1200NPZ	High Efficiency SCR	Single	1200	40	125
CLB40I1200PZ				40	125
CMA20E1600PZ	Standard Thyristor	Single	1600	20	115
CMA30E1600PZ				30	115
CME30E1600PZ	Fast Thyristor	Single	1600	30	80
Triac					
CLA30MT1200NPZ	High Efficiency	Triac	1200	15	120
CLA40MT1200NPZ				20	115

Part Number	Technology	Config.	V_{CES}	I_{C25}	$V_{CE(sat)}$
			V	A	V
IGBT & BiMOS™					
IXA4IF1200UC	XPT™ IGBT	Copack	1200	9	1.8
IXYA20N120C3HV	Fast XPT™ IGBT	Single	1200	40	3.4
IXYA20N120A4HV	Gen4 XPT™ IGBT	Single	1200	80	1.7
IXYA20N120B4HV				76	1.8
IXYA20N120C4HV	Gen4 XPT™ IGBT	Single	1200	68	2.1
IXYA30N120A4HV				106	1.6
IXYA8N250CHV	High Voltage XPT™ IGBT	Single	2500	29	3.4
IXYA12N250CHV				28	3.7
IXBA16N170AHV	High Voltage BiMOS™	Single	1700	16	6
IXBA10N300HV	High Voltage BiMOS™	Single	3000	34	2.8
IXBA14N300HV				38	2.7

Part Number	Technology	Config.	V_{DSS}	I_{D25}	R_{DSon} max.
			V	A	mΩ
MOSFET					
IXFA8N85XHV	X-Class HiPerFET™	Single	850	8	0.85
IXFA14N85XHV				14	0.55
IXFA20N85XHV				20	0.33
IXTA08N100D2HV	Depletion Mode MOSFET	Single	1000	0.8	21
IXTA3N100D2HV				3	6
IXTA05N100HV	High Voltage MOSFET	Single	1000	0.75	17
IXTA3N120HV		Single	1200	3	4.5
IXTA3N150HV	High Voltage MOSFET	Single	1500	2	7.3
IXTA4N150HV				4	6
IXTA1N200P3HV	High Voltage MOSFET	Single	2000	1	40
IXTA02N250HV		Single	2500	0.2	450

©2023 Littelfuse, Inc

High Voltage TO-268 (D^3-Pak) Package

Creepage (min): pin/pin: 9.4 mm
pin/Cu back-side: 5.8 mm

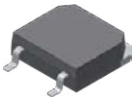

X019a
TO-268AAHV

Part Number	Technology	Config.	V_{CES}/V_{DSS}	I_{C25}/I_{D25}	$V_{CE(sat)}$ typ.	R_{DSon} Max
			V	A	V	mΩ
IBGT						
IXYT30N65C3H1HV	Gen3™ XPT™ IGBT	Single	650	60	2.7	–
IXYT20N120C3D1HV			1200	36	3.4	–
IXYT40N120A4HV	Gen4™ XPT™ IGBT	Single	1200	150	1.8	–
IXYT55N120A4HV				175	1.5	–
IXYT85N120A4HV				300	1.5	–
IXYT12N250CV1HV	High Voltage XPT™ IGBT	Single	2500	28	3.7	–
IXYT25N250CHV				95	4	–
IXYT30N450HV	High Voltage XPT™ IGBT	Single	4500	60	3.9	–
IXBT16N170AHV	High Voltage BiMOS™	Single	1700	16	6	–
IXBT22N300HV			3000	60	2.7	–
IXBT32N300HV	High Voltage BiMOS™	Single	3000	80	2.8	–
IXBT42N300HV				104	3	–
IXBT16N360HV	High Voltage BiMOS™	Single	3600	48	2.5	–
IXBT20N360HV				70	3.4	–
MOSFET						
IXTT140N075L2HV	Linear MOSFET	Single	75	140	–	11
IXTT44N25L2HV			250	44	–	75
IXFT26N100XHV	X–class HiPerFET™	Single	1000	26	–	320
IXFT32N100XHV				32	–	220
IXTT34N65X2HV	X2–class MOSFET	Single	650	34	–	96
IXFT60N65X2HV	X2–class HiPerFET™	Single	650	60	–	52
IXFT80N65X2HV				80	–	38
IXFT30N85XHV	X2–class HiPerFET™	Single	850	30	–	230
IXFT40N85XHV				40	–	145
IXFT50N85XHV				50	–	105
IXFT140N20X3HV	X3–class HiPerFET™	Single	200	140	–	96
IXFT180N20X3HV				180	–	75
IXFT220N20X3HV				220	–	62
IXFT120N25X3HV	X3–class HiPerFET™	Single	250	120	–	120
IXFT150N25X3HV				150	–	90
IXFT170N25X3HV				170	–	74
IXFT100N30X3HV	X3–class HiPerFET™	Single	300	100	–	135
IXFT120N30X3HV				120	–	110
IXFT150N30X3HV				150	–	83
IXTT240N15X4HV	X4–class MOSFET	Single	150	240	–	4.4
IXTT4N150HV	High Voltage MOSFET	Single	1500	4	–	6
IXTT12N150HV				12	–	2
IXTT3N200P3HV	High Voltage MOSFET	Single	2000	3	–	8
IXTT1N250HV			2500	1.5	–	40
IXTT1N300P3HV	High Voltage MOSFET	Single	3000	1	–	50
IXTT2N300P3HV				2	–	21
IXTT02N450HV	High Voltage MOSFET	Single	4500	0.2	–	625
IXTT1N450HV				1	–	80

High Voltage TO-268 (D³-Pak) Package

Creepage (min): pin/pin: 9.4 mm
pin/Cu back-side: 5.8 mm

X019a
TO-268AAHV

Part Number	Technology	Config.	V_{RRM}	I_{DAV}/I_{TAV} @ T_C	
			V	A	°C
Rectifier					
DSEI120-12AZ	FRED	Single	1200	109	60
DSEP60-12AZ	HiPerFRED	Single	1200	60	115
DSEP90-12AZ	HiPerFRED	Single	1200	90	105
DSP45-12AZ	Standard Diode	Phase leg	2 × 1200	45	130
DSP45-16AZ			2 × 1600	45	130
DLA100IM1200TZ	Standard Diode	Phase leg	1200	100	105
CLA60MT1200NTZ	High Efficiency	Triac	1200	30	120
CLA100E1200TZ	Standard Thyristor	Single	1200	100	105
CNE60E2200TZ	High Voltage Thyristor	Single	2200	60	80

ISO247 Package

X016c
ISO247™

Part Number	Technology	Config.	V_{RRM}	I_{DAV}/I_{TAV} @ T_C	
			V	A	°C
Diode					
DSA90C200HR	Schottky Diode	Common Cathode	200	2 × 45	145
DPF30P600HR	HiPerFRED	Phase Leg	2 × 600	30	130
DMA10P1200HR	Standard	Phase Leg	2 × 1200	10	145
DMA10P1600HR			2 × 1600	10	145
DMA30P1600HR	Standard	Phase Leg	2 × 1600	30	105
DMA50P1200HR			2 × 1200	50	105
DCG10P1200HR	SiC Schottky Diode	Phase Leg	2 × 1200	10	80
DCG17P1200HR				17	80
DCG20C1200HR	SiC Schottky Diode	Common Cathode	1200	2 × 10	80
DCG35C1200HR				2 × 17	80
Thyristor					
CLA40E1200HR	High Efficiency	Single	1200	40	95
CMA40E1600HR	Standard	Single	1600	40	90
CLA60MT1200NHR	High Efficiency	Triac	1200	30	100
CLA80MT1200NHR				40	100
CMA60MT1600NHR	Standard	Triac	1600	30	90
CMA80MT1600NHR				40	95

©2023 Littelfuse, Inc

High Voltage TO-247HV and PLUS247HV Packages

X14c
TO-247HV

X015c
PLUS247HV

Part Number	Technology	V_{CES}/V_{DSS}	I_{C25}/I_{D25} (I_{C100})	$V_{CE(sat)}$ typ.	w /Diode	$R_{DS(on)}$ max.	Package
		V	A	V		mΩ	
IGBT							
IXYH8N250CHV	XPT™ IGBT	2500	(8)	4	–	–	TO-247HV
IXYH8N250CV1HV			(8)	4	•	–	
IXYH12N250CHV			(12)	4.5	–	–	TO-247HV
IXYH12N250CV1HV			(12)	4.5	•	–	
IXYH16N250CV1HV			(16)	4	•	–	TO-247HV
IXYH25N250CHV			(25)	4	–	–	
IXYX25N250CV1HV			(25)	4	•	–	PLUS247HV
IXYX40N250CHV			(40)	4	–	–	
IXYH30N450HV		4500	(30)	3.9	–	–	TO-247HV
IXYX40N450HV			40	3.9	–	–	PLUS247HV
IXBH10N300HV	BiMOSFET™	3000	34	2.8	–	–	TO-247HV
IXBH14N300HV			38	2.7	–	–	
IXBH22N300HV			60	2.7	–	–	TO-247HV
IXBX28N300HV			62	2.7	–	–	PLUS247HV
IXBH32N300HV			(32)	2.8	–	–	TO-247HV
IXBH42N300HV			(42)	2.5	–	–	
IXBH16N360HV		3600	48	2.5	–	–	TO-247HV
IXBH20N360HV			70	3.4	–	–	
IXBX50N360HV			125	2.9	–	–	PLUS247HV
MOSFET							
IXTH02N450HV	MOSFET	4500	0.2	–	–	625	TO-247HV
IXTH1N450HV			1	–	–	80	
IXTX1R4N450HV	MOSFET	4500	1.4	–	–	40	PLUS247HV
IXTH1N200P3HV	Polar 3 MOSFET	2000	1	–	–	40	TO-247HV
IXTH3N200P3HV			3	–	–	8	
IXTX6N200P3HV	Polar 3 MOSFET	2000	6	–	–	4	PLUS247HV
IXTH06N220P3HV	Polar 3 MOSFET	2200	0.6	–	–	80	TO-247HV
IXTH1R8N220P3HV			1.8	–	–	21.5	
IXTH05N250P3HV	Polar 3 MOSFET	2500	0.5	–	–	110	TO-247HV
IXTH04N300P3HV	Polar 3 MOSFET	3000	0.4	–	–	190	TO-247HV
IXTH1N300P3HV			1	–	–	50	
IXTH2N300P3HV			2	–	–	21	
IXTX4N300P3HV	Polar 3 MOSFET	3000	4	–	–	12.5	PLUS247HV

ISO247 Package

X016c
ISO247™

Part Number	Technology	Config.	V_{CES}/V_{DSS}	I_{C25}/I_{D25}	$V_{CE(sat)}$ typ.	$R_{DS(on)}$ max.
			V	A	V	mΩ
IGBT						
IXA20IF1200HR	XPT™ IGBT	Copack	1200	33	1.8	–
IXA30IF1200HR				48	1.8	–
IXA40IF1200HR				63	1.8	–
ITF48IF1200HR	Fast Trench IGBT	Copack	1200	72	2.4	–
MOSFET						
IXFJ26N50P3	Polar3™ HiperFET™	Single	500	14	–	0.265
IXFJ80N25X3	X3-Class HiPerFET™	Single	250	44	–	0.018
IXFJ20N85X			850	9.5	–	0.36
IXTJ3N150	High Voltage MOSFET	Single	1500	2.3	–	8
IXTJ4N150				2.5	–	6
IXTJ6N150				3	–	3.85

TO-247-4L Package

L014d
TO-247-4L

Part Number	V_{DSS}	I_D $T_C = 25$ °C	I_D $T_C = 100$ °C	$R_{DS(on)}$ $T_J = 25$ °C	C_{iss} typ.	Q_g typ.	R_{thJC}
	V	A	A	mW (typ)	pF	nC	K/W
SiC MOSFET							
LSIC1MO120G0025	1200	100	70	25	4465	250	0.3
LSIC1MO120G0040	1200	65	50	40	2825	160	0.42

©2023 Littelfuse, Inc

Isolated Discrete Packages

ISOPLUS247™ is the Direct Copper Bond (DCB) - isolated version of the PLUS247™ package, TO-247 without a mounting hole. The design of this patented package is revolutionary: the silicon chip is soft soldered onto a DCB substrate instead of the usual copper lead frame. The DCB ceramic, which is the same substrate material used in high-power modules, provides not only a high isolation capability of 2500 V_{RMS} but also unbeatable low thermal resistance compared to conventional, externally mounted isolation materials.

Advantages:

- Isolation capability from leads to backside of 2500 V_{RMS} – no external isolation foil needed
- Thermal resistance from junction to case only slightly higher than for non-isolated versions
- Increased power and temperature cycling capability
- DCB can be patterned like printed circuit boards to allow special functions to be realized

While the junction-to-case thermal resistance is higher than that of an equivalent non-isolated device, what really matters is the total thermal resistance from junction-to-heatsink (R_{thJH}). After comparing a device in ISOPLUS247™ to its companion in the non-isolated package with an external isolation foil, the overall R_{th} was found to be lower for the ISOPLUS247 package.

Due to the matched thermal expansion coefficients of silicon and DCB ceramic, mechanical stress to the die and solder caused by power and temperature cycling is reduced, improving reliability. Mounting is done with clips; this not only saves time but also guarantees constant pressure over the lifetime of the assembly.

Parts in the ISOPLUS247™ housing can be identified by the letter "R" in the IXYS part number. Potentially, all devices now encapsulated in TO-247, TO-264, and PLUS247™ housings can be molded in the ISOPLUS247™. There are already more than 100 types of ISOPLUS247™ available.

Another interesting feature is the capability to pattern the DCB substrate like a printed circuit board. Now, additional special functions can be realized, e.g., the series connection of single diode chips within one package.

ISOPLUS220™, ISOPLUS247™, and ISOPLUS264™ are the DCB-based substitutes for the corresponding standard packages.

A larger version of this packaging technology is the ISOPLUSi4-PAC™, which has up to five terminal pins, making it possible to create full diode bridges, phase-leg transistor configurations, buck and boost converters, and much more within one isolated discrete package.

ISOPLUS-DIL™ 37.5 mm long and 25 mm wide provides the largest mounting area in the ISOPLUS™ family. It is available in 2 pin out version: "GWM" configuration with polar power pins for 300 A_{RMS} on one side, 12 control pins on the opposite side, and the "GMM" configuration with 12 pins on either side. The package is intended for high-current low voltage applications as either a single switch or a 6-pack. With its high power density and reliability, ISOPLUS-DIL™ is recommended for use in automotive designs.

ISOPLUS-SMPD™ is a member of the IXYS ISOPLUS™ family and provides an increased creepage distance between pins to DCB.

Package Cross-Section

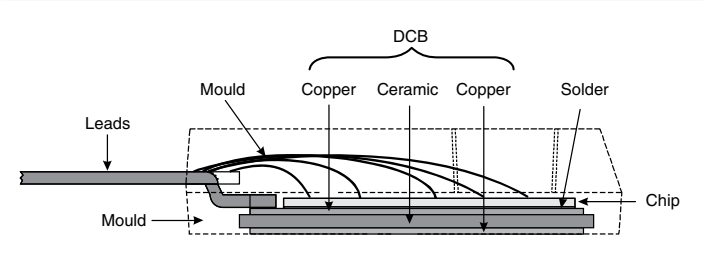

Example:

ISOPLUS247TM Compared to Conventional Isolated Devices

Type	Package	Isolation	R_{thJC} K/W	R_{thCK} K/W	Total K/W	Factor
IXFR 180N10	ISOPLUS247™	Internal DCB	0.3	0.15	0.45	1
IXFX 180N10	PLUS247™	External Foil	0.22	1.02	1.24	2.8

Featured Packages

Features and Benefits

- Electrical isolation of 2500 V
- Low thermal resistance
- Increased power & temperature cycling
- Saves PCB mounting area
- Replaces multiple discretes
- Reduces parasitic inductance & capacitance
- Reduces EMI
- Improved heat spreading

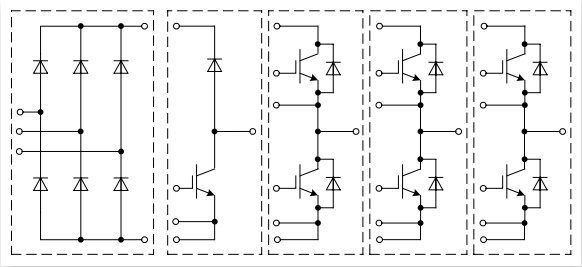

SMPD-B

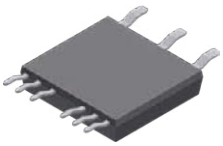

SMPD-X

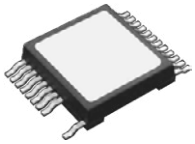

Rectifier

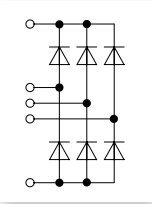

Line Rectifier
DNA 90U1800LB

Sonic-FRD
DHG 60U1200LB

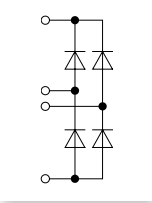

Line Rectifier
DLA 100B1200LB
DLA 100B800LB

Fast Rectifier

DPG 60B600LB	HiPerFRED
DCG 20B650LB	SiC
DHG 40B1200LB	Sonic

Brake & Boost

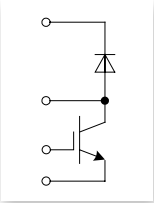

XPT™ - IGBT
IXA 20RG1200DHGLB
IXA 30RG1200DHGLB
IXA 40RG1200DHGLB

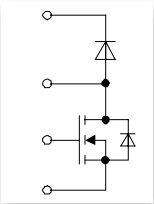

CoolMOS™ Boost
MKE 38RK600DFELB & FRED Diode
MKG 40RK600LB & Sonic Diode
MKH 17RP650DCGLB Dual Boost & SiC

Inverter

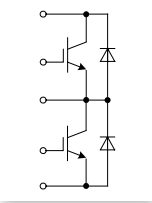

XPT™ - IGBT
IXA 20PG1200DHGLB
IXA 30PG1200DHGLB
IXA 40PG1200DHGLB
ITF 40PF1200DHGTLB

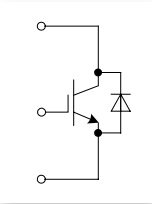

XPT™ - IGBT
MMIX 1X100N60B3H1
MMIX 1X200N60B3H1
MMIX 1Y82N120C3H1
MMIX 1Y100N120C3H1
IXG 70IF1200LB

More Information

Mounting and Cooling Solutions for SMPD Packages

This application note discusses various mounting solutions for Surface Mount Power Device (SMPD) packages. Mounting instructions are provided for single and multi-device mounting, respectively. Read on to learn more.

Scan to visit now

©2023 Littelfuse, Inc

MOSFET

X030a
SMPD-B

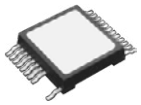

X031a
SMPD-X

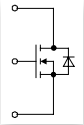

A

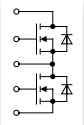

B

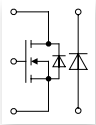

C

Part Number	Circuit Diagram/Technology		V_{DS}	I_{D25}	$R_{DS(on)}$ max.	Q_g	Package
			V	A	A	nC	
Single and Copack							
MMIX1T600N04T2	A	Trench2	40	600	1.3	590	SMPD-X
MMIX1T550N055T2	A	Trench2	55	550	1.3	595	
MMIX1F520N075T2	A	Trench2 HiPerFET™	75	500	1.6	545	
MMIX1F420N10T	A	Trench HiPerFET™	100	334	2.6	670	
MMIX1F360N15T2	A	Trench2 HiPerFET™	150	235	4.4	715	
MMIX1F230N20T	A	Trench HiPerFET™	200	156	8.3	358	
MMIX1F180N25T	A	Trench HiPerFET™	250	132	13	364	
MMIX1F160N30T	A	Trench HiPerFET™	300	102	20	376	
MMIX1F210N30P3	A	Polar3 HiPerFET™	300	108	16	268	
MMIX1F132N50P3	A	Polar3 HiPerFET™	500	63	43	267	
MMIX1F44N100Q3	A	Q3 HiPerFET™	1000	30	245	264	
Buck/Boost							
MKE38RK600DFELB[2]	C	MOSFET[1] CP & FRED	600	50	45	150	SMPD-B
MXB40RK600DFELB	C	X2 Class & FRED	600	68	38	140	SMPD-B
Phase-Leg							
MMIX2F150N20T	B	Trench™ HiPerFET™	200	84	16.5	177	SMPD-X
MMIX2F60N50P3	B	Trench™ HiPerFET™	500	30	110	96	
MKE38P600LB[3]	B	MOSFET[1] CP	600	50	40	150	SMPD-B
MXB40P650LB	B	X2 Class	650	68	38	140	
MCB20P1200LB	B	SiC	1200	22	98 (80 typ.)	62	SMPD
MCB30P1200LB	B	SiC	1200	37	52 (40 typ.)	115	
MCB40P1200LB	B	SiC	1200	58	34 (25 typ.)	161	SMPD
MCL10P1200LB	B	SiC	1200	16	160	50	

1 Powered by Infineon CoolMOS™ superjunction bare die
2 NFND. Replacement part MXB40RK600DFELB
3 NFND. Replacement part MXB40P650LB

IGBTs

X030a
SMPD-B

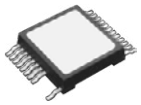

X031a
SMPD-X

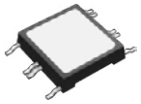

X031b
SMPD-Y

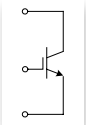

A

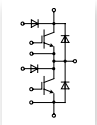

C

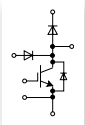

E

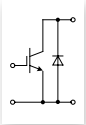

B

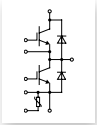

D

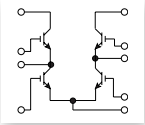

F

Part Number	Circuit Diagram/Technology		V_{ce}	I_{C25} T_C = 25 °C	$V_{CE(sat)}$ typ. T_C = 25 °C	E_{off} typ. T_J = 150 °C (125 °C)	Package
			V	A	A	mJ	
Single and Copack							
MMIX1X200N60B3	A	XPT™	600	223	1.4	3.45	SMPD-X
MMIX1X100N60B3H1	B	XPT™ & Sonic		145	1.5	2.8	
MMIX1X200N60B3H1	B	XPT™ & Sonic	600	175	1.4	3.45	SMPD-X
MMIX1X340N65B4	A	XPT™ IGBT Gen4™		450	1.4	2.54	
MMIX1Y82N120C3H1	B	XPT™ fast & Sonic	1200	78	2.9	(3.7)	SMPD-X
MMIX1Y100N120C3H1	B	XPT™ fast & Sonic		92	2.9	3.55	
MMIX1G120N120A3V1	B	Gen3 IGBT & Sonic	1200	110	1.85	58	SMPD-X
Boost							
IXA20RG1200DHGLB	E	XPT™ & Sonic	1200	32	1.8	1.7	SMPD-B
IXA30RG1200DHGLB	E	XPT™ & Sonic	1200	43	1.9	3	SMPD-B
IXA40RG1200DHGLB	E	XPT™ & Sonic	1200	63	1.85	4.1	SMPD-B
Phase-Leg							
IXA20PG1200DHGLB	C	XPT™ & Sonic	1200	32	1.8	1.7	SMPD-B
IXA30PG1200DHGLB	C	XPT™ & Sonic		43	1.9	3	
IXA40PG1200DHGLB	C	XPT™ & Sonic	1200	63	1.85	4.1	SMPD-B
ITF40PF1200DHGTLB	D	Trench IGBT & Sonic & NTC		56	2.05	2.6	
ITF40PG1200DHGLB	C	Trench IGBT & Sonic		56	2.05	2.6	
Full-Bridge							
MMIX4B22N300	F	IGBT for cap discharge	3000	38	3.1 max	-	SMPD-Y

©2023 Littelfuse, Inc

IGBTs

X030a
SMPD-B

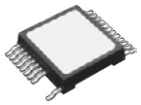

X031a
SMPD-X

X032
MiniSMPD

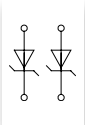

G

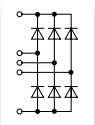

I

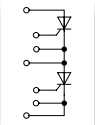

K

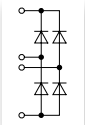

H

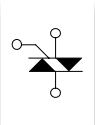

J

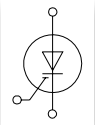

L

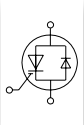

M

Part Number	Circuit Diagram/Technology		V_{RRM}	$I_{D(AV)M}$ @ T_C		Package
			V	A	°C	
Dual						
DSA120X150LB	G	Schottky	150	2 × 60	150	SMPD-B
DSA120X200LB	G	Schottky	200	2 × 60	150	SMPD-B
DSA240X200LB	G	Schottky		2 × 120	150	
DCG40X1200LB	G	SiC	1200	2 × 14.5	80	SMPD-B
1 Phase Bridge						
DPG60B600LB	H	HiPerFRED	600	60	110	SMPD-B
DCG20B650LB	H	SiC	650	21	80	
DLA100B800LB [1]	H	Rectifier	800	124	80	SMPD-B
DMA120B800LB	H	Rectifier		130	90	
DLA100B1200LB	H	Rectifier	1200	124	80	SMPD-B
DHG40B1200LB	H	Sonic		34	80	
3 Phase Bridge						
DHG60U1200LB	I	Sonic	1200	62	80	SMPD-B
DMA90U1800LB	I	Rectifier	1800	99	80	

1 AECQ qualified

Thyristors and Triacs

Part Number	Circuit Diagram/Technology		V_{RRM}	I_{TAV} @ T_C		Package
			V	A	°C	
Dual						
CLA60MU1200LB	2 × J	Triac	1200	2 × 30	100	SMPD-B
CMA50P1600LB	K	Thyristor	2 × 1600	50	90	SMPD-B

MOS-Gated Thyristors

Part Number	V_{DM}	I_{TSM} 1µs T_C = 25°C	I_{TSM} 10µs T_C = 25°C	r_T typ.	V_T Max.	$Q_{g(on)}$ typ.	t_{ri} typ. T_C = 25°C	V_{GK}(th) max.	Circuit Diagram	Package
	V	kA	kA	mW	V	nC	ns	V		
MMJX1H40N150	1500	15.5	6.4	1.2	6	99	100	5	L	MiniSMPD
MMIX1H60N150V1	1500	32	11.8	1.2	6	180	100	5	M	SMPD-X

ISOPLUS-DIL™

X026c
ISOPLUS-DIL™

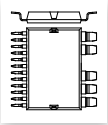

MTI...W..GC
MTC...W..GC
Surface Mount Device

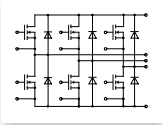

Part Number	V_{DS} max.	I_D $T_C = 25\ °C$	I_{D90} $T_C = 90\ °C$	$R_{DS(on)}$ typ. $T_J = 25\ °C$	C_{iss} typ.	Q_g typ.	R_{thJC}
	V	A	A	mW	nF	nC	K/W
FPO							
MTC120W55GC	55	160	120	2.2	7	110	1
MTI85W100GC	100	110	83	3.2	6.3	90	1.5

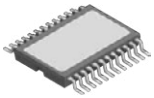

X026d
ISOPLUS-DIL™

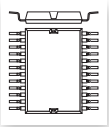

MTI...WX...GD
MTC...X...TGD
GMM...
Surface Mount Device

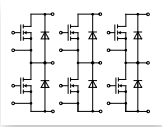

Part Number	V_{DS} max.	I_D $T_C = 25\ °C$	I_{D90} $T_C = 90\ °C$	$R_{DS(on)}$ typ. $T_J = 25\ °C$	C_{iss} typ.	Q_g typ.	R_{thJC}
	V	A	A	mW	nF	nC	K/W
FPO							
MTC120WX55GD	55	160	120	2.2	7	110	1
MTC120WX75GD	75	160	120	2.2	10.5	178	0.8
MTI200WX75GD		265	200	1.1	10.8	155	0.9
MTI85WX100GD	100	110	83	3.2	6.3	90	1.5
MTI145WX100GD		190	145	1.7	11	155	0.9
GMM3X60-015X2	150	50	38	19	5.8	97	1

©2023 Littelfuse, Inc

Potential Application Block Diagram Exmaple (for i4-PAC™)

3, 4, and 5 leaded packages for various circuit topologies and DCB base plate

- Electrical isolation of 2500 V
- Low thermal resistance
- Increased power and temperature cycling
- Saves PCB mounting area
- Replaces multiple discretes
- Reduces parasitic inductance and capacitance
- Reduces EMI
- Less weight

Solutions offered by IXYS
System implementation options

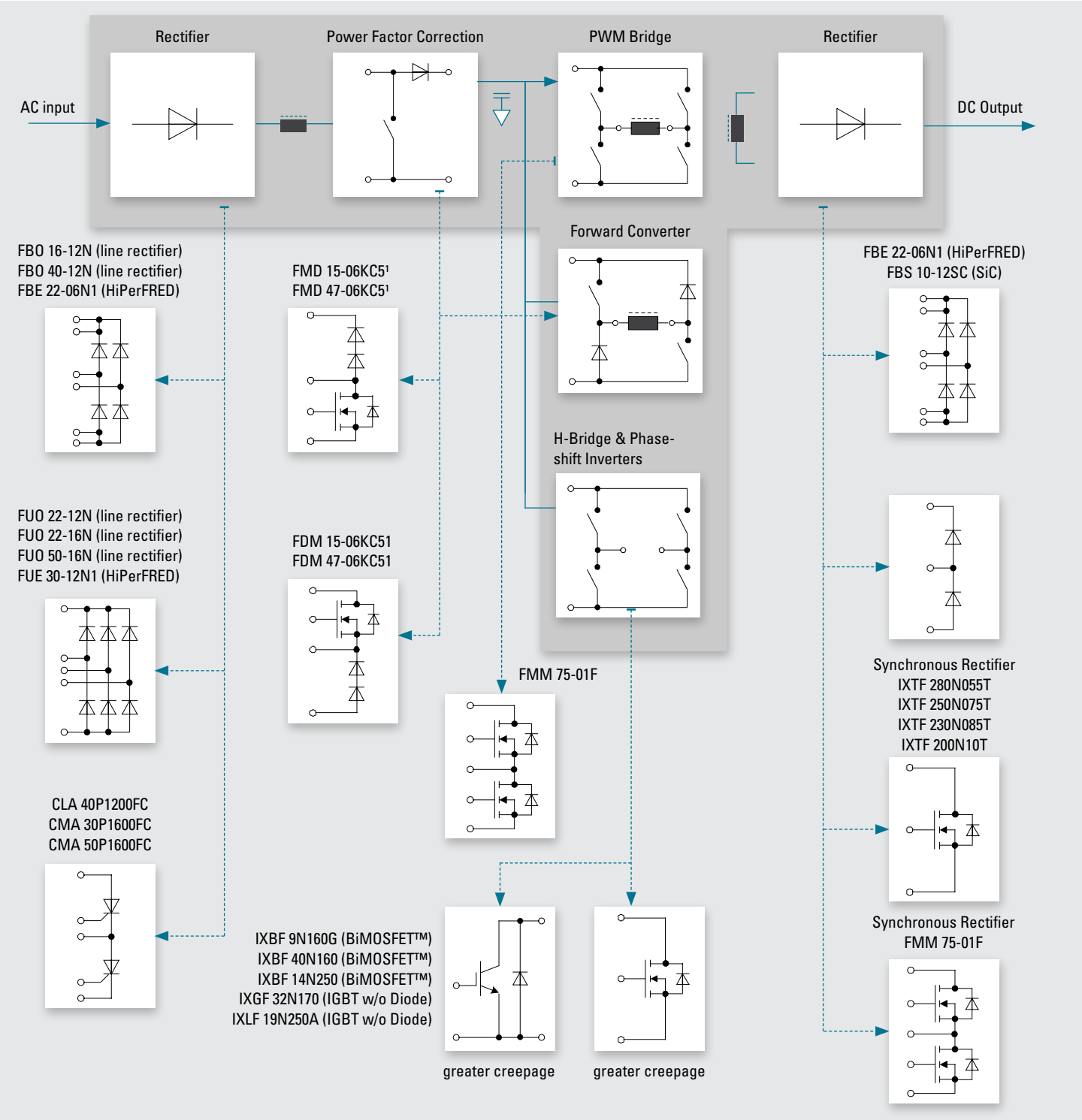

1 Powered by Infineon CoolMOS™ superjunction bare die

Featured Packages

X024a
ISOPLUS-i4pac(5)

X024b
ISOPLUS-i4pac(3sym)

X024e
ISOPLUS-i4pac(2sym)

X024b
ISOPLUS-i4pac(3sym)

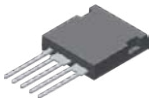

X024d
ISOPLUS-i4pac(5HC)

MOSFET

Part Number	Configuration	Circuit Diagram/Technology		V_{DSS}	I_{D25} T_C = 25 °C	$I_{D90/110}$ T_C = 90 °C (110 °C)	$R_{DS(on)}$ T_C = 25 °C typ.	Package
				V	A	A	mΩ	
IXTF200N10T	Single	A	Trench MOSFET	100	90	na	7	ISOPLUS-i4pac (5HC)
IXTF6N200P3	Single	A	Polar3™ High Voltage MOSFET	2000	4	(2.3)	<(4.2)	ISOPLUS-i4pac(3asym)
IXTF2N300P3		A	Polar3™ High Voltage MOSFET	3000	1.6	(0.9)	<(21)	
IXTF1N250		A	High Voltage MOSFET	2500	1	na	<(40)	
IXTF1R4N450	Single	A	High Voltage MOSFET	4500	1.4	na	<(40)	ISOPLUS-i4pac(3asym)
IXTF02N450		A	High Voltage MOSFET		0.2	na	<(625)	
IXTF1N450		A	High Voltage MOSFET		0.9	na	<(80)	
FMD15-06KC5[1]	Boost	C	MOSFET & HiPerDynFRED	600	15	11	150	ISOPLUS-i4pac(5)
FMM75-01F	Phase leg	B	HiPerFET	100	75	50	18	ISOPLUS-i4pac(5)
FMM60-02TF	Phase leg	B	Trench HiPerFET	200	33	na	32	ISOPLUS-i4pac(5)
FMM50-025TF		B	Trench HiPerFET	250	30	na	<60	

1 NFND. Replacement part MXB12R600DPHFC

IGBTs

Part Number	Configuration	Circuit Diagram/Technology		V_{CES}	I_{D25} T_C = 25 °C	$I_{D90/110}$ T_C = 90 °C (110 °C)	$V_{CE(sat)}$ typ T_C = 25 °C typ.	Package
				V	A	A	V	
IXYF30N170CV[1]	Single	F	High voltage XPT™ IGBT	1700	36	(20)	3.5	ISOPLUS-i4pac (3asym)
IXGF32N170		E	High voltage IGBT		44	(19)	2.7	
IXGF20N250	Single	E	High voltage IGBT	2500	23	14	<3.1	ISOPLUS-i4pac (3asym)
IXGF25N250		E	High voltage IGBT		30	(15)	<2.9	
IXYF16N250CV[1]	Single	F	High voltage XPT™ IGBT	2500	26	(14)	3.3	ISOPLUS-i4pac (3asym)
IXBF22N300	Single	F	BiMOSFET™	3000	38	22	2.2	ISOPLUS-i4pac (3asym)
IXBF32N300	Single	F	BiMOSFET™	3000	40	22	2.8	ISOPLUS-i4pac (3asym)
IXBF42N300	Single	F	BiMOSFET™	3000	60	(24)	2.5	ISOPLUS-i4pac (3asym)
IXBF55N300		F	BiMOSFET™		86	(34)	2.7	
IXYF30N450	Single	E	High voltage XPT™ IGBT	4500	23	(17)	3.2	ISOPLUS-i4pac (3asym)
IXYF40N450		E	High voltage XPT™ IGBT		60	(32)	3.2	

1 Not for new design

©2023 Littelfuse, Inc

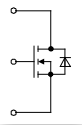
A

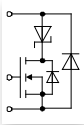
D

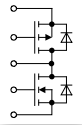
G

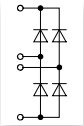
J

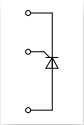
M

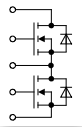
B

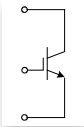
E

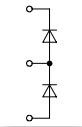
H

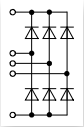
K

N

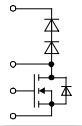
C

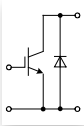
F

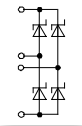
I

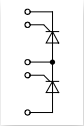
L

Part Number	Configuration	Circuit diagram/Technology		Voltage	$I_{D(AV)M}$ $T_C = 90°C$	Package
				V	A	
CS20-22MOF1	Single	M	Thyristor	2200	18	ISOPLUS-i4pac (3asym)
DNA30E2200FE	High voltage	N	Rectifier	2200	30	ISOPLUS-i4pac(2sym)
CS20-25MO1F		M	Thyristor	2500	18	ISOPLUS-i4pac (3asym)
CLA40P1200FC	Phase leg	L	Thyristor	2 × 1200	40	ISOPLUS-i4pac(5)
DSEE55-24N1F		H	HiPerFRED		55	ISOPLUS-i4pac(3sym)
CMA30P1600FC	Phase leg	L	Thyristor	2 × 1600	30	ISOPLUS-i4pac(5)
CMA50P1600FC		L	Thyristor		50	
DHH55-36N1F	Phase leg	H	Sonic-FRD	2 × 1800	50	ISOPLUS-i4pac(3sym)
FBE22-06N1	1-Phase bridge	J	HiPerFRED	600	20	ISOPLUS-i4pac(5)
FBS10-12SC		I	Si-Carbide	1200	10	ISOPLUS-i4pac(5)
FBO16-12N	1-Phase bridge	J	Rectifier	1200	22	ISOPLUS-i4pac(5)
FBO40-12N		J	Rectifier		40	
FUO22-12N	3-Phase bridge	K	Rectifier	1200	27	ISOPLUS-i4pac(5)
FUE30-12N1		K	HiPerFRED		30	
FUO22-16N	3-Phase bridge	K	Rectifier	1600	27	ISOPLUS-i4pac(5)
FUO50-16N		K	Rectifier		50	

The Insulated Gate Bipolar Transistor (IGBT) is a key component used in major industrial and automotive applications today. IXYS is one of the largest portfolios of IGBTs in terms of package, current, and voltage. Adapting to the different needs of various applications, IXYS offers optimized IGBTs for conduction and switching losses. These IGBTs come in A, B, and C switching classes. The portfolio includes both single IGBTs and co-pack IGBTs having anti-parallel diode inside the package. The A class is optimized for low frequency applications and has considerably less conduction losses. Class B and C IGBTs are optimized for medium and high-switching frequency applications.

IXYS IGBTs offer low thermal resistance $R_{th(j-c)}$ which helps simplify and enhance the overall thermal efficiency of the system. The industry-leading low gate charge Q_G requirement drastically reduces the gate driver requirements of the IGBTs, respectively.

The following table summarizes the IGBT portfolio.

IGBT Technology

IGBT Technologies and their Distinctive Characteristics
600 – 1200 V

IGBT Characteristics	XPT™ Gen3 Planar			XPT™ Gen3 Planar			XPT™ Gen4 Trench			XPT™ Gen5Trench		
Sub-family	IXA*	IXX*		IXY*			IXX* (650 V), IXY* (1200 V)			IXY*		
Switching class	–	B3	C3	A3	B3	C3	A4	B4	C4	A5	B5	C5
Speed	Medium	Medium	High	Low	Medium	High	Low	Medium	High	Low	Medium	High
Surge Currnet Capability	Medium	Medium		Medium			Medium (650 V), High (1200 V)			High		
Square RBSOA	Yes	Yes		Yes			Yes (650 V), No (1200 V)			Yes		
Short Circuit Rated	Yes	Yes		Yes	Yes (650 V) No (900 V, 1200 V)		Yes (650 V), No (1200 V)			No		
Voltage Class	1200 V	600 V		650 V, 900 V, 1200 V			650 V, 1200 V			650 V		

IGBT Technologies and their Distinctive Characteristics
1600 – 4500 V

IGBT Characteristics	XPT™ Gen3 Planar	XPT™ Gen3 Planar
Sub-family	IXY*	IXB*
Switching class	-	-
Speed	Medium	Medium
Surge Currnet Capability	Medium	Medium
Square RBSOA	No	No
Short Circuit Rated	No	No
Voltage Class	1700 – 4500 V	1600 – 3600 V

©2023 Littelfuse, Inc

IGBT Product Families

Xtreme Light Punch Through (XPT™) Planar IGBTs

These are the extremely rugged technology platform of IGBTs, which are ideal for critical applications that require low conduction and low switching losses with a 10 µs short circuit withstand capability. Either discrete or co-packaged with ultrafast soft recovery Sonic diodes. IXYS XPT™ IGBTs have lower saturation voltage $V_{CE(sat)}$ and low total switching energy (E_{on} + E_{off}). A large portfolio of module-packed Planar XPT™s is available for applications such as UPS, Motor Drive, and solar inverters.

Xtreme Light Punch Through (X2PT™) Planar IGBTs

These are the second generation of XPT™ IGBTs. Its features are 10 µs short circuit capability, 175°C ma × junction temperature, further reduced VCE(sat), and lower turn-off losses (Eoff), resulting in competitive performance that is comparable to the latest trench devices at reduced Rth. Thus, they are ideally suited for Motor Drive inverters.

Xtreme Light Punch Through (XPT™) Trench IGBTs

These are the latest developments from IXYS, starting at 650 V. This range features not only a low $V_{CE(sat)}$, but extremely low switching losses, making the platform attractive for fast switching applications whilest retaining good SOA rating and a positive temperature coefficient. Either discrete or co-packaged with ultrafast soft recovery sonic diodes. IXYS XPT™ IGBTs have industry leading efficiency at medium to high switching frequency.

Very High Voltage (2500 V–4000 V) IGBTs

IXYS offers a unique portfolio of discrete 2500 V, 3000 V, and 4000 V VHV IGBTs with collector current ratings spanning from 2 A to 75 A (T_C = 110˚C). The voltage and current ratings of these devices, coupled with simplified MOS gate-control, allow the system designer to greatly reduce the complexity of many high voltage switching designs. These IGBTs enable the use of a single device in systems whose circuits previously used multiple, cascaded, lower-voltage switches.

BiMOSFET™ IGBTs

IXYS BiMOSFET™s are devices that have combined strengths of MOSFETs and IGBTs. BiMOSFET™s feature a monolithic intrinsic diode that can reduce die count in many applications.

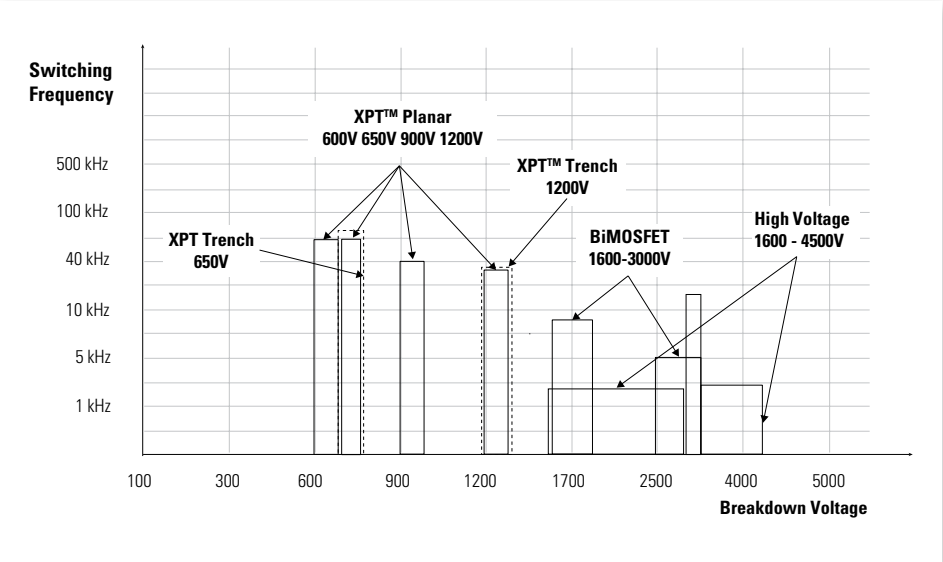

X005a
TO-220AB

X016a
ISOPLUS247™

X019a
TO-268AAHV

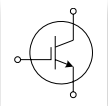
IXX...
IXY...

X011b
TO-263AB

X017a
TO-3P

X020a
TO-264

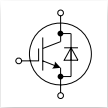
IXX...D1/H1
IXY...D1/H1

X014a
TO-247AD

X017c
TO-3PFP

X027a
SOT-227B miniBLOC

X015a
PLUS247

600V XPT™ Planar IGBTs

XPT™ = Xtreme Light Punch Through, short-circuit rated IGBTs

Part Number	V_{CES}	I_{C25} $T_C = 25$ °C	I_{C110} $T_C = 110$ °C	$V_{CE(sat)}$ $T_C = 25$ °C	t_{fi} typ. $T_J = 150$ °C	E_{off} typ. $T_J = 150$ °C	R_{thJC}	Diode	I_{F110} Diode $T_C = 110$ °C	R_{thJC} max. Diode	P_C	Package
	V	A	A	V	ns	mJ	K/W		A	K/W	W	
B3 Class (5–30 kHz Switching)												
IXXQ30N60B3M	600	33	19	1.85	180	0.7	1.66	–	–	–	90	TO-3PFP
IXXH30N60B3		60	30	1.85	180	0.7	0.55	–	–	–	270	TO-247AD
IXXH30N60B3D1		60	30	1.85	180	0.7	0.55	•	30	0.9	270	TO-247AD
IXXA50N60B3		120	50	1.8	190	1.2	0.25	–	–	–	600	TO-263AB
IXXH50N60B3		120	50	1.8	190	1.2	0.25	–	–	–	600	TO-247AD
IXXH50N60B3D1		120	50	1.8	190	1.2	0.25	•	30	0.9	600	TO-247AD
IXXP50N60B3		120	50	1.8	190	1.2	0.25	–	–	–	600	TO-220AB
IXXR100N60B3H1		145	68	1.8	200	2.8	0.31	•	–	0.62	400	ISOPLUS247™
IXXH75N60B3		160	75	1.85	170	2.2	0.2	–	–	–	750	TO-247AD
IXXH75N60B3D1		160	75	1.85	170	2.2	0,200	•	30	0.9	750	TO-247AD
IXXN100N60B3H1		170	100 (90°C)	1.8	200	2.8	0.25	•	50	0.42	500	SOT-227B miniBLOC
IXXK100N60B3H1		200	100 (100°C)	1.8	200	2.8	0.18	•	65	0.3	695	TO-64
IXXN200N60B3H1		200	98	1.7	215	3.45	0.16	•	30	0.7	780	SOT-227B miniBLOC
IXXX100N60B3H1		200	100 (100°C)	1.8	200	2.8	0.18	•	65	0.3	695	PLUS247
IXXH100N60B3		220	100	1.8	200	2.8	0.18	–	–	–	830	TO-247AD
IXXN200N60B3		280	160	1.7	215	3.45	0.16	–	–	–	940	SOT-227B miniBLOC
IXXK200N60B3		380	200	1.7	215	3.45	0.092	–	–	–	1630	TO-64
IXXX200N60B3		380	200	1.7	215	3.45	0.092	–	–	–	1630	PLUS247
IXXK300N60B3		550	300	1.6	200	3.7	0.065	–	–	–	2300	TO-64
IXXX300N60B3		550	300	1.6	200	3.7	0.065	–	–	–	2300	PLUS247
C3 Class (20–60 kHz Switching)												
IXXH30N60C3	600	60	30	2.2	32	0.4	0.55	–	–	–	270	TO-247AD
IXXH30N60C3D1		60	30	2.2	78	0.4	0.55	•	30	0.9	270	TO-247AD
IXXH50N60C3		100	50	2.3	90	0.48	0.25	–	–	–	600	TO-247AD
IXXH50N60C3D1		100	50	2.3	90	0.48	0.25	•	30	0.9	600	TO-247AD
IXXH75N60C3		150	75	2.3	80	1.07	0.2	–	–	–	750	TO-247AD
IXXH75N60C3D1		150	75	2.3	80	1.07	0.2	•	30	0.9	750	TO-247AD
IXXK100N60C3H1		170	100 (90°C)	2.2	115	1.4	0.18	•	65	0.3	695	TO-64
IXXX100N60C3H1		170	100 (90°C)	2.2	115	1.4	0.18	•	65	0.3	695	PLUS247
IXXH100N60C3		190	100	2.2	115	1.4	0.18	–	–	–	830	TO-247AD
IXXN200N60C3H1		200	98	2.1	90	2.1	0.16	•	30	0.7	780	SOT-227B miniBLOC
IXXK200N60C3		340	200	2.1	90	2.1	0.092	–	–		1630	TO-64
IXXX200N60C3		340	200	2.1	90	2.1	0.092	–	–	–	1630	PLUS247
IXXK300N60C3		510	300	2	90	2.35	0.065	–	–	–	2300	TO-64
IXXX300N60C3		510	300	2	90	2.35	0.065	–	–	–	2300	PLUS247

©2023 Littelfuse, Inc

650V XPT™ Planar IGBTs

XPT™ = Xtreme Light Punch Through, short-circuit rated IGBTs

Part Number	V_{CES}	I_{C25} T_C = 25 °C	I_{C110} T_C = 110 °C	$V_{CE(sat)}$ T_C = 25 °C	t_{fi} typ. T_J = 150 °C	E_{off} typ. T_J = 150 °C	R_{thJC}	Diode	I_{F110} Diode T_C = 110 °C	R_{thJC} max. Diode	P_C	Package
	V	A	A	V	ns	mJ	K/W		A	K/W	W	
A3 Class (up to 5 kHz Switching)												
IXYN100N65A3	650	170	100	1.8	160	2.4	0.25	–	–	–	600	SOT-227B miniBLOC
IXYH100N65A3		240	100	1.8	225	3.7	0.18	–	–	–	470	TO-247AD
IXYN300N65A3		470	300	1.6	175	7.3	0.1	–	–	–	1500	SOT-227B miniBLOC
IXYK300N65A3		600	300	1.6	175	7.3	0.065	–	–	–	2300	TO-264
IXYX300N65A3		600	300	1.6	175	7.3	0.065	–	–	–	2300	PLUS247
B3 Class (10–30 kHz Switching)												
IXYA20N65B3	650	58	20	2.1	147	0.76	0.65	–	–	–	230	TO-263AB
IXYH20N65B3		58	20	2.1	147	0.76	0.65	–	–	–	230	TO-247AD
IXYP20N65B3		58	20	2.1	147	0.76	0.65	–	–	–	230	TO-220AB
IXYH40N65B3		86	40	2	174	1.15	0.5	–	–	–	300	TO-247AD
IXYH40N65B3D1		86	40	2	174	1.15	0.5	•	50	0.6	300	TO-247AD
IXYH100N65B3		225	100	1.85	160	2.16	0.18	–	–	–	830	TO-247AD
IXYH120N65B3		340	120	1.9	196	2.2	0.11	–	–	–	–	TO-247AD
IXYK200N65B3		410	200	1.7	230	5.6	0.096	–	–	–	–	TO-264
IXYX200N65B3		410	200	1.7	230	5.6	0.096	–	–	–	–	PLUS247
C3 Class (20–60 kHz Switching)												
IXYP10N65C3	650	30	10	2.5	38	0.15	0.94	–	–	–	160	TO-220AB
IXYP15N65C3		38	15	2.5	42	0.24	0.75	–	–	–	200	TO-220AB
IXYA20N65C3		50	20	2.5	36	0.4	0.65	–	–	–	230	TO-263AB
IXYP10N65C3		30	10	2.5	38	0.15	0.94	–	–	–	160	TO-220AB
IXYA15N65C3D1		38	15	2.5	42	0.24	0.75	•	23	1.85	200	TO-263AB
IXYP15N65C3		38	15	2.5	42	0.24	0.75	–	–	–	200	TO-220AB
IXYP15N65C3D1		38	15	2.5	42	0.24	0.75	•	23	1.85	200	TO-220AB
IXYA20N65C3		50	20	2.5	36	0.4	0.65	–	–	–	230	TO-263AB
IXYA20N65C3D1		50	20	2.5	36	0.4	0.65	•	18	1.85	200	TO-263AB
IXYH20N65C3		50	20	2.5	36	0.4	0.65	–	–	–	230	TO-247AD
IXYP20N65C3D1		50	20	2.5	36	0.4	0.65	•	18	1.85	200	TO-220AB
IXYH30N65C3H1		60	30	2.7	30	0.41	0.55	•	29	0.8	270	TO-247AD
IXYH30N65C3		60	30	2.7	30	0.41	0.55	–	–	–	270	TO-247AD
IXYT30N65C3H1HV		60	30	2.7	30	0.41	0.55	•	29	0.8	270	TO-268AAHV
IXYP30N65C3		60	30	2.7	30	0.41	0.55	–	–	–	270	TO-220AB
IXYQ40N65C3D1		80	40	2.35	30	0.53	0.5	•	50	0.6	300	TO-3P
IXYH40N65C3		80	40	2.35	30	0.53	0.5	–	–	–	300	TO-247AD
IXYH40N65C3H1		80	40	2.35	80	0.46	0.5	•	40	0.6	300	TO-247AD
IXYH50N65C3H1		130	50	2.1	42	0.56	0.25	•	40	0.6	600	TO-247AD
IXYP50N65C3		132	50	2.1	32	0.7	0.25	–	–	–	600	TO-220AB
IXYH50N65C3		132	50	2.1	32	0.7	0.25	–	–	–	600	TO-247AD
IXYA50N65C3		132	50	2.1	32	0.7	0.25	–	–	–	600	TO-263AB
IXYN100N65C3H1		160	90	2.3	66	1.15	0.25	•	50	0.42	600	SOT-227B miniBLOC
IXYH75N65C3H1		170	75	2.3	58	1.3	0.2	•	62	0.45	750	TO-247AD
IXYH75N65C3		175	75	2.3	64	1.3	0.2	–	–	–	750	TO-247AD
IXYX100N65C3D1		200	100	2.3	66	1.15	0.18	•	67	0.36	830	PLUS247
IXYH100N65C3		200	100	2.3	66	1.15	0.18	–	–	–	830	TO-247AD
IXYK100N65C3D1		200	100	2.3	66	1.15	0.18	•	67	0.36	830	TO-264
IXYH120N65C3		260	120	2.8	60	0.7	0.11	–	–	–	–	TO-247AD

X005a
TO-220AB

X007a
TO-220ABFP

X014a
TO-247AD

X011c
TO-263ABHV

X014a
TO-247AD

X015a
PLUS247

X016a
ISOPLUS247™

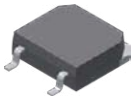
X019a
TO-268AAHV

X020a
TO-264

X027a
SOT-227B miniBLOC

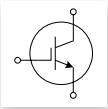
IXX...
IXY...

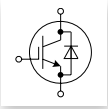
IXX...D1/H1
IXY...D1/H1

650 V XPT™ Trench IGBTs

XPT™ = Xtreme Light Punch Through, short-circuit rated IGBTs

Part Number	V_{CES}	I_{C25} T_C = 25 °C	I_{C110} T_C = 110 °C	$V_{CE(sat)}$ T_C = 25 °C	t_{fi} typ. T_J = 150 °C	E_{off} typ. T_J = 150 °C	R_{thJC}	Diode	I_{F110} Diode T_C = 110 °C	R_{thJC} max. Diode	P_C	Package
	V	A	A	V	ns	mJ	K/W		A	K/W	W	
A4 Class (up to 5 kHz Switching)												
IXXN200N65A4	650	440	200	1.8	190	8	0.12	–	–	–	1250	SOT-227B miniBLOC
A5 Class (up to 5 kHz Switching)												
IXYP60N65A5	650	134	60	1.35	240	2.5	0.38	–	–	–	395	TO-220AB
IXYH90N65A5		220	90	1.35	360	5	0.23	–	–	–	650	TO-247AD
IXYH120N65A5		290	120	1.35	290	4.7	0.18	–	–	–	830	TO-247AD
B4 Class (5–30 kHz Switching)												
IXXP12N65B4	650	38	12	1.95	110	0.38	0.94	–	–	–	160	TO-220AB
IXXP12N65B4D1		38	12	1.95	110	0.38	0.94	•	11	2.3	160	TO-220AB
IXXH30N65B4		70	30	2	60	1.07	0.65	–	–	–	230	TO-247AD
IXXH40N65B4		115	40	2	116	1.3	0.33	–	–	–	455	TO-247AD
IXXH60N65B4		120	60	2.2	88	1.8	0.33	–	–	–	536	TO-247AD
IXXH60N65B4H1		120	60	2.2	88	1.8	0.33	•	47	0.6	536	TO-247AD
IXXH40N65B4H1		123	40	2	73	1.4	0.33	•	40	0.6	455	TO-247AD
IXXR110N65B4H1		150	70	2.2	105	1.4	0.33	•	48	0.7	455	ISOPLUS247™
IXXH80N65B4		160	80	2.1	94	2.7	0.24	–	–	–	625	TO-247AD
IXXH80N65B4H1		160	80	2.1	102	3.1	0.24	•	62	0.45	625	TO-247AD
IXXN110N65B4H1		230	110	2.1	110	2.16	0.2	•	70	0.42	750	SOT-227B miniBLOC
IXXH110N65B4		250	110	2.1	110	2.16	0.17	–	–	–	880	TO-247AD
IXXK110N65B4H1		250	110	2.1	110	2.16	0.17	•	78	0.38	880	TO-264
IXXX110N65B4H1		250	110	2.1	110	2.16	0.17	•	78	0.38	880	PLUS247
IXXK160N65B4		310	160	1.8	160	2.36	0.16	–	–	–	940	TO-264
IXXX160N65B4		310	160	1.8	160	2.36	0.16	–	–	–	940	PLUS247
IXXH140N65B4		340	140	1.9	100	3.9	0.125	–	–	–	1200	TO-247AD
IXXX140N65B4H1		350	140	1.9	100	3.9	0.125	•	72	0.24	1200	PLUS247
IXXK200N65B4		480	200	1.7	120	5	0.092	–	–	–	1630	TO-264
IXXX200N65B4		480	200	1.7	120	2.54	0.092	–	–	–	1630	PLUS247
IXXN340N65B4		520	340 (90°C)	1.7	110	2.54	0.1	–	–	–	1500	SOT-227B miniBLOC
C4 Class (20–60 kHz Switching)												
IXXH60N65C4	650	125	60	2.4	54	1.5	0.33	–	–	–	536	TO-247AD
IXXN110N65C4H1		210	110	2.35	40	0.9	0.2	•	70	0.42	750	SOT-227B miniBLOC
IXXH110N65C4		235	110	2.35	40	0.9	0.17	–	–	–	880	TO-247AD
IXXK160N65C4		290	160	2.1	57	1.3	0.16	–	–	–	940	TO-264
IXXX160N65C4		290	160	2.1	57	1.3	0.16	–	–	–	940	PLUS247
IXXH140N65C4		320	160	2.3	63	2.5	0.125	–	–	–	1200	TO-247AD

©2023 Littelfuse, Inc

1200 V XPT™ Trench IGBTs

XPT™ = Xtreme Light Punch Through, short-circuit rated IGBTs

Part Number	V_{CES}	I_{C25} T_C = 25 °C	I_{C110} T_C = 110° C	$V_{CE(sat)}$ T_C = 25 °C	t_{fi} typ. T_J = 125 °C	E_{off} typ. T_J = 120 °C	R_{thJC}	Diode	I_{F110} Diode T_C = 110 °C	R_{thJC} max. Diode	P_C	Package
	V	A	A	V	ns	mJ	K/W		A	K/W	W	
A4 Class (up to 5 kHz Switching)												
IXYA20N120A4HV	1200	80	20	1.9	286	4.85	0.4	–	–	–	375	TO-263ABHV
IXYP20N120A4		80	20	1.9	286	4.85	0.4	–	–	–	375	TO-220AB
IXYA30N120A4HV		106	30	1.9	270	5.6	0.3	–	–	–	500	TO-263ABHV
IXYH30N120A4		106	30	1.9	270	5.6	0.3	–	–	–	500	TO-247AD
IXYP30N120A4		106	30	1.9	270	5.6	0.3	–	–	–	500	TO-220AB
IXYH40N120A4		150	40	1.8	365	8.3	0.22	–	–	–	680	TO-247AD
IXYT40N120A4HV		150	40	1.8	365	8.3	0.22	–	–	–	680	TO-268AAHV
IXYT55N120A4HV		175	55	1.8	270	8.8	0.23	–	–	–	650	TO-268AAHV
IXYH55N120A4		175	55	1.8	270	8.8	0.23	–	–	–	650	TO-247AD
IXYT85N120A4HV		300	85	1.8	280	13.7	0.13	–	–	–	1150	TO-268AAHV
IXYH85N120A4		300	85	1.8	280	13.7	0.13	–	–	–	1150	TO-247AD
IXYK110N120A4		375	140	1.8	320	20	0.1	–	–	–	1360	TO-264
IXYN110N120A4		375	140	1.8	320	20	0.14	–	–	–	830	SOT0227B miniBLOC
IXYX110N120A4		375	140	1.8	320	20	0.1	–	–	–	1360	PLUS247
IXYK140N120A4		480	140	1.7	320	20	0.1	–	–	–	1500	TO-264
IXYN140N120A4		480	140	1.7	320	20	0.14	–	–	–	1070	SOT0227B miniBLOC
IXYX140N120A4		480	140	1.7	320	20	0.1	–	–	–	1500	PLUS247
B4 Class (5–30 kHz Switching)												
IXYA20N120B4HV	1200	76	20	2.1	170	2.7	0.4	–	–	–	375	TO-263ABHV
IXYP20N120B4		76	20	2.1	170	2.7	0.4	–	–	–	375	TO-220AB
IXYH30N120B4		100	30	2.1	190_	4	0.3	–	–	–	500	TO-247AD
IXYH40N120B4		136	40	2.1	190	4.4	0.22	–	–	–	680	TO-247AD
IXYK110N120B4		340	110	2.1	210	6.45	0.11	–	–	–	1360	TO-264
IXYX110N120B4		340	110	2.1	210	6.45	0.11	–	–	–	1360	PLUS247
IXYH40N120B4H1		112	40	2.1	190	4.4	0.25	•	32	0.35	600	TO-247AD
IXYH55N120B4H1		138	55	2.1	340	4.5	0.23	•	32	0.35	650	TO-247AD
IXYN110N120B4H1		218	110	2.1	210	6.45	0.18	•	74	0.41	830	SOT227B miniBLOC
C4 Class (20–50 kHz Switching)												
IXYA20N120C4HV	1200	68	20	2.5	86	1.6	0.4	–	–	–	375	TO-263ABHV
IXYP20N120C4		68	20	2.5	86	1.6	0.4	–	–	–	375	TO-220AB
IXYH30N120C4		94	30	2.4	100	2.7	0.3	–	–	–	500	TO-247AD
IXYH40N120C4		120	40	2.5	80	2.65	0.22	–	–	–	680	TO-247AD
IXYH55N120C4		140	55	2.5	123	2.5	0.23	–	–	–	650	TO-247AD
IXYH85N120C4		160	85	2.5	112	3.3	0.13	–	–	–	1150	TO-247AD
IXYK110N120C4		310	110	2.4	90	3.2	0.11	–	–	–	1360	TO-264
IXYN110N120C4		220	110	2.4	90	3.2	0.17	–	–	–	830	SOT0227B miniBLOC
IXYX110N120C4		310	110	2.4	110	3.2	0.11	–	–	–	1360	PLUS247
IXYH40N120C4H1		110	40	2.5	80	2.65	0.22	•	32	0.35	680	TO-247AD
IXYH55N120C4H1		126	55	2.5	123	2.5	0.35	•	37	0.35	650	TO-247AD
IXYN85N120C4H1		150	85	2.5	110	3.3	0.25	•	74	0.41	600	SOT227B miniBLOC
IXYK85N120C4H1		220	85	2.5	110	3.3	0.13	•	140	0.16	1150	TO-264
IXYN110N120C4H1		210	110	2.4	90	3.2	0.18	•	74	0.41	830	SOT227B miniBLOC

X004
TO-252AA

X005a
TO-220AB

X011b
TO-263AB

X011c
TO-263ABHV

X014a
TO-247AD

X014c
TO-247HV

X015a
PLUS247

X015c
PLUS247 HV

X016a
ISOPLUS247™

X019
TO-268AA

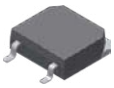
X019a
TO-268AAHV

X020a
TO-264

X021a
PLUS264

X022e
ISOPLUS264™

X027a
SOT-227B miniBLOC

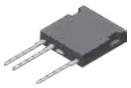
X024c
ISOPLUS
i4-PAC™

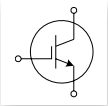
IXX...
IXY...

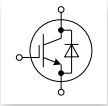
IXX...D1/H1
IXY...D1/H1

XPT™ Planar IGBT

XPT™ = Xtreme Light Punch Through

Part Number	V_{CES}	I_{C25} T_C = 25 °C	I_{C110} T_C = 110 °C	$V_{CE(sat)}$ T_C = 25 °C	t_{fi} typ. T_J = 150 °C	E_{off} typ. T_J = 150 °C	R_{thJC}	Diode	I_{F110} Diode T_C = 110 °C	R_{thJC} max. Diode	P_C	Package
	V	A	A	V	ns	mJ	K/W		A	K/W	W	
1700V XPT™ Planar IGBTs												
IXYH10N170C	1700	36	10	4.1	94	0.9	0.53	–	–	–	280	TO-247AD
IXYH10N170CV1		36	10	4.1	94	0.9	0.53	•	22	0.7	280	TO-247AD
IXYF30N170CV1		36	20	4	134	3.5	0.65	•	20	0.86	230	ISOPLUS i4-PAC™
IXYH16N170C		40	16	3.8	140	1.95	0.48	–	–	–	310	TO-247AD
IXYH16N170CV1		40	16	3.8	140	1.95	0.48	•	22	0.7	310	TO-247AD
IXYH24N170C		58	24	4	140	2.66	0.3	–	–	–	500	TO-247AD
IXYH24N170CV1		58	24	4	140	2.66	0.3	•	28	0.55	500	TO-247AD
IXYN30N170CV1		80	30	4	134	3.5	0.22	•	33	0.43	680	SOT-227B miniBLOC
IXYL50N170CV1		90	46	3.7	160	8.2	0.26	•	26	0.83	580	ISOPLUS264™
IXYH30N170C		100	30	4	134	3.5	0.16	–	–	–	937	TO-247AD
IXYK30N170CV1		100	30	4	134	3.5	0.16	•	38	0.36	937	To-264
IXYX30N170CV1		100	30	4	134	3.5	0.16	•	38	0.36	937	PLUS247
IXYN50N170CV1		120	50	3.7	160	8.2	0.17	•	42	0.42	880	SOT-227B miniBLOC
IXYX50N170C		178	50	3.7	160	8.2	0.1	–	–	–	1500	PLUS247
2500V XPT™ Planar IGBTs												
IXYF16N250CV1	2500	26	14	4	236	4.4	0.83	•	9	1.5	180	ISOPLUS i4-PAC™
IXYA12N250CHV		28	12	4.5	138	1.95	0.48	–	–	–	310	TO-263ABHV
IXYH12N250CHV		28	12	4.5	138	1.95	0.48	–	–	–	310	TO-247HV
IXYH12N250CV1HV		28	12	4.5	138	1.95	0.48	•	14	0.8	310	TO-247HV
IXYT12N250CV1HV		28	12	4.5	138	1.95	0.48	•	14	0.8	310	TO-268AAHV
IXYA8N250CHV		29	8	4	128	1.2	0.53	–	–	–	280	TO-263ABHV
IXYH8N250CHV		29	8	4	128	1.2	0.53	–	–	–	280	TO-247HV
IXYH8N250CV1HV		29	8	4	128	1.2	0.53	•	14	0.8	280	TO-247HV
IXYH16N250CV1HV		38	16	4	236	4.4	0.3	•	14	0.8	500	TO-247HV
IXYL40N250CV1		80	40	4	250	11.5	0.26	•	23	0.83	577	ISOPLUS264™
IXYH25N250CHV		95	25	4	350	10.5	0.16	–	–	–	937	TO-247HV
IXYT25N250CHV		95	25	4	350	10.5	0.16	–	–	–	937	TO-268AAHV
IXYX25N250CV1		95	25	4	350	10.5	0.16	•	30	0.32	937	PLUS247
IXYX25N250CV1HV		95	25	4	350	10.5	0.16	•	30	0.32	937	PLUS247 HV
IXYX40N250CHV		154	40	4	250	11.5	0.1	–	–	–	1500	PLUS247 HV

©2023 Littelfuse, Inc

900/1200 V XPT™ Planar IGBTs

Part Number	V_{CES}	I_{C25} T_C = 25 °C	I_{C110} T_C = 110 °C (90 °C)	$V_{CE(sat)}$ T_C = 25 °C	t_{fi} typ. T_J = 125 °C (150 °C)	E_{off} typ. T_J = 125 °C (150 °C)	R_{thJC}	Diode	I_{F110} Diode T_C = 110 °C	R_{thJC} max. Diode	P_C	Package
	V	A	A	V	ns	mJ	K/W		A	K/W	W	
C3 Class (20–50 kHz Switching)												
IXYA8N90C3D1	900	20	8	2.5	163	0.22	1.2	•	12	2.5	125	TO-263AB
IXYP8N90C3		20	8	2.5	163	0.22	1.2	–	–	–	125	TO-220AB
IXYP8N90C3D1		20	8	2.5	163	0.22	1.2	•	12	2.5	125	TO-220AB
IXYY8N90C3		20	8	2.5	163	0.22	1.2	–	–	–	125	TO-252AA
IXYH24N90C3		44	24	2.7	130	0.55	0.62	–	–	–	240	TO-247AD
IXYH24N90C3D1		44	(24)	2.7	130	0.55	0.62	•	15	1.6	200	TO-247AD
IXYH40N90C3D1		90	40	2.5	150	1.2	0.25	•	25	0.9	500	TO-247AD
IXYH40N90C3		105	40	2.5	150	1.2	0.25	–	–	–	600	TO-247AD
IXYN80N90C3H1		115	(70)	2.7	(98)	(2.5)	0.25	•	42	0.42	500	SOT-227B miniBLOC
IXYH60N90C3		140	60	2.7	(165)	(2.15)	0.2	–	–	–	750	TO-247AD
IXYH80N90C3		165	80	2.7	(98)	(2.5)	0.18	–	–	–	830	TO-247AD
IXYT80N90C3		165	80	2.7	(98)	(2.5)	0.18	–	–	–	830	TO-268AA
IXYK140N90C3		310	140	2.7	(125)	(5)	0.09	–	–	–	1630	TO-264
IXYX140N90C3		310	140	2.7	(125)	(5)	0.09	–	–	–	1630	PLUS247
B3 Class (5–30 kHz Switching)												
IXYH40N120B3D1	1200	86	40	2.9	206	2.05	0.26	•	25	0.9	480	TO-247AD
IXYH40N120B3		96	40	2.9	206	2.05	0.26	–	–	–	577	TO-247AD
IXYN100N120B3H1		165	76	2.6	(260)	(10.1)	0.18	•	42	0.42	690	SOT-227B miniBLOC
IXYK100N120B3		225	100	2.6	(260)	(10.1)	0.13	–	–	–	1150	TO-264
IXYX100N120B3		225	100	2.6	(260)	(10.1)	0.13	–	–	–	1150	PLUS247
IXYK120N120B3		320	120	2.2	(406)	(27.9)	0.1	–	–	–	1500	TO-264
IXYX120N120B3		320	120	2.2	(407)	(27.9)	0.1	–	–	–	1500	PLUS247
C3 Class (20–50 kHz Switching)												
IXYH20N120C3D1	1200	36	17	3.4	(105)	(0.7)	0.54	•	23	0.9	230	TO-247AD
IXYT20N120C3D1HV		36	17	3.4	(105)	(0.7)	0.54	•	23	0.9	230	TO-268AAHV
IXYA20N120C3HV		40	20	3.4	(105)	(0.7)	0.54	–	–	–	278	TO-263ABHV
IXYH20N120C3		40	20	3.4	(105)	(0.7)	0.54	–	–	–	278	TO-247AD
IXYP20N120C3		40	20	3.4	(105)	(0.7)	0.54	–	–	–	278	TO-220AB
IXYR50N120C3D1		56	(32)	4	(60)	(1.4)	0.43	•	25	0.9	290	ISOPLUS247™
IXYH30N120C3D1		66	30	4	88	0.9	0.3	•	25	0.9	416	TO-247AD
IXYH30N120C3		75	30	3.3	(140)	(1.6)	0.3	–	–	–	500	TO-247AD
IXYP30N120C3		75	30	3.3	(140)	(1.6)	0.3	–	–	–	500	TO-220AB
IXYH40N120C3D1		80	(40)	3.5	(143)	(2.1)	0.26	•	25	0.9	480	TO-247AD
IXYH40N120C3		90	40	3.5	(143)	(2.1)	0.26	–	–	–	577	TO-247AD
IXYH50N120C3D1		90	50**	4	(60)	(1.4)	0.2	•	25	0.9	625	TO-247AD
IXYH50N120C3		100	50	3.5	60	1.4	0.2	–	–	–	750	TO-247AD
IXYR100N120C3		104	58	3.5	125	3.55	0.31	–	–	–	484	ISOPLUS247™
IXYN82N120C3H1		105	46	3.2	95	3.7	0.25	•	42	0.42	500	SOT-227B miniBLOC
IXYN82N120C3		120	66	3.2	95	3.7	0.25	–	–	–	600	SOT-227B miniBLOC
IXYN100N120C3H1		134	62	3.5	125	3.55	0.18	•	42	0.42	690	SOT-227B miniBLOC
IXYN100N120C3		152	86	3.5	125	3.55	0.18	–	–	–	830	SOT-227B miniBLOC
IXYB82N120C3H1		164	82	3.2	95	3.7	0.12	•	42	0.35	1040	ISOPLUS i4-PACTM
IXYK100N120C3		188	100	3.5	125	3.55	0.13	–	–	–	–	TO-264
IXYX100N120C3		188	100	3.5	125	3.55	0.13	–	–	–	–	PLUS247
IXYH82N120C3		200	82	3.2	95	3.7	0.12	–	–	–	–	TO-247AD
IXYK120N120C3		240	120	3.2	(120)	(7.2)	0.1	–	–	–	1500	TO-264
IXYX120N120C3		240	120	3.2	(120)	(7.2)	0.1	–	–	–	1500	PLUS247
IXYN120N120C3		240	120	3.2	(120)	(7.2)	0.13	–	–	–	1200	SOT-227B miniBLOC

** TC = 100°C

X004
TO-252AA

X014a
TO-247AD

X019
TO-268AA

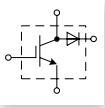
IXA...R...

X005a
TO-220AB

X015a
PLUS247

X020a
TO-264

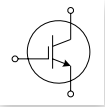
IXX...
IXY...

X011b
TO-263AB

X016a
ISOPLUS247™

X027a
SOT-227B miniBLOC

X011c
TO-263ABHV

X016c
ISO247™

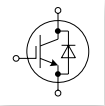
IXX...D1/H1
IXY...D1/H1

XPT™ IGBT

XPT™ = Xtreme Light Punch Through

Part Number	V_{CES}	I_{C25} IGBT T_C = 25 °C	I_{C110} IGBT T_C = 110 °C	$V_{CE(sat)}$ typ. IGBT T_C = 25 °C	E_{off} IGBT T_J = 125 °C	R_{thJC} IGBT	Diode	I_{F100} Diode T_J = 100 °C	Package
	V	A	A	V	mJ	K/W		A	
1200 V XPT™ IGBT									
IXA4IF1200UC	1200	9	5	1.8	0.25	2.7	•	6	TO-252AA
IXA4IF1200TC		9	5	1.8	0.25	2.7	•	6	TO-268AA
IXA12IF1200HB		20	13	1.8	1.1	1.5	•	14	TO-247AD
IXA12IF1200PB		20	13	1.8	1.1	1.5	•	14	TO-220AB
IXA12IF1200TC		20	13	1.8	1.1	1.5	•	14	TO-268AA
IXA17IF1200HJ		28	18	1.8	1.7	1.26	•	19	ISOPLUS247™
IXA20IF1200HB		38	22	1.8	1.7	0.76	•	24	TO-247AD
IXA20I1200PB		38	22	1.8	1.7	0.76	–	–	TO-220AB
IXA20I1200PZ		38	22	1.8	1.7	0.76	–	–	TO-263ABHV
IXA27IF1200HJ		43	24	1.8	3	0.84	•	25	ISOPLUS247™
IXA33IF1200HB		58	34	1.8	3	0.5	•	33	TO-247AD
IXA37IF1200HJ		58	33	1.8	4.1	0.64	•	25	ISOPLUS247™
IXA45IF1200HB		78	45	1.8	4.1	0.38	•	33	TO-247AD
IXA55I1200HJ		84	54	1.8	5.5	0.43	–	–	ISOPLUS247™
IXA60IF1200NA		88	56	1.8	5.5	0.43	•	51	SOT-227B miniBLOC
IXA70I1200NA		100	65	1.8	5.5	0.35	–	–	SOT-227B miniBLOC
1200 V Fast Trench IGBT									
ITF48IF1200HR	1200	72	56 (80°C)	2.05	2.4 (150°C)	0.38	•	(80°C) 50	ISO247™
FPO									
IXG70IF1200NA	1200	130	86	1.8	5.3 (150°C)	0.38	•	71	SOT-227B miniBLOC

©2023 Littelfuse, Inc

600 V, 1000 V, and 1200 V IGBTs

Part Number	V_{CES}	I_{C25} $T_C = 25$ °C	I_{C110} $T_C = 110$ °C	$V_{CE(sat)}$ max. $T_C = 25$ °C	t_{fi} typ. $T_J = 125$ °C	E_{off} typ. $T_J = 125$ °C	R_{thJC} max.	Diode	I_{F110} Diode $T_C = 110$ °C	R_{thJC} max. Diode	P_C	Package
	V	A	A	V	ns	mJ	K/W		A	K/W	W	
A4 Class (5–20 kHz Switching)												
IXGH48N60A3D1	1200	75	48	1.35	224	5.6	0.42	•	–	0.9	300	TO-247AD
IXGH72N60A3		75	72	1.35	250	6.5	0.23	–	–	–	540	TO-247AD
IXGT72N60A3		75	72	1.35	250	6.5	0.23	–	–	–	540	TO-268AA
IXGX120N60A3		200	120	1.35	260	10.4	0.16	–	–	–	780	PLUS247
IXGK320N60A3		320	210	1.25	740	na	0.13	–	–	–	1000	TO-264a
IXGN320N60A3		320	170	1.25	740	na	0.17	–	–	–	735	SOT-227B miniBLOC
IXGN400N60A3		400	190	1.25	270	na	0.15	–	–	–	830	SOT-227B miniBLOC
IXGA48N60A3		na	48	1.35	224	5.6	0.42	–	–	–	300	TO-263AB
IXGH48N60A3		na	48	1.35	224	5.6	0.42	–	–	–	300	TO-247AD
IXGP36N60A3		na	36	1.4	325	5.3	0.56	–	–	–	220	TO-220AB
IXGP48N60A3		na	48	1.35	224	5.6	0.42	–	–	–	300	TO-220AB
IXGT32N100A3		75	32	2.2	540	13	0.42	–	–	–	300	TO-268AA
IXGA12N120A3		22	na	3	1035	na	1.25	–	–	–	100	TO-263AB
IXGH12N120A3		22	na	3	1035	na	1.25	–	–	–	100	TO-247AD
IXGP12N120A3		22	na	3	1035	na	1.25	–	–	–	100	TO-220AB
IXGA20N120A3		40	20	2.5	715	10.1	0.69	–	–	–	180	TO-263AB
IXGH20N120A3		40	20	2.5	715	10.1	0.69	–	–	–	180	TO-247AD
IXGP20N120A3		40	20	2.5	715	10.1	0.69	–	–	–	180	TO-220AB
IXGH32N120A3		75	na	2.35	1240	na	0.42	–	–	–	300	TO-247AD
IXGT32N120A3		75	32	2.35	1240	na	0.42	–	–	–	300	TO-268AA
IXGK55N120A3H1		125	55	2.3	282	29	0.27	•	–	0.42	460	TO-264a
IXGX55N120A3H1		125	55	2.3	282	29	0.27	•	–	0.42	460	PLUS247
IXGK120N120A3		240	120	2.2	325	58	0.15	–	–	–	830	TO-264a
IXGX120N120A3		240	120	2.2	325	58	0.15	–	–	–	830	PLUS247
IXGK82N120A3		260	82	2.05	780	22.5	0.1	–	–	–	1250	TO-264a
IXGX82N120A3		260	82	2.05	780	22.5	0.1	–	–	–	1250	PLUS247

X011c
TO-263ABHV

X015c
PLUS247HV

X022e
ISOPLUS264™

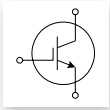
IX...

X014a
TO-247AD

X016a
ISOPLUS247™

X024c
ISOPLUS i4-PAC™

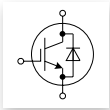
IXG...H1

X014c
TO-247HV

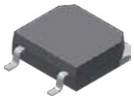
X019a
TO-268AAHV

X027a
SOT-227B miniBLOC

X015a
PLUS247

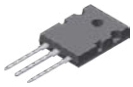
X020a
TO-264

Very High Voltage NPT IGBTs

2.5 kV – 4.5 kV NPT IGBT

Part Type	V_{ce}	I_{C25} T_C = 25 °C	I_{C110} T_C = 90 °C (100 °C) 110 °C	$V_{CE(sat)}$ max. T_C = 25 °C	t_{fi} typ. T_J = 25 °C	E_{off} typ. T_J = 125 °C	R_{thJC} IGBT	P_C	Package
	V	A	A	V	ns	mJ	K/W	W	
IXGF20N250		23	[14]	3.1	930	na	1.25	100	ISOPLUS i4-PAC™
IXGA20N250HV		30	12	3.1	930	na	0.83	150	TO-263ABHV
IXGF25N250		30	15	2.9	200	na	1.1	114	ISOPLUS i4-PAC™
IXGH25N250		60	25	2.9	200	na	0.5	250	TO-247AD
IXGT25N250	2500	60	25	2.9	200	na	0.5	250	TO-268AA
IXGT25N250HV		60	25	2.9	200	na	0.5	250	TO-268AAHV
IXGL75N250		110	[65]	2.9	455	na	0.29	430	ISOPLUS264™
IXGK75N250		170	75	2.7	455	na	0.16	780	TO-264
IXGX75N250		170	75	2.7	455	na	0.16	780	PLUS247
IXEL40N400	4000	90	40	3.5	425	205	0.26	380	ISOPLUS264™
IXG50I4500KN	4500	74	-42	3.2	1350	73	0.34	368	ISOPLUS264™

XPT Very High Voltage IGBTs

Part Type	V_{ce}	I_{C25} T_C = 25 °C	I_{C110} T_C = 90 °C (100 °C) 110 °C	$V_{CE(sat)}$ max. T_C = 25 °C	t_{fi} typ. T_J = 25 °C	E_{off} typ. T_J = 125 °C	R_{thJC} IGBT	P_C	Package
	V	A	A	V	ns	mJ	K/W	W	
IXYF30N450		23	17	3.9	1220	na	0.54	230	ISOPLUS i4-PAC™
IXYT30N450HV		60	30	3.9	1220	na	0.29	430	TO-268AAHV
IXYF40N450	4500	60	32	3.9	1120	na	0.43	290	ISOPLUS i4-PAC™
IXYH30N450HV		60	30	3.9	1220	na	0.29	430	TO-247HV
IXYL60N450		90	38	3.3	1360	na	0.3	417	ISOPLUS264™
IXYX40N450HV		95	40	3.9	1120	na	0.19	660	PLUS247HV
IXG20I3300FB	3300	48	20	3.0	480	6.1	0.50	250	ISOPLUS i4-PAC™
IXYF30N400		39	16	5.5	250	na	0.66	190	ISOPLUS i4-PAC™
IXYF20N400C	4000	29	13	4.2	190	na	0.66	190	ISOPLUS i4-PAC™
IXYF30N400V1		39	16	3.3	250	na	0.66	190	ISOPLUS i4-PAC™

©2023 Littelfuse, Inc

Reverse Conducting IGBTs (BiMOSFET™) 1.7 kV–2.5 kV

Part Number	V_{ce}	I_{C25} T_C = 25 °C	I_C T_C = 110 °C	$V_{CE(sat)}$ typ. max. T_C = 25 °C	Q_g typ.	t_f (t_{fi}) typ. T_J = 125 °C	R_{thJC} IGBT	Package
	V	A	A	V	ns	mJ	K/W	
IXBH6N170	1700	12	6	2.84	17	600	1.65	TO-247AD
IXBT6N170		12	6	2.84	17	600	1.65	TO-268AA
IXBA16N170AHV		16	10	–	65	–	0.83	TO-263ABHV
IXBH16N170A		16	10	–	65	–	0.83	TO-247AD
IXBT16N170A		16	10	–	65	–	0.83	TO-268AA
IXBT16N170AHV		16	10	–	65	–	0.83	TO-268AAHV
IXBH10N170		20	10	3.4	30	–	0.89	TO-247AD
IXBT10N170		20	10	3.4	30	–	0.89	TO-268AA
IXBN42N170A		38	21	5.2	188	–	0.4	SOT-227B miniBLOC
IXBH16N170		40	16	–	72	705	0.5	TO-247AD
IXBH42N170A		42	21	5.2	188	–82	0.35	TO-247AD
IXBT42N170A		42	21	5.2	188	–82	0.35	TO-268AA
IXBR42N170		57	32	–	188	740	0.62	ISOPLUS247™
IXBH24N170		60	24	–	140	960	0.5	TO-247AD
IXBT24N170		60	24	–	140	960	0.5	TO-268AA
IXBH42N170		80	42	–	188	740	0.35	TO-247AD
IXBT42N170		80	42	–	188	740	0.35	TO-268AA
IXBX75N170A		110	65	4.95	358	–175	0.12	PLUS247
IXBN75N170		145	75	2.6	350	580	0.2	SOT-227B miniBLOC
IXBK75N170		200	75	2.6	350	580	0.12	TO-264
IXBX75N170		200	75	2.6	350	580	0.12	PLUS247
IXCH36N250	2500	73	36	2.6	177	900	0.21	TO-247AD
IXCK36N250		73	36	2.6	177	900	0.21	TO-264
IXBL64N250		116	46	2.5	400	175	0.25	ISOPLUS264™
IXBK64N250		156	64	2.5	400	175	0.17	TO-264
IXBX64N250		156	64	2.5	400	175	0.17	PLUS247

Reverse Conducting IGBTs (BiMOSFET ™) 3 kV

Part Number	V_{ce}	I_{C25} T_C = 25°C	I_C T_C = 110°C	$V_{CE(sat)}$ typ. max. T_C = 25°C (110°C)	Q_g typ.	t_f (t_{fi}) typ. T_J = 125°C	R_{thJC} IGBT	Package
	V	A	A	V	ns	mJ	K/W	
IXBH10N300	3000	30	10	2.8	45	1030	0.69	TO-247AD
IXBA10N300HV		34	10	2.2	46	2010	0.69	TO-263ABHV
IXBH10N300HV		34	10	2.2	46	2010	0.69	TO-247HV
IXBF22N300		38	22	2.2	110	1650	0.83	ISOPLUS i4-PAC™
IXBA14N300HV		38	14	2.2	62	1730	0.62	TO-263ABHV
IXBH14N300HV		38	14	2.2	62	1730	0.62	TO-247HV
IXBF32N300		40	22	2.8	142	630	0.78	ISOPLUS i4-PAC™
IXBF42N300		60	24	2.5	200	490	0.52	ISOPLUS i4-PAC™
IXBT22N300HV		60	22	2.2	110	1650	0.43	TO-268AAHV
IXBH22N300HV		60	22	2.2	110	1650	0.43	TO-247HV
IXBX28N300HV		62	28	2.3	110	3280	0.36	PLUS247HV
IXBH32N300		80	32	2.8	142	630	0.31	TO-247AD
IXBH32N300HV		80	32	2.8	142	630	0.31	TO-247HV
IXBT32N300HV		80	32	2.8	142	630	0.31	TO-268AAHV
IXBF55N300		86	34	2.7	335	260	0.35	ISOPLUS i4-PAC™
IXBH42N300HV		104	42	2.5	200	490	0.25	TO-247HV
IXBT42N300HV		104	42	2.5	200	490	0.25	TO-268AAHV
IXBK55N300		130	55	2.7	335	260	0.2	TO-264
IXBX55N300		130	55	2.7	335	260	0.2	PLUS247

X112
E2-Pack

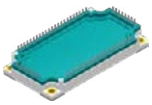

X113/X113a
E3-Pack/PFP

Six-Pack IGBT Modules in E2 Housings

Part Number	V_{CES}	I_{C25} IGBT T_C = 25 °C	I_{C80} IGBT T_C = 80 °C	$V_{CE(sat)}$ typ. IGBT T_J = 25 °C	E_{off} IGBT T_J = 125 °C	R_{thJC} IGBT	I_{F25} Diode T_C = 25 °C	I_{F80} Diode T_C = 80 °C	NTC	Layout	Package
	V	A	A	V	mJ	K/W	A	A			
1200 V XPT™ IGBT											
MIXA30W1200TED [1]	1200	43	30	1.8	3	0.84	44	29	•	B	E2-Pack
MIXA40W1200TED [1]		60	40	1.8	4.1	0.64	44	29	•	B	
MIXA41W1200ED [1]		60	40	1.8	4.1	0.64	44	29	-	A	
MIXA60W1200TED [1]		85	60	1.8	5.5	0.43	88	59	•	B	
MIXA80W1200TED [1]		120	84	1.8	8.3	0.32	135	90	•	B	
MIXA80W1200PTED [1,2]		120	84	1.8	8.3	0.32	135	90	•	B	E3-Pack/PFP

1 Options: PressFit-Pin version and phase change material; please contact IXYS sales office for availability
2 PressFit-Pins version

Six-Pack IGBT Modules in E3 Housings

Part Number	V_{CES}	I_{C25} IGBT T_C = 25 °C	I_{C80} IGBT T_C = 80 °C	$V_{CE(sat)}$ typ. IGBT T_J = 25 °C	E_{off} IGBT T_J = 125 °C	R_{thJC} IGBT	I_{F25} Diode T_C = 25 °C	I_{F80} Diode T_C = 80 °C	NTC	Layout	Package
	V	A	A	V	mJ	K/W	A	A			
1200 V XPT™ IGBT											
MIXA80W1200TEH [1]	1200	120	84	1.8	8.3	0.32	135	90	•	C	E2-Pack
MIXA100W1200TEH [1]		155	108	1.8	11	0.25	135	90	•	C	
MIXA150W1200TEH [1]		220	150	1.8	16	0.18	190	130	•	C	
1200 V X2PT™ IGBT											
MIXG120W1200TEH [1]	1200	185	140	1.7	8.2 (150°C)	0.3	180	135	•	C	E2-Pack
MIXG180W1200TEH [1]		260	195	1.7	14.7 (150°C)	0.18	230	170	•	C	
MIXG180W1200PTEH [2]		260	195	1.7	14.7 (150°C)	0.18	230	170	•	C	E3-Pack/PFP
MIXG240W1200TEH [1]		312	233	1.7	20.5 (150°C)	0.16	200	144	•	C	E2-Pack
1200 V X2PT™ IGBT and Shunt Resistor											
MIXG240W1200PZTEH [2]	1200	312	233	1.7	20.5 (150°C)	0.16	189	136	•	D	E3-Pack/PFP
MIXG240W1200PZTEH-PC [2,3]		312	233	1.7	20.5 (150°C)	0.16	189	136	•	D	

1 Options: PressFit-Pin version and phase change material; please contact IXYS sales office for availability **2** PressFit-Pins version **3** Phase-change material (PCM)

Layout A

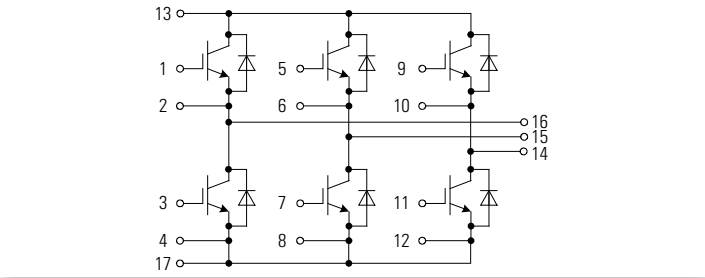

Layout B

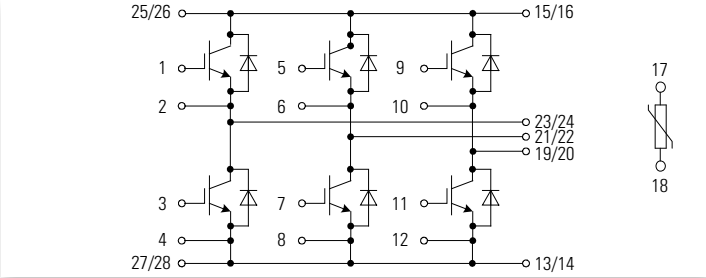

Layout C

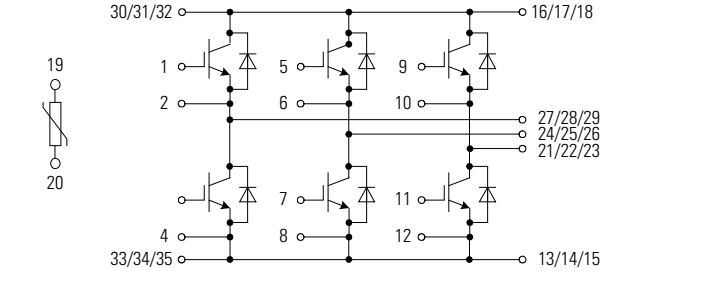

Layout D

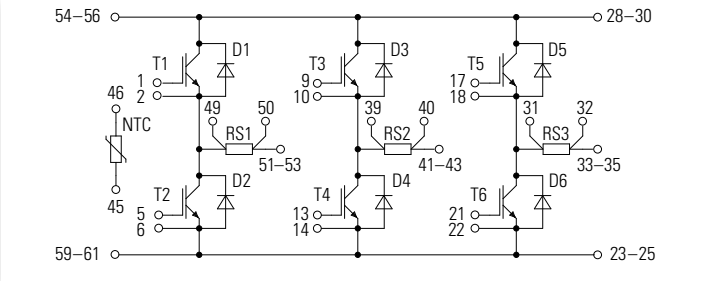

©2023 Littelfuse, Inc

CBI IGBT Modules in E3-Pack

Part Number	Rectifier 3 Phase			Inverter 3 Phase					Brake chopper			Layout	Package
	V_{RRM}	I_{DAVM} $T_C = 80$ °C	R_{thJC} typ.	V_{CES}	I_C $T_C = 25$ °C	I_C $T_C = 80$ °C	$V_{CE(sat)}$ typ.	R_{thJC} typ.	V_{CES}	I_C $T_C = 80$°C	R_{thJC} typ.		
	V	A	K/W	V	A	A	V	K/W	V	A	K/W		
1200 V XPT™ IGBT													
MIXA60WB1200TEH	1600	190	0.65	1200	85	60	1.8	0.43	1200	40	0.64	E	E3-Pack
MIXA60WH1200TEH[1]		135	0.65		85	60	1.8	0.43		40	0.64	G	E3-Pack
MIXA80WB1200TEH		265	0.5		120	84	1.8	0.32		40	0.64	E	E3-Pack
MIXA81WB1200TEH		290	0.45		120	84	1.8	0.32		60	0.43	F	E3-Pack
1700 V Trench IGBT													
MUBW50-17T8	2200	130	1.1	1700	74	53	2	0.49	1700	34	0.62	E	E3-Pack
MUBW50-17T8-PFPC[2]		130	1.1		74	53	2	0.49		34	0.62	E	E3-Pack/PFP
MUBW75-17T8		155	0.95		113	80	2	0.28		34	0.62	E	E3-Pack
MUBW75-17T8-PFPC[2]		155	0.95		113	80	2	0.28		34	0.62	E	E3-Pack/PFP

1 Input rectifier half-controlled; **2** with PressFit-Pins and pre-applied phase change material;
Options: PressFit-Pins version and phase change material; please contact the IXYS sales office for availability.

CBI IGBT Modules in E2-Pack

Part Number	Rectifier 3 Phase			Inverter 3 Phase					Brake Chopper			Layout	Package
	V_{RRM}	I_{DAVM} $T_C = 80$°C	R_{thJC} typ.	V_{CES}	I_C $T_C = 25$ °C	I_C $T_C = 80$ °C	$V_{CE(sat)}$ typ.	R_{thJC} typ.	V_{CES}	I_C $T_C = 80$°C	R_{thJC} typ.		
	V	A	K/W	V	A	A	V	K/W	V	A	K/W		
1200 V XPT™ IGBT													
MIXA10WB1200TED	1600	105	1.1	1200	17	12	1.8	2	1200	12	2	E	E2-Pack
MIXA20WB1200TED		105	1.1		28	20	1.8	1.26		12	2		
MIXA30WB1200TED		105	1.1		43	30	1.8	0.84		12	2		
MIXA40WB1200TED		105	1.1		50	40	1.8	0.64		20	1.26		

Layout E

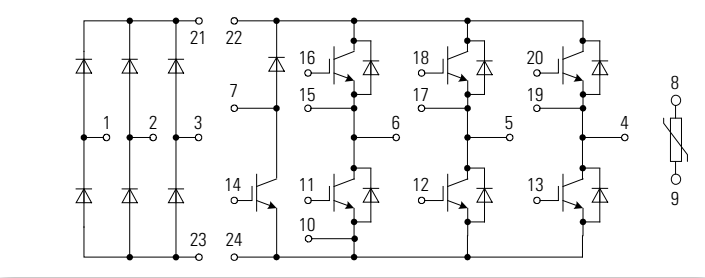

Layout F

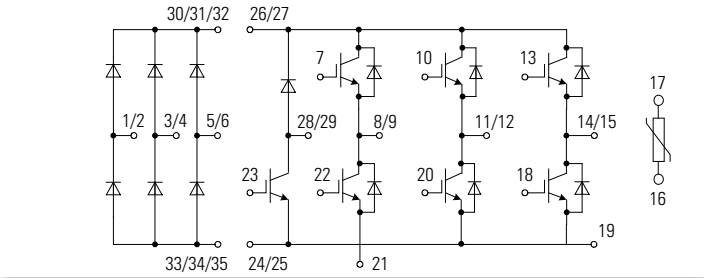

Layout G

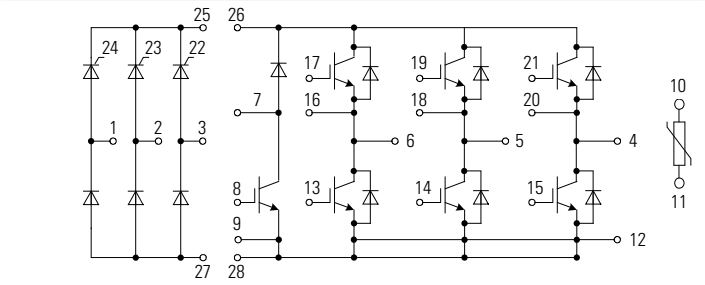

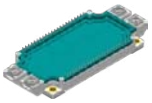

X143
Simbus F

X112
E2-Pack

X112a
E2-Pack PFP

X103
V1-A-Pack

IGBT XPT™ Modules in SimBus F Package

- Saves space
- Reduced protection circuits
- Package is designed for wave soldering
- PressFit-Pins version is available

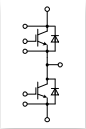

...PF...
phase - leg

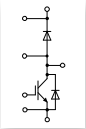

...RF...
brake boost

Part Number	V_{CES}	I_{C80} IGBT T_C = 80 °C	$V_{CE(sat)}$ typ. IGBT T_J = 25 °C	E_{on} IGBT T_J = 125 °C	E_{off} IGBT T_J = 125 °C	R_{thJC} IGBT	I_{F80} Diode T_C = 80°C	R_{thJC} Diode	Package
	V	A	V	mJ	mJ	K/W	A	K/W	
XPT™ / X2PT™ IGBT Phase Leg									
MIXA225PF1200TSF	1200	250	1.8	20	27	0.115	185	0.145	Simbus F
MIXA300PF1200TSF		325	1.8	20	42	0.085	185	0.145	
MIXA450PF1200TSF		450	1.8	22	68	0.06	265	0.095	

Options: PressFit-Pins version and phase-change material; please contact the IXYS sales office for availability

Brake Buck Boost Chopper IGBT Modules

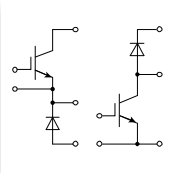

MIXA...HU...

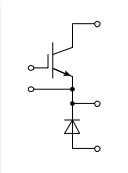

MIXA...O...

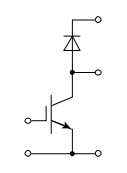

MIXA...R...

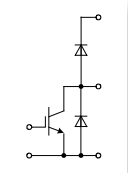

...RF...

Part Number	V_{CES}	I_{C25} IGBT T_C = 25 °C	I_{C80} IGBT T_C = 80 °C	$V_{CE(sat)}$ typ. IGBT T_J = 25 °C	E_{off} IGBT T_J = 125 °C	R_{thJC} IGBT	I_{F25} Diode T_C = 25 °C	I_{F80} Diode T_C = 80 °C	Package
	V	A	A	V	mJ	K/W	A	A	
X2PT™ IGBT Brake									
MIXG240RF1200TED [1]	1200	335	250	1.7	23 (150°C)	0.12	265	195	E2-Pack
MIXG240RF1200PTED [2]		335	250	1.7	23 (150°C)	0.12	265	195	E2-Pack PFP
MIXG240RF1200PTED-PC [2, 3]		335	250	1.7	23 (150°C)	0.12	265	195	
MIXG360RF1200TED [1]		532	400	1.7	30 (150°C)	0.08	390	285	E2-Pack
MIXG360RF1200PTED-PC [2, 3]		532	400	1.7	30 (150°C)	0.08	390	285	E2-Pack PFP
Trench IGBT Brake									
MITA300RF1700PTED [2]	1700	450	310	1.7	34	0.09	390	285	E2-Pack PFP
MITA300RF1700PTED-PC [2, 3]		450	310	1.7	34	0.09	390	285	
XPT™ IGBT Brake Boost Chopper									
MIXA80R1200VA	1200	120	84	1.9	8,3	0.32	135	90	V1-A-Pack
MIXA150R1200VA		220	150	1.8	16	0.18	190	130	
XPT™ IGBT Buck Chopper									
MIXA150Q1200VA	1200	220	150	1.8	16	0.18	190	130	V1-A-Pack
XPT™ IGBT Buck Boost Switched Reluctance Chopper									
MIXA60HU1200VA	1200	85	60	1.8	5.5	0.43	88	59	V1-A-Pack

1 Options: PressFit-Pins version and/or phase-change material; please contact the IXYS sales office for availability
2 PressFit-Pins version
3 Phase-change material (PCM)

©2023 Littelfuse, Inc

Power MOSFET

The metal oxide semiconductor field effect transistor (MOSFET) is used for high-frequency switching control of power electronic systems. IXYS offers various MOSFET technologies based on the customer requirement for voltage, and switching frequency. Here is a graphical representation of our basic MOSFET offerings:

$R_{DS(on)}$ and Blocking Voltage Ranges per MOSFET Technology

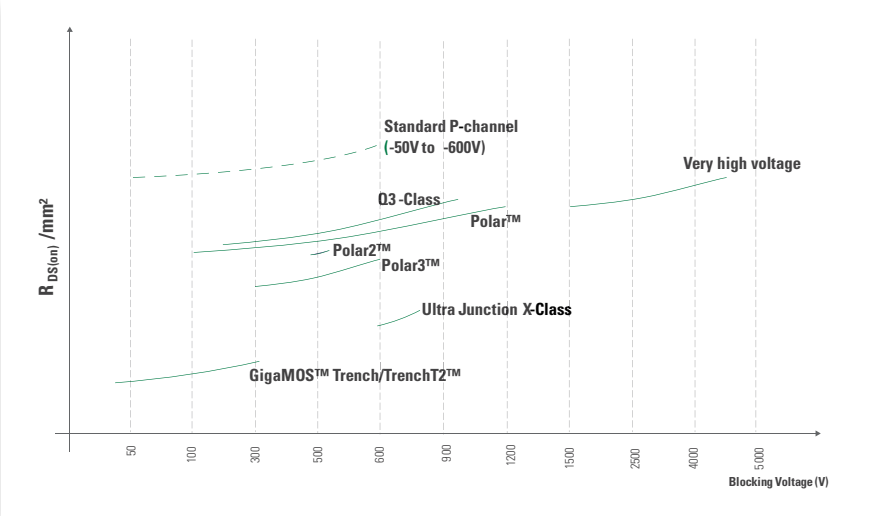

Trench and TrenchT2TM Power MOSFET

IXYS Trench Power MOSFETs are ideally suited for low-voltage, high-current applications. These MOSFETs feature an exceptionally low RDS(on), thus guaranteeing low power dissipation. Trench HiPerFET™ versions feature all of the advantages presented by IXYS's Trench Standard Power MOSFET with the added benefit of a fast intrinsic rectifier that provides low reverse recovery charge (Qrr) and excellent commutating dV/dt ratings for enhanced power switching capabilities and device ruggedness.

Polar™ Power MOSFET

Polar™ MOSFETs (IXT..) feature a proprietary cell design and process that has resulted in a MOSFET with a 30% reduction in $R_{DS(on)}$ per unit area along with a decrease in gate charge. IXYS also reduces the wafer thickness, which substantially reduces the thermal resistance. The combination of lower $R_{DS(on)}$, lower gate charge Q_g, and higher power dissipation capability has resulted in a new class of MOSFET that will increase the cost effectiveness in switch mode power supply (SMPS) applications.

IXYS's Polar™ HiPerFETs™ (IXF..) combine the strengths of the Polar Standard product family with a faster body diode, whose reverse recovery time (t_{rr}) is reduced, making them suitable for phase-shift bridges, motor control, and uninterruptible power supply applications (UPS). This family of HiPerFETsTM provides the lowest $R_{DS(on)}$, low R_{thJC}, low Q_g, and enhanced DV/DT capability.

PolarP2™ Power MOSFET

PolarP2™ devices represent an optimized range of the standard Polar platform for 500V device ratings.

PolarP3™ HiPerFET™ Power MOSFET

The PolarP3™ HiPerFET™ product family is the latest addition to IXYS's benchmark high-performance Polar-Series product line for our product portfolio between 500 V and 600 V. Its high figure of merit (FOM), the multiplication of Q_g and in $R_{DS(on)}$, provides an excellent alternative to weaker super junction technologies. All IXYS Polar MOSFET are 100% tested for avalanche energy, proving that it is the industry standard for reliability and ruggedness.

Ultrajunction Technology Power MOSFET

These devices are developed charge compensation principles and proprietary process technology, resulting in Power MOSFET having significantly reduced resistance $R_{DS(on)}$ and gate charge Q_g. They also exhibit superior dv/dt capability and avalanche performance. The Ultrajunction family of power MOSFETs is available in four generations of technology, namely X, X2, X3 and X4, depending on voltage class. They are designed for applications such as switched mode and resonant mode power supplies, DC-DC converters, PFC circuits, AC and DC motor drives, and robotic and servo control. These MOSFETs enable higher efficiency, along with high power density and cooler system performance. The X-, X2-, and X3-Class Power MOSFETs are also available with fast body diodes (HiPerFETTM).

Q3-Class HiPerFET™ MOSFET

Q3-Class HiPerFET™ MOSFETs (identified by the suffix letter Q3) are the direct result of a revolutionary new chip design that decreases the MOSFET total gate charge (Q_g) and the Miller capacitance (C_{rss}) while maintaining the ruggedness and fast-switching intrinsic diode of the company's current HiPerFET™ product line. The result is a MOSFET with dramatically improved switching efficiencies, thus enabling higher frequency operation and smaller power supplies.

Extended FBSOA Linear Power MOSFET

IXYS's Extended FBSOA Linear Power MOSFETs are a class of rugged Power MOSFETs tailored specifically for applications that require Power MOSFETs to operate in their current saturation region. These new devices feature low static drain to source on-resistances and provide unparalleled performance and reliability in controlled current output applications. Typical applications that stand to benefit from this new class of extended FBSOA power MOSFETs include circuit breakers, current sources, programmable loads, power controllers, power regulators, motor control, power amplifiers, and soft start applications. In the linear mode, power MOSFETs are subjected to high thermo-electrical stress caused by the simultaneous occurrence of high drain voltage and current, resulting in high power dissipation. IXYS has optimized the internal structure of these MOSFETs, achieving an extended forward bias safe operating area (FBSOA) capability to overcome the limitations posed by conventional power MOSFETs operating in current saturation regions. These extended FBSOA Power MOSFETs are not intended for high-speed switching applications.

Depletion-Mode MOSFET

Depletion-Mode Power MOSFETs operate in a "normally-on" mode that does not require energy or gate voltage to turn on. Unlike the regular enhancement type MOSFETs, these Depletion-Mode MOSFETs require a negative gate bias to turn off. Consequently, they remain at or above zero gate bias voltage; otherwise, however, they have similar MOSFET characteristics. The "normally-on" operational mode of these devices, combined with an enhanced linear operating capability, allows for ideal device selection in terms of current sources, current regulators, solid-state relays, level shifting, active loads, start-up circuits, and active power filters. Since these devices require no energy or gate voltage to turn on, high energy efficiency can be achieved through device implementation in zero power, "normally on" load switch applications. Given the high degree of current regulation, these devices can also act as active inductors with high dynamic impedance in power filter applications to limit the voltage, current noise, and spikes. Furthermore, these devices can provide active circuit protection to limit the surge of current during short circuits or overload conditions.

PolarP™ P-Channel Power MOSFET

IXYS's Polar technology platform, employed in our PolarP™ P-Channel MOSFETs, uses a proprietary cell design that improves overall device efficiency and performance. This technology platform reduces on-state resistance by as much as 30% and gate charge by 40% compared to legacy counterparts. With such low on-state resistances, these devices offer low conduction and switching losses and low input capacitance. The combination of low $R_{DS(on)}$ and gate charge allows for improved energy efficiency. These P-Channel MOSFETs are dynamic dV/dt and avalanche-rated, making them extremely rugged in demanding operating environments and can easily be paralleled due to an on-state resistance with a positive temperature coefficient. These are ideal for "high-side" switching in which a simple drive circuit referenced to ground can be used, circumventing additional "high-side" driver circuitry commonly involved in the use of N-Channel MOSFETs. This will help designers reduce component count and improve reliability. Furthermore, it allows for the design of a complementary power output stage with a corresponding IXYS N-Channel MOSFET for a power half-bridge stage with a simple drive circuit.

TrenchP™ P-Channel Power MOSFET

This family of P-Channel devices benefits from technological advances derived from IXYS' robust trench cell design commonly implemented in their wide portfolio of industry-recognized power devices. They feature an ultra low $R_{DS(on)}$, minimizing conduction losses and promoting improved operating and thermal efficiencies. These TrenchP™ P-Channel MOSFETs are suitable for "high-side" switching in which a simple drive circuit referenced to ground can be employed, circumventing additional "high-side" driver circuitry commonly involved in the use of an N-Channel MOSFET. This enables designers to reduce component count, thereby improving drive circuit simplicity and cost structure. Furthermore it allows for the design of a complementary power output stage with a corresponding IXYS N-Channel MOSFET for a power half-bridge stage with a simple drive circuit. Common applications that will greatly benefit from these devices include high side Switching, high current regulators, DC Choppers, CMOS high power amplifiers, push-pull amplifiers and power solid state relays.

Very High Voltage Power MOSFET

IXYS' VHV N-Channel Power MOSFETs are specifically designed to address demanding, fast-switching applications requiring blocking capabilities of 2.5kV to 4.5kV. These VHV Power MOSFETs are also ideally suited for parallel operation due to the positive temperature coefficient of their on-state resistance. Parallel operation with these devices provides a more cost-effective solution than employing series-connected, lower-voltage MOSFET. The reduction or replacement of multiple series-connected devices and the associated gate drive circuitry commonly involved simplifies design, improves reliability, and reduces over-all system costs.

These VHV MOSFETs are an optimal solution in applications such as laser and x-ray generation systems, high-voltage power supplies, pulse circuits, high voltage automated test equipment, and capacitor discharge circuits. 4.5kV device offerings feature high isolation capability with superior thermal performance.

©2023 Littelfuse, Inc

Trench Power MOSFET

X004
TO-252AA

X005a
TO-220AB

X011b
TO-263AB

X014a
TO-247AD

X017a
TO-3P

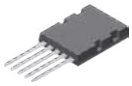

X022c
ISOPLUS264™

X024d
ISOPLUS i4-PAC™

X027a
SOT-227B miniBLOC

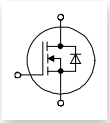

Part Number	V_{DSS}	$I_{D(cont)}$ Chip $T_C = 25$ °C	$R_{DS(on)}$ $T_J = 25$ °C	C_{iss} typ.	Q_g typ.	t_{rr} typ.	R_{thJC}	P_D	Package
	V	A	Ω	pF	nC	ns	K/W	W	
IXTP44N10T	100	44	0.03	1567	27.4	60	1.15	130	TO-220AB
IXTY44N10T		44	0.03	1567	27.4	60	1.15	130	TO-252AA
IXTP60N10T		60	0.018	2650	49	59	0.85	176	TO-220AB
IXTA60N10T		60	0.018	2650	49	59	0.85	176	TO-263AB
IXTQ60N10T		60	0.018	2650	49	59	0.85	176	TO-3P
IXTP80N10T		80	0.014	3040	60	100	0.65	230	TO-220AB
IXTF200N10T		90	0.007	9400	152	76	0.96	156	ISOPLUS i4-PAC™
IXTP130N10T		130	0.0091	5080	104	67	0.42	360	TO-220AB
IXTH130N10T		130	0.0091	5080	104	67	0.42	360	TO-247AD
IXTA130N10T		130	0.0091	5080	104	67	0.42	360	TO-263AB
IXTQ130N10T		130	0.0091	5080	104	67	0.42	360	TO-3P
IXTP180N10T		180	0.0064	6900	151	72	0.31	480	TO-220AB
IXTH180N10T		180	0.0064	6900	151	100	0.31	480	TO-247AD
IXTA180N10T		180	0.0064	6900	151	72	0.31	480	TO-263AB
IXTQ180N10T		180	0.0064	6900	151	100	0.31	480	TO-3P
IXTN200N10T		200	0.0055	9400	152	76	0.3	550	SOT-227B miniBLOC
IXTH200N10T		200	0.0055	9400	152	76	0.27	550	TO-247AD
IXTQ200N10T		200	0.0055	9400	152	76	0.27	550	TO-3P
IXTP48N20T	200	48	0.05	3090	60	130	0.5	250	TO-220AB
IXTA48N20T		48	0.05	3090	60	130	0.5	250	TO-263AB
IXTQ48N20T		48	0.05	3090	60	130	0.5	250	TO-3P
IXTP60N20T		60	0.04	4530	73	118	0.3	500	TO-220AB
IXTA60N20T		60	0.04	4530	73	118	0.3	500	TO-263AB
IXTQ60N20T		60	0.04	4530	73	118	0.3	500	TO-3P
IXTP86N20T		86	0.029	4500	90	140	0.31	480	TO-220AB
IXTA86N20T		86	0.029	4500	90	140	0.31	480	TO-263AB
IXTQ86N20T		86	0.029	4500	90	140	0.31	480	TO-3P
IXTH130N20T		130	0.016	8800	150	150	0.18	830	TO-247AD
IXTP50N25T	250	50	0.06	4000	78	166	0.31	400	TO-220AB
IXTH50N25T		50	0.06	4000	78	166	0.31	400	TO-247AD
IXTA50N25T		50	0.06	4000	78	166	0.31	400	TO-263AB
IXTQ50N25T		50	0.06	4000	78	166	0.31	400	TO-3P
IXTP76N25T		76	0.039	4920	92	148	0.27	460	TO-220AB
IXTH76N25T		76	0.039	4920	92	148	0.27	460	TO-247AD
IXTA76N25T		76	0.039	4920	92	148	0.27	460	TO-263AB
IXTQ76N25T		76	0.039	4920	92	148	0.27	460	TO-3P
IXTH86N25T		86	0.037	5330	105	156	0.23	540	TO-247AD
IXTQ86N25T		86	0.037	5330	105	156	0.23	540	TO-3P
IXTH96N25T		96	0.029	6100	114	158	0.2	625	TO-247AD
IXTQ96N25T		96	0.029	6100	114	158	0.2	625	TO-3P
IXTH110N25T		110	0.024	9400	157	170	0.18	694	TO-247AD

D5
DE 475

X011b
TO-263AB

X016a
ISOPLUS247™

X027a
SOT-227B miniBLOC

X004
TO-252AA

X014a
TO-247AD

X019
TO-268AA

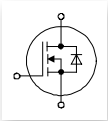

X005a
TO-220AB

X015a
PLUS247

X020a
TO-264

Trench HiPerFET ™ MOSFET with Fast Intrinsic Diode

Part Number	V_{DSS}	$I_{D(cont)}$ Chip $T_C = 25°C$	$R_{DS(on)}$ $T_J = 25°C$	C_{iss} typ.	Q_g typ.	t_{rr} max (typ.)	R_{thJC}	P_D	Package
	V	A	Ω	pF	nC	ns	K/W	W	
IXFA130N10T	100	130	0.0091	5080	104	67	0.42	360	TO-263AB
IXFP130N10T		130	0.0091	5080	104	67	0.42	360	TO-220AB
IXFH230N10T		230	0.0047	15300	250	-82	0.23	650	TO-247AD
IXFX360N10T		360	0.0029	33000	525	130	0.12	1250	PLUS247
IXFN360N10T		360	0.0026	33000	525	130	0.18	830	SOT-227B miniBLOC
IXFK360N10T		360	0.0029	33000	525	130	0.12	1250	TO-264
IXFX420N10T		420	0.0026	47000	670	140	0.09	1670	PLUS247
IXFN420N10T		420	0.0023	47000	670	140	0.14	1070	SOT-227B miniBLOC
IXFK420N10T		420	0.0026	47000	670	140	0.09	1670	TO-264
IXFA102N15T	150	102	0.018	5220	87	120	0.33	455	TO-263AB
IXFH102N15T		102	0.018	5220	87	120	0.33	455	TO-247AD
IXFP102N15T		102	0.018	5220	87	120	0.33	455	TO-220AB
IXFH160N15T		160	0.0096	8800	160	90	0.18	830	TO-247AD
IXFH150N20T	200	150	0.015	11700	177	-100	0.14	890	TO-247AD
IXFT150N20T		150	0.015	11700	177	-100	0.14	890	TO-268AA
IXFR230N20T		156	0.008	28000	378	200	0.25	600	ISOPLUS247™
IXFX170N20T		170	0.011	19600	265	200	0.13	1150	PLUS247
IXFK170N20T		170	0.011	19600	265	200	0.13	1150	TO-264
IXFN230N20T		220	0.0075	28000	378	200	0.138	1090	SOT-227B miniBLOC
IXFX230N20T		230	0.0075	28000	378	200	0.09	1670	PLUS247
IXFK230N20T		230	0.0075	28000	378	200	0.9	1670	TO-264
IXFZ140N25T	250	100	0.017	19000	255	200	0.28	445	DE 475
IXFH110N25T		110	0.024	9400	157	170	0.18	694	TO-247AD
IXFH120N25T		120	0.023	11300	180	-108	0.14	890	TO-247AD
IXFT120N25T		120	0.023	11300	180	-108	0.14	890	TO-268AA
IXFN140N25T		120	0.017	19000	255	200	0.18	690	SOT-227B miniBLOC
IXFX140N25T		140	0.017	19000	255	200	0.13	960	PLUS247
IXFK140N25T		140	0.017	19000	255	200	0.13	960	TO-264
IXFN180N25T		168	0.0129	23800	364	200	0.138	900	SOT-227B miniBLOC
IXFX180N25T		180	0.0129	23800	364	200	0.09	1390	PLUS247
IXFK180N25T		180	0.0129	23800	364	200	0.09	1390	TO-264
IXFH46N30T	300	46	0.08	4770	86	150	0.27	460	TO-247AD
IXFT46N30T		46	0.08	4770	86	150	0.27	460	TO-268AA
IXFH86N30T		86	0.043	11300	180	150	0.15	830	TO-247AD
IXFT86N30T		86	0.043	11300	180	150	0.15	830	TO-268AA
IXFH94N30T		94	0.036	11400	190	-155	0.14	890	TO-247AD
IXFT94N30T		94	0.036	11400	190	-155	0.14	890	TO-268AA
IXFX120N30T		120	0.024	20000	265	200	0.13	960	PLUS247
IXFK120N30T		120	0.024	20000	265	200	0.13	960	TO-264
IXFN160N30T		130	0.019	28000	335	200	0.138	900	SOT-227B miniBLOC
IXFX160N30T		160	0.019	28000	335	200	0.09	1390	PLUS247
IXFK160N30T		160	0.019	28000	335	200	0.09	1390	TO-264

©2023 Littelfuse, Inc

Trench HiPerFET ™ MOSFET with Fast Intrinsic Diode

Part Number	V_{DSS}	$I_{D(cont)}$ Chip $T_C = 25°C$	$R_{DS(on)}$ $T_J = 25°C$	C_{iss} typ.	Q_g typ.	t_{rr} max (typ.)	R_{thJC}	P_D	Package
	V	A	Ω	pF	nC	ns	K/W	W	
IXTP100N04T2	40	100	0.007	2690	25,5	34	1	150	TO-220AB
IXTA100N04T2		100	0.007	2690	25,5	34	1	150	TO-263AB
IXTP120N04T2		120	0.0061	3240	58	35	0.75	200	TO-220AB
IXTA120N04T2		120	0.0061	3240	58	35	0.75	200	TO-263AB
IXTP160N04T2		160	0.005	4640	79	40	0.6	250	TO-220AB
IXTA160N04T2		160	0.005	4640	79	40	0.6	250	TO-263AB
IXTP220N04T2		220	0.0035	6820	112	45	0.42	360	TO-220AB
IXTA220N04T2		220	0.0035	6820	112	45	0.42	360	TO-263AB
IXTP300N04T2		300	0.0025	10700	145	53	0.31	480	TO-220AB
IXTH300N04T2		300	0.0025	10700	145	53	0.31	480	TO-247AD
IXTA300N04T2		300	0.0025	10700	145	53	0.31	480	TO-263AB
IXTH420N04T2		420	0.002	19700	315	74	0.16	935	TO-247AD
IXTH500N04T2		500	0.0016	25000	405	84	0.15	1000	TO-247AD
IXTT500N04T2		500	0.0016	25000	405	84	0.15	1000	TO-268AA
IXTX600N04T2		600	0.0015	40000	590	100	0.12	1250	PLUS247
IXTN600N04T2		600	0.0011	40000	590	100	0.16	940	SOT-227B miniBLOC
IXTK600N04T2		600	0.0015	40000	590	100	0.12	1250	TO-264
IXTA90N055T2	55	90	0.0084	2770	42	37	1	150	TO-263AB
IXTP90N055T2		90	0.0084	2770	42	37	1	150	TO-220AB
IXTY90N055T2		90	0.0084	2770	42	37	1	150	TO-252AA
IXTP110N055T2		110	0.0066	3060	57	38	0.82	180	TO-220AB
IXTA110N055T2		110	0.0066	3060	57	38	0.82	180	TO-263AB
IXTP140N055T2		140	0.0054	4760	82	40	0.6	250	TO-220AB
IXTA140N055T2		140	0.0054	4760	82	40	0.6	250	TO-263AB
IXTP200N055T2		200	0.0042	6970	109	49	0.42	360	TO-220AB
IXTA200N055T2		200	0.0042	6970	109	49	0.42	360	TO-263AB
IXTP260N055T2		260	0.0033	10800	140	60	0.31	480	TO-220AB
IXTH260N055T2		260	0.0033	10800	140	60	0.31	480	TO-247AD
IXTA260N055T2		260	0.0033	10800	140	60	0.31	480	TO-263AB
IXTH360N055T2		360	0.0024	20000	330	78	0.16	935	TO-247AD
IXTT360N055T2		360	0.0024	20000	330	78	0.16	935	TO-268AA
IXTH440N055T2		440	0.0018	25000	405	76	0.15	1000	TO-247AD
IXTT440N055T2		440	0.0018	25000	405	76	0.15	1000	TO-268AA
IXTX550N055T2		550	0.0016	40000	595	100	0.12	1250	PLUS247
IXTN550N055T2		550	0.0013	40000	595	100	0.16	940	SOT-227B miniBLOC
IXTK550N055T2		550	0.0016	40000	595	100	0.12	1250	TO-264
IXTZ550N055T2		550	0.001	40000	595	100	0.25	600	DE 475
IXTP130N065T2	65	130	0.0066	4800	79	41	0.6	250	TO-220AB
IXTA130N065T2		130	0.0066	4800	79	41	0.6	250	TO-263AB
IXTP70N075T2	75	70	0.012	2580	46	48	1	150	TO-220AB
IXTA70N075T2		70	0.012	2580	46	48	1	150	TO-263AB
IXTP90N075T2		90	0.01	3290	54	50	0.82	180	TO-220AB
IXTA90N075T2		90	0.01	3290	54	50	0.82	180	TO-263AB
IXTP120N075T2		120	0.0077	4740	78	50	0.6	250	TO-220AB
IXTA120N075T2		120	0.0077	4740	78	50	0.6	250	TO-263AB
IXTP170N075T2		170	0.0054	6860	109	63	0.42	360	TO-220AB
IXTA170N075T2		170	0.0054	6860	109	63	0.42	360	TO-263AB
IXTP230N075T2		230	0.0042	10.5	178	66	0.31	480	TO-220AB
IXTA230N075T2		230	0.0042	10.5	178	66	0.31	480	TO-263AB
IXTP80N12T2	120	80	0.017	4740	80	90	0.46	325	TO-220AB
IXTA80N12T2		80	0.017	4740	80	90	0.46	325	TO-263AB

D5
DE 475

X005a
TO-220AB

X007a
TO-220ABFP

X011b
TO-263AB

X014a
TO-247AD

X015a
TO-247AD

X019
TO-268AA

X020a
TO-264

X027a
SOT-227B miniBLOC

X031a
SMPD-X

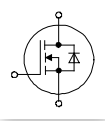

TrenchT2™ MOSFET in SMPD Package

Part Number	V_{DSS}	$I_{D(cont)}$ Chip T_C = 25 °C	$R_{DS(on)}$ T_J = 25 °C	C_{iss} typ.	Q_g typ.	t_{rr} typ.	R_{thJC}	P_D	Package
	V	A	Ω	pF	nC	ns	K/W	W	
MMIX1T600N04T2	40	600	0.0013	40000	590	100	0.18	830	SMPD-X
MMIX1T550N055T2	55	550	0.0013	40000	595	100	0.18	830	SMPD-X
MMIX1F520N075T2	75	500	0.0016	41000	545	150	0.18	830	SMPD-X

TrenchT2™ HiPerFET™ Power MOSFET

Part Number	V_{DSS}	$I_{D(cont)}$ Chip T_C = 25 °C	$R_{DS(on)}$ T_J = 25 °C	C_{iss} typ.	Q_g typ.	t_{rr} typ.	R_{thJC}	P_D	Package
	V	A	Ω	pF	nC	ns	K/W	W	
IXFP230N075T2	75	230	0.0042	10500	178	59	0.31	480	TO-220AB
IXFH230N075T2		230	0.0042	10500	178	59	0.31	480	TO-247AD
IXFA230N075T2		230	0.0042	10500	178	59	0.31	480	TO-263AB
IXFH340N075T2		340	0.0032	19000	300	75	0.16	935	TO-247AD
IXFT340N075T2		340	0.0032	19000	300	75	0.16	935	TO-268AA
IXFH400N075T2		400	0.0023	24000	420	77	0.15	1000	TO-247AD
IXFT400N075T2		400	0.0023	24000	420	77	0.15	1000	TO-268AA
IXFZ520N075T2		420	0.0016	41000	545	n/a	0.25	600	DE 475
IXFN520N075T2		480	0.0019	41000	545	n/a	0.16	940	SOT-227B miniBLOC
IXFX520N075T2		520	0.0022	41000	545	n/a	0.12	1250	PLUS247
IXFK520N075T2		520	0.0022	41000	545	n/a	0.12	1250	TO-264
IXFP130N10T2	100	130	0.0091	6600	130	n/a	0.42	360	TO-220AB
IXFA130N10T2		130	0.0091	6600	130	n/a	0.42	360	TO-263AB
IXFP180N10T2		180	0.006	10500	185	66	0.31	480	TO-220AB
IXFA180N10T2		180	0.006	10500	185	66	0.31	480	TO-263AB
IXFH320N10T2		320	0.0035	25000	430	98	0.15	1000	TO-247AD
IXFT320N10T2		320	0.0035	26000	430	98	0.15	1000	TO-268AA

©2023 Littelfuse, Inc

TrenchT2™ HiPerFET™ Power MOSFET

Part Number	V_{DSS}	$I_{D(cont)}$ Chip T_C = 25 °C	$R_{DS(on)}$ T_J = 25 °C	C_{iss} typ.	Q_g typ.	t_{rr} typ.	R_{thJC}	P_D	Package
	V	A	Ω	pF	nC	ns	K/W	W	
IXFP76N15T2	150	76	0.02	5800	97	69	0.43	350	TO-220FPAB
IXFA76N15T2		76	0.02	5800	97	69	0.43	350	TO-263AB
IXFP110N15T2		110	0.013	8600	150	85	0.31	480	TO-220AB
IXFH110N15T2		110	0.013	8600	150	85	0.31	480	TO-247AD
IXFA110N15T2		110	0.013	8600	150	85	0.31	480	TO-263AB
IXFH160N15T2		160	0.009	15000	253	n/a	0.17	880	TO-247AD
IXFX240N15T2		240	0.0052	32000	460	n/a	0.12	1250	PLUS247
IXFN240N15T2		240	0.0052	32000	460	n/a	0.18	830	SOT-227B miniBLOC
IXFK240N15T2		240	0.0052	32000	460	n/a	0.12	1250	TO-264
IXFN360N15T2		310	0.004	47500	715	n/a	0.14	1070	SOT-227B miniBLOC
IXFX360N15T2		360	0.004	47500	715	n/a	0.09	1670	PLUS247
IXFK360N15T2		360	0.004	47500	715	n/a	0.09	1670	TO-264
IXFX220N17T2	170	220	0.0063	31000	500	n/a	0.12	1250	PLUS247
IXFK220N17T2		220	0.0063	31000	500	n/a	0.12	1250	TO-264
IXFN320N17T2		260	0.0052	45000	640	n/a	0.14	1070	SOT-227B miniBLOC
IXFX320N17T2		320	0.0052	45000	640	n/a	0.09	1670	PLUS247
IXFK320N17T2		320	0.0052	45000	640	n/a	0.09	1670	TO-264
IXFH150N17T2	175	150	0.012	14600	233	n/a	0.17	880	TO-247AD
IXFT150N17T2		150	0.012	14600	233	n/a	0.17	880	TO-268AA

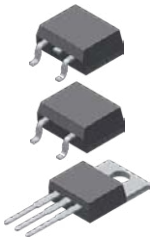

X004
To-252AA

X004a
TO-252AA

X005a
TO-220AB

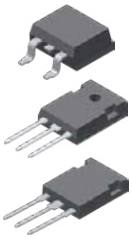

X011b
TO-263AB

X014a
TO-247AD

X016a
ISOPLUS247™

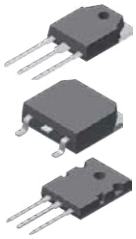

X017a
TO-3P

X019
TO-268AA

X020a
TO-264

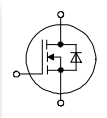

Polar™ Standard MOSFET

Part Number	V_{DSS}	$I_{D(cont)}$ Chip T_C = 25 °C	$R_{DS(on)}$ T_J = 25 °C	C_{iss} typ.	Q_g typ.	t_{rr} typ.	R_{thJC}	P_D	Package
	V	A	Ω	pF	nC	ns	K/W	W	
IXTP75N10P	100	75	0.025	2250	74	120	0.42	360	TO-220AB
IXTA75N10P		75	0.025	2250	74	120	0.42	360	TO-263AB
IXTQ75N10P		75	0.025	2250	74	120	0.42	360	TO-3P
IXTT110N10P		110	0.015	3550	110	130	0.31	480	TO-268AA
IXTQ110N10P		110	0.015	3550	110	130	0.31	480	TO-3P
IXTR200N10P		120	0.008	7600	235	100	0.5	300	ISOPLUS247™
IXTT140N10P		140	0.011	4700	155	120	0.25	600	TO-268AA
IXTQ140N10P		140	0.011	4700	155	120	0.25	600	TO-3P
IXTK170N10P		170	0.009	6000	198	120	0.21	715	TO-264
IXTT170N10P		170	0.009	6000	198	120	0.21	715	TO-268AA
IXTQ170N10P		170	0.009	6000	198	120	0.21	715	TO-3P
IXTK200N10P		200	0.0075	7600	240	100	0.18	800	TO-264
IXTP62N15P	150	62	0.04	2250	70	150	0.42	350	TO-220AB
IXTA62N15P		62	0.04	2250	70	150	0.42	350	TO-263AB
IXTQ62N15P		62	0.04	2250	70	150	0.42	350	TO-3P
IXTT96N15P		96	0.024	3500	110	150	0.31	480	TO-268AA
IXTQ96N15P		96	0.024	3500	110	150	0.31	480	TO-3P
IXTT120N15P		120	0.016	4900	150	150	0.25	600	TO-268AA
IXTQ120N15P		120	0.016	4900	150	150	0.25	600	TO-3P
IXTK150N15P		150	0.013	5800	190	150	0.21	714	TO-264
IXTQ150N15P		150	0.013	5800	190	150	0.21	714	TO-3P
IXTK180N15P		180	0.01	7000	240	150	0.18	800	TO-264
IXTP50N20P	200	50	0.06	2720	70	150	0.42	360	TO-220AB
IXTA50N20P		50	0.06	2720	70	150	0.42	360	TO-263AB
IXTQ50N20P		50	0.06	2720	70	150	0.42	360	TO-3P
IXTT74N20P		74	0.034	3300	107	160	0.31	480	TO-268AA
IXTQ74N20P		74	0.034	3300	107	160	0.31	480	TO-3P
IXTH96N20P		96	0.024	4800	145	160	0.25	600	TO-247AD
IXTT96N20P		96	0.024	4800	145	160	0.25	600	TO-268AA
IXTQ96N20P		96	0.024	4800	145	160	0.25	600	TO-3P
IXTK120N20P		120	0.022	6000	152	180	0.21	714	TO-264
IXTQ120N20P		120	0.022	6000	152	180	0.21	714	TO-3P
IXTK140N20P		140	0.018	7500	240	180	0.18	800	TO-264
IXTP42N25P	250	42	0.084	2300	70	200	0.42	300	TO-220AB
IXTA42N25P		42	0.084	2300	70	200	0.42	300	TO-263AB
IXTQ42N25P		42	0.084	2300	70	200	0.42	300	TO-3P
IXTT64N25P		64	0.049	3450	105	200	0.31	400	TO-268AA
IXTQ64N25P		64	0.049	3450	105	200	0.31	400	TO-3P
IXTK82N25P		82	0.035	4800	142	200	0.25	500	TO-264
IXTT82N25P		82	0.035	4800	142	200	0.25	500	TO-268AA
IXTQ82N25P		82	0.035	4800	142	200	0.25	500	TO-3P
IXTK100N25P		100	0.027	6300	185	200	0.21	600	TO-264
IXTT100N25P		100	0.027	6300	185	200	0.21	600	TO-268AA
IXTQ100N25P		100	0.027	6300	185	200	0.21	600	TO-3P
IXTK120N25P		120	0.024	8700	185	200	0.18	700	TO-264
IXTP36N30P	300	36	0.11	2250	70	250	0.42	300	TO-220AB
IXTA36N30P		36	0.11	2250	70	250	0.42	300	TO-263AB
IXTQ36N30P		36	0.11	2250	70	250	0.42	300	TO-3P
IXTT52N30P		52	0.066	3490	110	250	0.31	400	TO-268AA
IXTQ52N30P		52	0.066	3490	110	250	0.31	400	TO-3P

©2023 Littelfuse, Inc

Polar™ Standard MOSFET

Part Number	V_{DSS}	$I_{D(cont)}$ Chip T_C = 25 °C	$R_{DS(on)}$ T_J = 25 °C	C_{iss} typ.	Q_g typ.	t_{rr} typ.	R_{thJC}	P_D	Package
	V	A	Ω	pF	nC	ns	K/W	W	
IXTT69N30P	300	69	0.0490	4960	156	330	0.25	500	TO-268AA
IXTQ69N30P		69	0.0490	4960	156	330	0.25	500	TO-3P
IXTH88N30P		88	0.0400	6300	180	250	0.21	600	TO-247AD
IXTK88N30P		88	0.0400	6300	180	250	0.21	600	TO-264
IXTT88N30P		88	0.0400	6300	180	250	0.21	600	TO-268AA
IXTQ88N30P		88	0.0400	6300	180	250	0.21	600	TO-3P
IXTK102N30P		102	0.0330	7500	224	250	0.18	700	TO-264
IXTK140N30P		140	0.2400	14800	185	250	0.12	1040	TO-264
IXTP12N50P	500	12	0.5000	1830	29	300	0.62	200	TO-220AB
IXTA12N50P		12	0.5000	1830	29	300	0.62	200	TO-263AB
IXTP16N50P		16	0.4000	2480	43	400	0.42	300	TO-220AB
IXTA16N50P		16	0.4000	2480	43	400	0.42	300	TO-263AB
IXTQ16N50P		16	0.4000	2480	43	400	0.42	300	TO-3P
IXTH22N50P		22	0.2700	2880	50	400	0.35	350	TO-247AD
IXTQ22N50P		22	0.2700	2880	50	400	0.35	350	TO-3P
IXTT26N50P		26	0.2300	3600	65	300	0.31	400	TO-268AA
IXTQ26N50P		26	0.2300	3600	65	300	0.31	400	TO-3P
IXTH30N50P		30	0.2000	4150	70	400	0.27	460	TO-247AD
IXTT30N50P		30	0.2000	4150	70	400	0.27	460	TO-268AA
IXTQ30N50P		30	0.2000	4150	70	400	0.27	460	TO-3P
IXTH36N50P		36	0.1700	4700	82	400	0.23	540	TO-247AD
IXTT36N50P		36	0.1700	4700	82	400	0.23	540	TO-268AA
IXTQ36N50P		36	0.1700	4700	82	400	0.23	540	TO-3P
IXTQ44N50P		44	0.1400	5440	98	400	0.19	650	TO-3P
IXTP10N60P	600	10	0.7400	1720	32	500	0.62	200	TO-220AB
IXTA10N60P		10	0.7400	1720	32	500	0.62	200	TO-263AB
IXTP14N60P		14	0.5500	2500	36	500	0.42	300	TO-220AB
IXTA14N60P		14	0.5500	2500	36	500	0.42	300	TO-263AB
IXTQ14N60P		14	0.5500	2500	36	500	0.42	300	TO-3P
IXTQ18N60P		18	0.4200	2500	49	500	0.35	360	TO-3P
IXTQ22N60P		22	0.3500	3600	62	500	0.31	400	TO-3P
IXTH26N60P		26	0.2700	4150	72	500	0.27	460	TO-247AD
IXTT26N60P		26	0.2700	4150	72	500	0.27	460	TO-268AA
IXTQ26N60P		26	0.2700	4150	72	500	0.27	460	TO-3P
IXTH30N60P		30	0.2400	5050	82	500	0.23	540	TO-247AD
IXTT30N60P		30	0.2400	5050	82	500	0.23	540	TO-268AA
IXTQ30N60P		30	0.2400	5050	82	500	0.23	540	TO-3P
IXTP05N100P	1000	0.5	30.000	196	8.1	750	2.50	50	TO-220AB
IXTA05N100P		0.5	30.000	196	8.1	750	2.50	50	TO-263AB
IXTP08N100P		0.8	20.000	240	11.3	750	3.00	42	TO-220AB
IXTY08N100P		0.8	20.000	240	11.3	750	3.00	42	TO-252AA
IXTA08N100P		0.8	20.000	240	11.3	750	3.00	42	TO-263AB
IXTP1N100P		1	15.000	331	15.5	750	2.50	50	TO-220AB
IXTY1N100P		1	15.000	331	15.5	750	2.50	50	TO-252AA
IXTA1N100P		1	15.000	331	15.5	750	2.50	50	TO-263AB
IXTP1R4N100P		1.4	11.000	450	17.8	750	2.00	63	TO-220AB
IXTY1R4N100P		1.4	11.000	450	17.8	750	2.00	63	TO-252AA
IXTA1R4N100P		1.4	11.000	666	17.8	750	2.00	63	TO-263AB
IXTP2N100P		2	7.500	655	24.3	800	1.45	86	TO-220AB
IXTY2N100P		2	7.500	655	24.3	800	1.45	86	TO-252AA
IXTA2N100P		2	7.500	655	24.3	800	1.45	86	TO-263AB
IXTP3N100P		3	4.800	1100	39	820	1.00	125	TO-220AB
IXTH3N100P		3	4.800	1100	39	820	1.00	125	TO-247AD
IXTA3N100P		3	4.800	1100	39	820	1.00	125	TO-263AB
IXTP02N120P	1200	0.2	75.000	104	4.7	1600	3.80	33	TO-220AB
IXTY02N120P		0.2	75.000	104	4.7	1600	3.80	33	TO-252AA
IXTP06N120P		0.6	34.000	236	13.3	900	3.00	42	TO-220AB
IXTA06N120P		0.6	34.000	236	13.3	900	3.00	42	TO-263AB
IXTP08N120P		0.8	25.000	333	14	900	2.50	50	TO-220AB
IXTA08N120P		0.8	25.000	333	14	900	2.50	50	TO-263AB
IXTP1N120P		1	20.000	445	17.6	900	2.00	63	TO-220AB
IXTA1N120P		1	20.000	445	17.6	900	2.00	63	TO-263AB
IXTP1R4N120P		1.4	13.000	666	24.8	900	1.45	86	TO-220AB
IXTY1R4N120P		1.4	13.000	666	24.8	900	1.45	86	TO-252AA
IXTY1R4N120PHV		1.4	13.000	666	24.8	900	1.45	86	TO-252AA
IXTA1R4N120P		1.4	13.000	725	24.8	900	1.45	86	TO-263AB
IXTP2R4N120P		2.4	7.500	1207	37	920	1.00	125	TO-220AB
IXTH2R4N120P		2.4	7.500	1207	37	920	1.00	125	TO-247AD
IXTA2R4N120P		2.4	7.500	1207	37	920	1.00	125	TO-263AB

X005a
TO-220AB

X015a
PLUS247

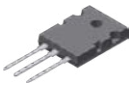
X020a
TO-264

X027a
SOT-227B miniBLOC

X011b
TO-263AB

X016a
ISOPLUS247™

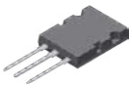
X021a
PLUS264

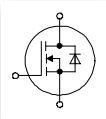

X014a
TO-247AD

X019
TO-268AA

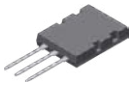
X022a
ISOPLUS264™

Polar™ HiPerFET ™ MOSFET With Fast Intrinsic Diode

Part Number	V_{DSS}	$I_{D(cont)}$ Chip $T_C = 25$ °C	$R_{DS(on)}$ $T_J = 25$ °C	C_{iss} typ.	Q_g typ.	t_{rr} typ.	R_{thJC}	P_D	Package
	V	A	Ω	pF	nC	ns	K/W	W	
IXFH110N10P	100	110	0.015	3550	110	150	0.31	480	TO-247AD
IXFR200N10P		120	0.009	7600	235	150	0.50	300	ISOPLUS247™
IXFH140N10P		140	0.011	4700	155	150	0.25	600	TO-247AD
IXFT140N10P		140	0.011	4700	155	150	0.25	600	TO-268AA
IXFH170N10P		170	0.009	6000	198	150	0.21	715	TO-247AD
IXFK170N10P		170	0.009	6000	198	150	0.21	715	TO-264
IXFX200N10P		200	0.0075	7600	235	150	0.18	830	PLUS247
IXFN200N10P		200	0.0075	7600	235	150	0.22	680	SOT-227B miniBLOC
IXFK200N10P		200	0.0075	7600	235	150	0.18	830	TO-264
IXFX250N10P		250	0.0065	16000	205	200	0.12	1250	PLUS247
IXFK250N10P		250	0.0065	16000	205	200	0.12	1250	TO-264
IXFN300N10P		295	0.0055	23	279	200	0.14	1070	SOT-227B miniBLOC
IXFB300N10P		300	0.0055	23	279	200	0.10	1500	PLUS264
IXFH96N15P	150	96	0.024	3500	110	200	0.31	480	TO-247AD
IXFR180N15P		100	0.013	7000	240	200	0.50	300	ISOPLUS247™
IXFH120N15P		120	0.016	4900	150	200	0.25	600	TO-247AD
IXFT120N15P		120	0.016	4900	150	200	0.25	600	TO-268AA
IXFN180N15P		150	0.011	7000	240	200	0.22	680	SOT-227B miniBLOC
IXFH150N15P		150	0.013	5800	190	200	0.21	714	TO-247AD
IXFK150N15P		150	0.013	5800	190	200	0.21	714	TO-264
IXFX180N15P		180	0.011	7000	240	200	0.18	830	PLUS247
IXFK180N15P		180	0.011	7000	240	200	0.18	830	TO-264
IXFX220N15P		220	0.009	15.4	162	200	0.12	1250	PLUS247
IXFK220N15P		220	0.009	15.4	162	200	0.12	1250	TO-264
IXFH74N20P	200	74	0.034	3300	107	200	0.31	480	TO-247AD
IXFR140N20P		90	0.022	7500	240	200	0.50	300	ISOPLUS247™
IXFH96N20P		96	0.024	4800	145	200	0.25	600	TO-247AD
IXFT96N20P		96	0.024	4800	145	200	0.25	600	TO-268AA
IXFN140N20P		115	0.018	7500	240	200	0.22	680	SOT-227B miniBLOC
IXFH120N20P		120	0.022	6000	152	200	0.21	714	TO-247AD
IXFK120N20P		120	0.022	6000	152	200	0.21	714	TO-264
IXFK140N20P		140	0.018	7500	240	200	0.18	830	TO-264
IXFX170N20P		170	0.014	11.4	185	200	0.12	1250	PLUS247
IXFK170N20P		170	0.014	11.4	185	200	0.12	1250	TO-264
IXFN210N20P		188	0.0105	18.6	255	200	0.14	1070	SOT-227B miniBLOC
IXFB210N20P		210	0.0105	18.6	255	200	0.10	1500	PLUS264
IXFH100N25P	250	100	0.027	6300	185	200	0.21	600	TO-247AD
IXFX120N25P		120	0.024	8700	185	200	0.18	700	PLUS247
IXFK120N25P		120	0.024	8700	185	200	0.18	700	TO-264
IXFH52N30P	300	52	0.066	3490	110	200	0.31	400	TO-247AD
IXFR102N30P		60	0.036	7500	224	200	0.50	250	ISOPLUS247™
IXFH69N30P		69	0.049	4960	156	200	0.25	500	TO-247AD
IXFT69N30P		69	0.049	4960	156	200	0.25	500	TO-268AA
IXFR140N30P		70	0.026	14800	185	200	0.35	360	ISOPLUS247™

©2023 Littelfuse, Inc

Polar™ HiPerFET ™ MOSFET With Fast Intrinsic Diode

Part Number	V_{DSS}	$I_{D(cont)}$ Chip T_C = 25 °C	$R_{DS(on)}$ T_J = 25 °C	C_{iss} typ.	Q_g typ.	t_{rr} typ.	R_{thJC}	P_D	Package
	V	A	Ω	pF	nC	ns	K/W	W	
IXFN102N30P	300	86	0.0330	7500	224	200	0.22	570	SOT-227B miniBLOC
IXFH88N30P		88	0.0400	6300	180	200	0.21	600	TO-247AD
IXFK88N30P		88	0.0400	6300	180	200	0.21	600	TO-264
IXFT88N30P		88	0.0400	6300	180	200	0.21	600	TO-268AA
IXFK102N30P		102	0.0330	7500	224	200	0.18	700	TO-264
IXFN140N30P		110	0.0240	14800	185	200	0.18	700	SOT-227B miniBLOC
IXFN170N30P		138	0.0018	20	258	200	0.14	890	SOT-227B miniBLOC
IXFX140N30P		140	0.0240	14800	185	200	0.12	1040	PLUS247
IXFK140N30P		140	0.0240	14800	185	200	0.12	1040	TO-264
IXFB170N30P		170	0.0180	20	258	200	0.10	1250	PLUS264
IXFP12N50P	500	12	0.500	1830	29	200	0.62	200	TO-220AB
IXFA12N50P		12	0.500	1830	29	200	0.62	200	TO-263AB
IXFP16N50P		16	0.400	2480	43	200	0.42	300	TO-220AB
IXFH16N50P		16	0.400	2480	43	200	0.42	300	TO-247AD
IXFA16N50P		16	0.400	2480	43	200	0.42	300	TO-263AB
IXFR36N50P		19	0.190	5500	93	200	0.75	156	ISOPLUS247™
IXFH22N50P		22	0.270	2880	50	200	0.35	350	TO-247AD
IXFR44N50P		24	0.150	5440	98	200	0.60	208	ISOPLUS247™
IXFH26N50P		26	0.230	3600	60	200	0.31	400	TO-247AD
IXFH30N50P		30	0.200	4150	70	200	0.27	460	TO-247AD
IXFT30N50P		30	0.200	4150	70	200	0.27	460	TO-268AA
IXFH36N50P		36	0.170	5500	93	200	0.23	540	TO-247AD
IXFT36N50P		36	0.170	5500	93	200	0.23	540	TO-268AA
IXFR64N50P		37	0.095	9700	150	200	0.42	300	ISOPLUS247™
IXFH44N50P		44	0.140	5440	98	200	0.19	650	TO-247AD
IXFK44N50P		44	0.140	5440	98	200	0.19	650	TO-264
IXFT44N50P		44	0.140	5440	98	200	0.19	650	TO-268AA
IXFR80N50P		45	0.072	12700	197	200	0.35	360	ISOPLUS247™
IXFN64N50P		50	0.085	9700	150	200	0.20	625	SOT-227B miniBLOC
IXFX64N50P		64	0.085	9700	150	200	0.15	830	PLUS247
IXFK64N50P		64	0.085	9700	150	200	0.15	830	TO-264
IXFN80N50P		66	0.065	12700	195	200	0.18	700	SOT-227B miniBLOC
IXFL100N50P		68	0.052	20000	240	200	0.20	625	ISOPLUS264™
IXFX80N50P		80	0.065	12700	197	200	0.12	1040	PLUS247
IXFK80N50P		80	0.065	12700	197	200	0.12	1040	TO-264
IXFN100N50P		90	0.049	20000	240	200	0.12	1040	SOT-227B miniBLOC
IXFB100N50P		100	0.049	20000	240	200	0.10	1250	PLUS264
IXFP10N60P	600	10	0.740	1720	32	200	0.62	200	TO-220AB
IXFA10N60P		10	0.740	1720	32	200	0.62	200	TO-263AB
IXFP14N60P		14	0.550	2500	36	200	0.42	300	TO-220AB
IXFH14N60P		14	0.550	2500	36	200	0.42	300	TO-247AD
IXFA14N60P		14	0.550	2500	36	200	0.42	300	TO-263AB
IXFR30N60P		15	0.250	3820	85	200	0.75	166	ISOPLUS247™
IXFH18N60P		18	0.400	2500	50	200	0.35	360	TO-247AD
IXFR36N60P		20	0.200	5800	102	200	0.60	208	ISOPLUS247™
IXFH22N60P		22	0.350	3600	58	200	0.31	400	TO-247AD
IXFH26N60P		26	0.270	4150	72	200	0.27	460	TO-247AD
IXFT26N60P		26	0.270	4150	72	200	0.27	460	TO-268AA
IXFH30N60P		30	0.240	4000	82	200	0.25	500	TO-247AD
IXFT30N60P		30	0.240	4000	82	200	0.25	500	TO-268AA
IXFR48N60P		32	0.150	8860	150	200	0.42	300	ISOPLUS247™
IXFR64N60P		36	0.105	12000	200	200	0.35	360	ISOPLUS247™
IXFH36N60P		36	0.190	5800	102	200	0.19	650	TO-247AD
IXFK36N60P		36	0.190	5800	102	200	0.19	650	TO-264
IXFT36N60P		36	0.190	5800	102	200	0.19	650	TO-268AA
IXFN48N60P		40	0.140	8860	150	200	0.20	625	SOT-227B miniBLOC
IXFX48N60P		48	0.135	8860	150	200	0.15	830	PLUS247
IXFK48N60P		48	0.135	8860	150	200	0.15	830	TO-264
IXFN64N60P		50	0.096	12000	200	200	0.18	700	SOT-227B miniBLOC
IXFL82N60P		55	0.078	23000	240	200	0.20	625	ISOPLUS264™
IXFX64N60P		64	0.096	12000	200	200	0.12	1040	PLUS247
IXFK64N60P		64	0.096	12000	200	200	0.12	1040	TO-264
IXFN82N60P		72	0.075	23000	240	200	0.12	1040	SOT-227B miniBLOC
IXFB82N60P		82	0.075	23000	240	200	0.10	1250	PLUS264

X005a
TO-220AB

X011b
TO-263AB

X014a
TO-247AD

X015a
PLUS247

X016a
ISOPLUS247™

X017a
TO-3P

X019
TO-268AA

X020a
TO-264

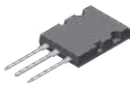
X021a
PLUS264

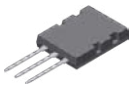
X022a
ISOPLUS264™

X022e
ISOPLUS264/i5-Pak™

X027a
SOT-227B miniBLOC

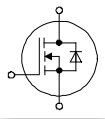

Polar™ HiPerFET ™ MOSFET With Fast Intrinsic Diode

Part Number	V_{DSS}	$I_{D(cont)}$ Chip T_C = 25 °C	$R_{DS(on)}$ T_J = 25 °C	C_{iss} typ.	Q_g typ.	t_{rr} typ.	R_{thJC}	P_D	Package
	V	A	Ω	pF	nC	ns	K/W	W	
IXFP7N80P	800	7	1.440	1800	32	250	0.62	200	TO-220AB
IXFA7N80P		7	1.440	1800	32	250	0.62	200	TO-263AB
IXFR20N80P		10	0.570	4685	86	250	0.80	160	ISOPLUS247™
IXFP10N80P		10	1.100	2050	40	250	0.42	300	TO-220AB
IXFH10N80P		10	1.100	2050	40	250	0.42	300	TO-247AD
IXFA10N80P		10	1.100	2050	40	250	0.42	300	TO-263AB
IXFQ10N80P		10	1.100	2050	40	250	0.42	300	X017a
IXFH12N80P		12	0.850	2800	51	250	0.35	360	TO-247AD
IXFR24N80P		13	0.420	7200	105	250	0.60	208	ISOPLUS247™
IXFH14N80P		14	0.720	3900	61	250	0.31	400	TO-247AD
IXFT14N80P		14	0.720	3900	61	250	0.31	400	TO-268AA
IXFQ14N80P		14	0.720	3900	61	250	0.31	400	X017a
IXFH16N80P		16	0.600	4000	70	250	0.27	460	TO-247AD
IXFT16N80P		16	0.600	4000	70	250	0.27	460	TO-268AA
IXFR32N80P		20	0.290	8800	150	250	0.42	300	ISOPLUS247™
IXFH20N80P		20	0.520	4685	86	250	0.25	500	TO-247AD
IXFT20N80P		20	0.520	4685	86	250	0.25	500	TO-268AA
IXFH24N80P		24	0.400	5800	100	250	0.19	650	TO-247AD
IXFK24N80P		24	0.400	7200	105	250	0.19	650	TO-264
IXFT24N80P		24	0.400	5800	100	250	0.19	650	TO-268AA
IXFR44N80P		26	0.190	12000	200	250	0.35	360	ISOPLUS247™
IXFN32N80P		29	0.270	8820	150	250	0.20	625	SOT-227B miniBLOC
IXFX32N80P		32	0.270	8800	150	250	0.15	830	PLUS247
IXFK32N80P		32	0.270	8800	150	250	0.15	830	TO-264
IXFN44N80P		39	0.190	18000	200	250	0.18	694	SOT-227B miniBLOC
IXFL60N80P		40	0.150	18000	250	250	0.20	625	ISOPLUS264™
IXFX44N80P		44	0.190	12000	198	250	0.12	1200	PLUS247
IXFK44N80P		44	0.190	12000	198	250	0.12	1200	TO-264
IXFN60N80P		53	0.140	18000	250	250	0.12	1040	SOT-227B miniBLOC
IXFB60N80P		60	0.140	18000	250	250	0.10	1250	PLUS264
IXFR18N90P	900	10.5	0.660	5230	97	300	0.62	200	ISOPLUS247™
IXFH12N90P		12	0.900	3080	56	300	0.33	380	TO-247AD
IXFR24N90P		13	0.460	7200	130	300	0.54	230	ISOPLUS247™
IXFH18N90P		18	0.600	5230	97	300	0.23	540	TO-247AD
IXFT18N90P		18	0.600	5230	97	300	0.23	540	TO-268AA
IXFR40N90P		21	0.230	14000	230	300	0.42	300	ISOPLUS247™
IXFH24N90P		24	0.420	7200	130	300	0.19	660	TO-247AD
IXFT24N90P		24	0.420	7200	130	300	0.19	660	TO-268AA
IXFK32N90P		32	0.300	10600	215	300	0.13	960	TO-264
IXFX32N90P		32	0.300	10600	215	300	0.13	960	PLUS247
IXFN40N90P		33	0.21	14000	230	300	0.18	695	SOT-227B miniBLOC
IXFX40N90P		40	0.21	14000	230	300	0.13	960	PLUS247
IXFK40N90P		40	0.21	14000	230	300	0.13	960	TO-264
IXFN52N90P		43	0.16	19000	308	300	0.14	890	SOT-227B miniBLOC

©2023 Littelfuse, Inc

Polar™ HiPerFET ™ MOSFET With Fast Intrinsic Diode

Part Number	V_{DSS}	$I_{D(cont)}$ Chip T_C = 25 °C	$R_{DS(on)}$ T_J = 25 °C	C_{iss} typ.	Q_g typ.	t_{rr} typ.	R_{thJC}	P_D	Package
	V	A	Ω	pF	nC	ns	K/W	W	
IXFB52N90P	900	52	0.210	19000	308	300	0.13	1250	PLUS264
IXFN56N90P		56	0.210	23000	375	300	0.13	1000	SOT-227B miniBLOC
IXFP4N100P	1000	4	0.210	1456	26	300	0.83	150	TO-220AB
IXFA4N100P		4	0.160	1456	26	300	0.83	150	TO-263AB
IXFP5N100P		5	0.160	1830	33.4	200	0.50	250	TO-220AB
IXFH5N100P		5	0.145	1830	33.4	200	0.50	250	TO-247AD
IXFA5N100P		5	3.30	1830	33.4	200	0.50	250	TO-263AB
IXFA7N100P		7	3.30	2590	47	300	0.42	300	TO-263AB
IXFH7N100P		7	2.80	2590	47	300	0.42	300	TO-247AD
IXFP7N100P		7	2.80	2590	47	300	0.42	300	TO-220AB
IXFH10N100P		10	2.80	3030	56	300	0.33	380	TO-247AD
IXFR20N100P		11	1.90	7300	126	300	0.54	230	ISOPLUS247™
IXFH12N100P		12	1.90	4080	80	300	0.27	463	TO-247AD
IXFR26N100P		15	1.90	11900	197	300	0.43	290	ISOPLUS247™
IXFH15N100P		15	1.40	5140	97	300	0.23	543	TO-247AD
IXFR32N100P		18	0.64	14200	225	300	0.39	320	ISOPLUS247™
IXFH20N100P		20	1.05	7300	126	300	0.19	660	TO-247AD
IXFT20N100P		20	0.43	7300	126	300	0.19	660	TO-268AA
IXFL44N100P		22	0.76	19000	305	300	0.35	357	ISOPLUS264/i5-Pak™
IXFN26N100P		23	0.34	11900	197	300	0.21	595	SOT-227B miniBLOC
IXFX26N100P		26	0.57	11900	197	300	0.16	780	PLUS247
IXFK26N100P		26	0.57	11900	197	300	0.16	780	TO-264
IXFN32N100P		27	0.24	14200	225	300	0.18	690	SOT-227B miniBLOC
IXFL38N100P		29	0.39	24000	350	300	0.24	520	ISOPLUS264/i5-Pak™
IXFX32N100P		32	0.39	14200	225	300	0.13	960	PLUS247
IXFK32N100P		32	0.39	14200	225	300	0.13	960	TO-264
IXFN44N100P		37	0.32	19000	305	300	0.14	890	SOT-227B miniBLOC
IXFN38N100P		38	0.23	24000	350	300	0.125	1000	SOT-227B miniBLOC
IXFB44N100P		44	0.32	19000	305	300	0.10	1250	PLUS264
IXFL40N110P	1100	21	0.32	19000	310	300	0.35	357	ISOPLUS264/i5-Pak™
IXFL36N110P		26	0.22	23000	350	300	0.24	520	ISOPLUS264/i5-Pak™
IXFN40N110P		34	0.21	19000	310	300	0.14	890	SOT-227B miniBLOC
IXFB40N110P		40	0.22	19000	310	300	0.10	1250	PLUS264
IXFP6N120P	1200	6	0.28	2830	92	300	0.50	250	TO-220AB
IXFH6N120P		6	0.26	2830	92	300	0.50	250	TO-247AD
IXFA6N120P		6	0.26	2830	92	300	0.50	250	TO-263AB
IXFR16N120P		9	0.26	6900	120	300	0.54	230	ISOPLUS247™
IXFH12N120P		12	2.40	5400	103	300	0.23	543	TO-247AD
IXFR20N120P		13	2.40	12900	193	300	0.43	290	ISOPLUS247™
IXFR26N120P		15	2.40	14000	225	300	0.39	320	ISOPLUS247™
IXFH16N120P		16	1.04	6900	120	300	0.19	660	TO-247AD
IXFT16N120P		16	1.35	6900	120	300	0.19	660	TO-268AA
IXFL30N120P		18	0.63	19000	310	300	0.35	357	ISOPLUS264/i5-Pak™
IXFX20N120P		20	0.50	11100	193	300	0.16	780	PLUS247
IXFN20N120P		20	0.95	11100	193	300	0.21	595	SOT-227B miniBLOC
IXFK20N120P		20	0.95	11100	193	300	0.16	780	TO-264
IXFN26N120P		23	0.38	14000	225	300	0.18	695	SOT-227B miniBLOC
IXFL32N120P		24	0.57	21000	360	300	0.24	520	ISOPLUS264/i5-Pak™
IXFX26N120P		26	0.57	14000	225	300	0.13	960	PLUS247
IXFK26N120P		26	0.57	14000	225	300	0.13	960	TO-264
IXFB30N120P		30	0.46	22500	310	300	0.10	1250	PLUS264
IXFN30N120P		30	0.34	19000	310	300	0.14	890	SOT-227B miniBLOC
IXFN32N120P		32	0.46	21000	360	300	0.125	1000	SOT-227B miniBLOC

X005a
TO-220AB

X011b
TO-263AB

X014a
TO-247AD

X015a
PLUS247

X016a
ISOPLUS247™

X016c
ISO247™

X017a
TO-3P

X019
TO-268AA

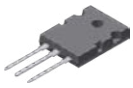
X020a
TO-264

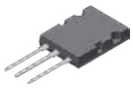
X021a
PLUS264

X022a
ISOPLUS264™

X027a
SOT-227B miniBLOC

X031a
SMPD-X

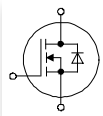

PolarP3™ HiPerFET™ Power MOSFET

Part Number	V_{DSS}	$I_{D(cont)}$ Chip T_C = 25 °C	$R_{DS(on)}$ T_J = 25 °C	C_{iss} typ.	Q_g typ.	t_{rr} max. (typ.)	R_{thJC}	P_D	Package
	V	A	Ω	pF	nC	ns	K/W	W	
IXFP36N30P3	300	36	0.1100	2040	30	-125	0.36	347	TO-220AB
IXFA36N30P3		36	0.1100	2040	30	-125	0.36	347	TO-263AB
IXFH94N30P3		94	0.0360	5510	102	250	0.12	1040	TO-247AD
IXFQ94N30P3		94	0.0360	5510	102	250	0.12	1040	TO-3P
IXFT94N30P3		94	0.0360	5510	102	250	0.12	1040	TO-268AA
IXFL210N30P3		108	0.0160	16200	268	250	0.24	520	ISOPLUS264™
IXFK120N30P3		120	0.0270	8630	150	250	0.11	1130	TO-264
IXFX120N30P3		120	0.0270	8630	150	250	0.11	1130	PLUS247
IXFK150N30P3		150	0.0190	12100	197	250	0.10	1300	TO-264
IXFX150N30P3		150	0.0190	12100	197	250	0.10	1300	PLUS247
IXFN210N30P3		192	0.0145	16200	268	250	0.08	1500	SOT-227B miniBLOC
IXFB210N30P3		210	0.0145	16200	268	250	0.07	1890	PLUS264
IXFJ26N50P3	500	14	0.265	2220	42	250	0.69	180	ISO247™
IXFA16N50P3		16	0.36	1515	29	250	0.38	330	TO-263AB
IXFH16N50P3		16	0.36	1515	29	250	0.38	330	TO-247AD
IXFP16N50P3		16	0.36	1515	29	250	0.38	330	TO-220AB
IXFA20N50P3		20	0.3	1800	36	250	0.36	380	TO-263AB
IXFH20N50P3		20	0.3	1800	36	250	0.36	380	TO-247AD
IXFP20N50P3		20	0.3	1800	36	250	0.36	380	TO-220AB
IXFQ20N50P3		20	0.3	1800	36	250	0.36	380	TO-3P
IXFA26N50P3		26	0.23	2220	42	250	0.25	500	TO-263AB
IXFH26N50P3		26	0.23	2220	42	250	0.25	500	TO-247AD
IXFP26N50P3		26	0.23	2220	42	250	0.25	500	TO-220AB
IXFQ26N50P3		26	0.23	2220	42	250	0.25	500	TO-3P
IXFH34N50P3		34	0.17	3260	60	250	0.18	695	TO-247AD
IXFQ34N50P3		34	0.17	3260	60	250	0.18	695	TO-3P
IXFH60N50P3		60	0.1	6250	96	250	0.12	1040	TO-247AD
IXFQ60N50P3		60	0.1	6250	96	250	0.12	1040	TO-3P
IXFT60N50P3		60	0.1	6250	96	250	0.12	1040	TO-268AA
IXFL132N50P3		63	0.043	18600	250	250	0.24	520	ISOPLUS264™
IXFK78N50P3		78	0.068	9900	147	250	0.11	1130	TO-264
IXFX78N50P3		78	0.068	9900	147	250	0.11	1130	PLUS247
IXFK98N50P3		98	0.05	13100	197	250	0.096	1300	TO-264
IXFX98N50P3		98	0.05	13100	197	250	0.096	1300	PLUS247
IXFN132N50P3		112	0.039	18600	250	250	0.083	1500	SOT-227B miniBLOC
IXFB132N50P3		132	0.039	18600	250	250	0.066	1890	PLUS264

©2023 Littelfuse, Inc

PolarP3™ HiPerFET™ Power MOSFET

Part Number	V_{DSS}	$I_{D(cont)}$ Chip T_C = 25 °C	$R_{DS(on)}$ T_J = 25 °C	C_{iss} typ.	Q_g typ.	t_{rr} max. (typ.)	R_{thJC}	P_D	Package
	V	A	Ω	pF	nC	ns	K/W	W	
IXFA14N60P3	600	14	0.54	1480	25	250	0.38	327	TO-263AB
IXFH14N60P3		14	0.54	1480	25	250	0.38	327	TO-247AD
IXFP14N60P3		14	0.54	1480	25	250	0.38	327	TO-220AB
IXFA16N60P3		16	0.44	1830	36	250	0.36	347	TO-263AB
IXFH16N60P3		16	0.44	1830	36	250	0.36	347	TO-247AD
IXFP16N60P3		16	0.44	1830	36	250	0.36	347	TO-220AB
IXFA22N60P3		22	0.36	2600	38	250	0.25	500	TO-263AB
IXFH22N60P3		22	0.36	2600	38	250	0.25	500	TO-247AD
IXFP22N60P3		22	0.36	2600	38	250	0.25	500	TO-220AB
IXFQ22N60P3		22	0.36	2600	38	250	0.25	500	TO-3P
IXFH28N60P3		28	0.26	3560	50	250	0.18	695	TO-247AD
IXFQ28N60P3		28	0.26	3560	50	250	0.18	695	TO-3P
IXFH42N60P3		42	0.185	5150	78	250	0.15	830	TO-247AD
IXFR80N60P3		48	0.076	13100	190	250	0.23	540	ISOPLUS247™
IXFH50N60P3		50	0.145	6300	94	250	0.12	1040	TO-247AD
IXFQ50N60P3		50	0.145	6300	94	250	0.12	1040	TO-3P
IXFT50N60P3		50	0.145	6300	94	250	0.12	1040	TO-268AA
IXFK64N60P3		64	0.095	9900	145	250	0.11	1130	TO-264
IXFX64N60P3		64	0.095	9900	145	250	0.11	1130	PLUS247
IXFN80N60P3		66	0.077	13100	190	250	0.13	960	SOT-227B miniBLOC
IXFK80N60P3		80	0.07	13100	190	250	0.096	1300	TO-264
IXFX80N60P3		80	0.07	13100	190	250	0.096	1300	PLUS247
IXFN110N60P3		90	0.056	18000	245	250	0.083	1500	SOT-227B miniBLOC
IXFB110N60P3		110	0.056	18000	245	250	0.066	1890	PLUS264

PolarP3™ Power MOSFET

With Current & Temperature Sensing in SMPD Package

Part Number	V_{DSS}	$I_{D(cont)}$ Chip T_C = 25 °C	$R_{DS(on)}$ T_J = 25 °C	C_{iss} typ.	Q_g typ.	t_{rr} typ.	R_{thJC}	P_D	Package
	V	A	Ω	pF	nC	ns	K/W	W	
MMIX1T132N50P3	500	63	0.043	18600	267	600	0.24	520	SMPD-X

X004
TO-252AA

X005a
TO-220AB

X007a
TO-220ABFP

X011b
TO-263AB

X012c
TO-263AB

X014a
TO-247AD

X015a
PLUS247

X017a
TO-3P

X019a
TO-268AAHV

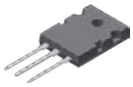
X020a
TO-264

X027a
SOT-227B miniBLOC

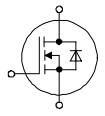

Ultra Junction Power MOSFET

Part Number	V_{DSS}	$I_{D(cont)}$ Chip T_C = 25 °C	$R_{DS(on)}$ T_J = 25 °C	C_{iss} typ.	Q_g typ.	t_{rr} typ.	R_{thJC}	P_D	Package
	V	A	Ω	pF	nC	ns	K/W	W	
135 V Ultra Junction X4-Class Power MOSFET									
IXTP170N13X4	135	170	0.0063	5460	105	86	0.31	480	TO-220AB
IXTA100N15X4	150	100	0.0115	3970	74	90	0.4	375	TO-263AB
IXTP100N15X4		100	0.0115	3970	74	90	0.4	375	TO-220AB
IXTH130N15X4		130	0.0085	4770	87	93	0.31	400	TO-247AD
IXTP130N15X4		130	0.0085	4770	87	93	0.31	400	TO-220AB
IXTA130N15X4		130	0.008	4770	87	93	0.31	400	TO-263AB
IXTA130N15X4-7		130	0.008	4770	87	93	0.31	400	TO-263AB
IXTH150N15X4		150	0.0072	5500	105	100	0.31	480	TO-247AD
IXTP150N15X4		150	0.0072	5500	105	100	0.31	480	TO-220AB
IXTA150N15X4		150	0.0069	5500	105	100	0.31	480	TO-263AB
IXTA150N15X4-7		150	0.0069	5500	105	100	0.31	480	TO-263AB
IXTH240N15X4		240	0.0044	8900	195	130	0.16	940	TO-247AD
IXTT240N15X4HV		240	0.0044	8900	195	130	0.16	940	TO-268AAHV
IXTK400N15X4		400	0.0031	14500	430	175	0.1	1500	TO-264
IXTN400N15X4		400	0.0031	14500	430	175	0.14	1070	SOT-227B miniBLOC
IXTX400N15X4		400	0.0031	14500	430	175	0.1	1500	PLUS247
200 V X3-Class HiPerFET™ Power MOSFET With Fast Body Diodes									
IXFA36N20X3	200	36	0.0450	1425	21	75	0.73	170	TO-263AB
IXFP36N20X3		36	0.0450	1425	21	75	0.73	170	TO-220AB
IXFP36N20X3M		36	0.0450	1425	21	75	3.50	36	TO-220FPAB
IXFY36N20X3		36	0.0450	1425	21	75	0.73	170	TO-252AA
IXFA50N20X3		50	0.0300	2100	33	70	0.52	240	TO-263AB
IXFP50N20X3		50	0.0300	2100	33	70	0.52	240	TO-220AB
IXFP50N20X3M		50	0.0300	2100	33	70	3.70	34	TO-220FPAB
IXFA72N20X3		72	0.0200	3780	55	95	0.39	320	TO-263AB
IXFP72N20X3		72	0.0200	3780	55	95	0.39	320	TO-220AB
IXFP72N20X3M		72	0.0200	3780	55	95	3.50	36	TO-220FPAB
IXFQ72N20X3		72	0.0200	3780	55	95	0.39	320	TO-3P
IXFA90N20X3		90	0.0128	5420	78	95	0.32	390	TO-263AB
IXFH90N20X3		90	0.0128	5420	78	95	0.32	390	TO-247AD
IXFP90N20X3		90	0.0128	5420	78	95	0.32	390	TO-220AB
IXFP90N20X3M		90	0.0128	5420	78	95	3.50	36	TO-220FPAB
IXFQ90N20X3		90	0.0128	5420	78	95	0.32	390	TO-3P

©2023 Littelfuse, Inc

Ultra Junction Power MOSFET

Part Number	V_{DSS}	$I_{D(cont)}$ Chip T_C = 25 °C	$R_{DS(on)}$ T_J = 25 °C	C_{iss} typ.	Q_g typ.	t_{rr} typ.	R_{thJC}	P_D	Package
	V	A	Ω	pF	nC	ns	K/W	W	
200 V X3-Class HiPerFET™ Power MOSFET With Fast Body Diodes									
IXFH140N20X3	200	140	0.0096	7660	127	105	0.26	480	TO-247AD
IXFQ140N20X3		140	0.0096	7660	127	105	0.26	480	TO-3P
IXFT140N20X3HV		140	0.0096	7660	127	105	0.26	480	TO-268AAHV
IXFN220N20X3		160	0.0062	13600	204	128	0.32	390	SOT-227B miniBLOC
IXFH180N20X3		180	0.0075	10300	154	120	0.17	735	TO-247AD
IXFT180N20X3HV		180	0.0075	10300	154	120	0.17	735	TO-268AAHV
IXFH220N20X3		220	0.0062	13600	204	128	0.14	890	TO-247AD
IXFK220N20X3		220	0.0062	13600	204	128	0.14	890	TO-264
IXFT220N20X3HV		220	0.0062	13600	204	128	0.14	890	TO-268AAHV
IXFK300N20X3		300	0.0040	23800	375	172	0.10	1250	TO-264
IXFN300N20X3		300	0.0035	23800	375	172	0.18	695	SOT-227B miniBLOC
IXFX300N20X3		300	0.0040	23800	375	172	0.10	1250	PLUS247
200V Ultra Junction X4-Class Power MOSFET									
IXTA86N20X4	200	86	0.013	2250	70	96	0.5	300	TO-263AB
IXTP86N20X4		86	0.013	2250	70	96	0.5	300	TO-220AB
IXTA94N20X4		94	0.0106	5050	77	130	0.42	360	TO-263AB
IXTP94N20X4		94	0.0106	5050	77	130	0.42	360	TO-220AB
IXTH94N20X4		94	0.0106	5050	77	130	0.42	360	TO-247AD
IXTH220N20X4		220	0.0055	12300	157	140	0.19	800	TO-247AD
IXTT220N20X4HV		220	0.0055	12300	157	140	0.19	800	TO-268AAHV
IXTP60N20X4		60	0.021	2450	33	107	0.6	250	TO-220AB
IXTH60N20X4		60	0.021	2450	33	107	0.6	250	TO-247AD
IXTA60N20X4		60	0.021	2450	33	107	0.6	250	TO-263AB
IXTH120N20X4		120	0.0095	6100	108	190	0.36	417	TO-247AD
IXTP120N20X4		120	0.0095	6100	108	190	0.36	417	TO-220AB
250V X3-Class HiPerFET™ Power MOSFET With Fast Body Diodes									
IXFA30N25X3	250	30	0.0600	1450	21	82	0.73	170	TO-263AB
IXFP30N25X3		30	0.0600	1450	21	82	0.73	170	TO-220AB
IXFP30N25X3M		30	0.0600	1450	21	82	3.50	36	TO-220FPAB
IXFY30N25X3		30	0.0600	1450	21	82	0.73	170	TO-252AA
IXFA44N25X3		44	0.0400	2200	33	87	0.52	240	TO-263AB
IXFJ80N25X3		44	0.0180	5430	83	120	1.20	104	X016c
IXFP44N25X3		44	0.0400	2200	33	87	0.52	240	TO-220AB
IXFP44N25X3M		44	0.0400	2220	33	87	3.70	34	TO-220FPAB
IXFA60N25X3		60	0.0230	3610	50	95	0.39	320	TO-263AB
IXFP60N25X3		60	0.0230	3610	50	95	0.39	320	TO-220AB
IXFP60N25X3M		60	0.0230	3610	50	95	3.50	36	TO-220FPAB
IXFQ60N25X3		60	0.0230	3610	50	95	0.39	320	TO-3P
IXFA80N25X3		80	0.0160	5430	83	120	0.32	390	TO-263AB
IXFH80N25X3		80	0.0160	5430	83	120	0.32	390	TO-247AD
IXFP80N25X3		80	0.0160	5430	83	120	0.32	390	TO-220AB
IXFQ80N25X3		80	0.0160	5430	83	120	0.32	390	TO-3P
IXFH120N25X3		120	0.0120	7870	122	140	0.26	480	TO-247AD
IXFQ120N25X3		120	0.0120	7870	122	140	0.26	480	TO-3P
IXFT120N25X3HV		120	0.0120	7870	122	140	0.26	480	TO-268AAHV
IXFH150N25X3		150	0.0090	10400	154	140	0.17	735	TO-247AD
IXFT150N25X3HV		150	0.0090	10400	154	140	0.17	735	TO-268AAHV
IXFH170N25X3		170	0.0074	13500	190	140	0.14	890	TO-247AD
IXFK170N25X3		170	0.0074	13500	190	140	0.14	890	TO-264
IXFN170N25X3		170	0.0074	13500	190	135	0.32	390	SOT-227B miniBLOC
IXFT170N25X3HV		170	0.0074	13500	190	140	0.14	890	TO-268AAHV
IXFK240N25X3		240	0.0050	23800	345	177	0.10	1250	TO-264
IXFN240N25X3		240	0.0045	23800	345	165	0.18	695	SOT-227B miniBLOC
IXFX240N25X3		240	0.0050	23800	345	177	0.10	1250	PLUS247

X004
TO-252AA

X005a
TO-220AB

X007a
TO-220FPAB

X011b
TO-263AB

X014a
TO-247AD

X015a
PLUS247

X016a
ISOPLUS247™

X017a
TO-3P

X019a
TO-268AAHV

X020a
TO-264

X027a
SOT-227B miniBLOC

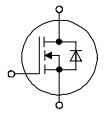

Ultra Junction Power MOSFET

Part Number	V_{DSS}	$I_{D(cont)}$ Chip T_C = 25 °C	$R_{DS(on)}$ T_J = 25 °C	C_{iss} typ.	Q_g typ.	t_{rr} typ.	R_{thJC}	P_D	Package
	V	A	Ω	pF	nC	ns	K/W	W	
300 V X3-Class HiPerFET™ Power MOSFET With Fast Body Diodes									
IXFA26N30X3	300	26	0.0660	1465	22	105	0.73	170	TO-263AB
IXFP26N30X3		26	0.0660	1465	22	105	0.73	170	TO-220AB
IXFY26N30X3		26	0.0660	1465	22	105	0.73	170	TO-252AA
IXFA38N30X3		38	0.0500	2240	35	90	0.52	240	TO-263AB
IXFP38N30X3		38	0.0500	2240	35	90	0.52	240	TO-220AB
IXFP38N30X3M		38	0.0500	2440	35	90	3.70	34	TO-220FPAB
IXFA56N30X3		56	0.0270	3750	56	115	0.39	320	TO-263AB
IXFH56N30X3		56	0.0270	3750	56	115	0.39	320	TO-247AD
IXFP56N30X3		56	0.0270	3750	56	115	0.39	320	TO-220AB
IXFP56N30X3M		56	0.0270	3750	56	115	3.50	36	TO-220FPAB
IXFA72N30X3		72	0.0190	5400	82	100	0.32	390	TO-263AB
IXFH72N30X3		72	0.0190	5400	82	100	0.32	390	TO-247AD
IXFP72N30X3		72	0.0190	5400	82	100	0.32	390	TO-220AB
IXFP72N30X3M		72	0.0190	5400	82	100	3.50	36	TO-220FPAB
IXFQ72N30X3		72	0.0190	5400	82	100	0.32	390	TO-3P
IXFH100N30X3		100	0.0135	7660	122	130	0.26	48	TO-247AD
IXFT100N30X3HV		100	0.0135	7660	122	130	0.26	480	TO-268AAHV
IXFH120N30X3		120	0.0110	10500	170	145	0.17	735	TO-247AD
IXFT120N30X3HV		120	0.0110	10500	170	145	0.17	735	TO-268AAHV
IXFH150N30X3		150	0.0083	13100	254	167	0.14	890	TO-247AD
IXFK150N30X3		150	0.0083	13100	254	167	0.14	890	TO-264
IXFT150N30X3HV		150	0.0083	13100	254	167	0.14	890	TO-268AAHV
IXFK210N30X3		210	0.0055	24200	375	190	0.10	1250	TO-264
IXFN210N30X3		210	0.0046	24200	375	190	0.18	695	SOT-227B miniBLOC
IXFX210N30X3		210	0.0055	24200	375	190	0.10	1250	PLUS247

©2023 Littelfuse, Inc

Ultra Junction Power MOSFET

Part Number	V_{DSS}	$I_{D(cont)}$ Chip T_C = 25 °C	$R_{DS(on)}$ T_J = 25 °C	C_{iss} typ.	Q_g typ.	t_{rr} typ.	R_{thJC}	P_D	Package
	V	A	Ω	pF	nC	ns	K/W	W	
650V X2-Class Power MOSFET									
IXTP2N65X2	650	2	2.300	180	4.3	137	2.27	55	TO-220AB
IXTY2N65X2		2	2.300	180	4.3	137	2.27	55	TO-252AA
IXTA4N65X2		4	0.850	455	8.3	160	1.56	80	TO-263AB
IXTP4N65X2		4	0.850	455	8.3	160	1.56	80	TO-220AB
IXTY4N65X2		4	0.850	455	8.3	160	1.56	80	TO-252AA
IXTA8N65X2		8	0.500	800	12	200	0.83	150	TO-263AB
IXTP8N65X2		8	0.500	800	12	200	0.83	150	TO-220AB
IXTP8N65X2M		8	0.550	800	12	200	3.90	32	TO-220FPAB
IXTY8N65X2		8	0.500	800	12	200	0.83	150	TO-252AA
IXTA12N65X2		12	0.300	1100	17.7	270	0.69	180	TO-263AB
IXTH12N65X2		12	0.300	1100	17.7	270	0.69	180	TO-247AD
IXTP12N65X2		12	0.300	1100	17.7	270	0.69	180	TO-220AB
IXTP12N65X2M		12	0.300	1100	17.7	270	3.10	40	TO-220FPAB
IXTA20N65X2		20	0.185	1450	27	350	0.43	290	TO-263AB
IXTH20N65X2		20	0.185	1450	27	350	0.43	290	TO-247AD
IXTP20N65X2		20	0.185	1450	27	350	0.43	290	TO-220AB
IXTP20N65X2M		20	0.185	1450	27	350	3.50	36	TO-220FPAB
IXTA24N65X2		24	0.145	2060	36	390	0.32	390	TO-263AB
IXTH24N65X2		24	0.145	2060	36	390	0.32	390	TO-247AD
IXTP24N65X2		24	0.145	2060	36	390	0.32	390	TO-220AB
IXTP24N65X2M		24	0.145	2060	36	390	3.37	37	TO-220FPAB
IXTA30N65X2		30	0.120	2260	44	355	0.27	460	TO-263AB
IXTP30N65X2		30	0.120	2260	44	355	0.27	460	TO-247AD
IXTH30N65X2		30	0.120	2260	44	355	0.27	460	TO-247AD
IXTA34N65X2		34	0.096	3000	54	390	0.23	540	TO-263AB
IXTA34N65X2		34	0.096	3000	54	390	0.23	540	TO-263AB
IXTH34N65X2		34	0.096	3000	54	390	0.23	540	TO-247AD
IXTP34N65X2		34	0.096	3000	54	390	0.23	540	TO-220AB
IXTT34N65X2HV		34	0.096	3000	54	390	0.23	540	TO-268AAHV
IXTH48N65X2		48	0.065	4300	76	400	0.19	660	TO-247AD
IXTR102N65X2		54	0.033	10900	152	450	0.38	330	ISOPLUS247™
IXTH62N65X2		62	0.050	5800	100	445	0.16	780	TO-247AD
IXTN102N65X2		76	0.030	10900	152	450	0.21	595	SOT-227B miniBLOC
IXTH80N65X2		80	0.038	7800	137	465	0.14	890	TO-247AD
IXTK102N65X2		102	0.030	10900	152	450	0.12	1040	TO-264
IXTX102N65X2		102	0.030	10900	152	450	0.12	1040	PLUS247
IXTK120N65X2		120	0.023	13600	230	505	0.10	1250	TO-264
IXTQ34N65X2M		34	0.096	3000	54	390	2.9	43	TO-3P
IXTQ48N65X2M		48	0.065	4300	76	400	1.78	70	TO-3P
650V X2-Class HiPerFET™ Power MOSFET With Fast Body Diodes									
IXFA8N65X2	650	8	0.45	790	11	105	0.83	150	TO-263AB
IXFP8N65X2		8	0.45	790	11	105	0.83	150	TO-220AB
IXFY8N65X2		8	0.45	790	11	105	0.83	150	TO-252AA
IXFA12N65X2		12	0.31	1134	18.5	155	0.69	180	TO-263AB
IXFH12N65X2		12	0.31	1134	18.5	155	0.69	180	TO-247AD
IXFP12N65X2		12	0.31	1134	18.5	155	0.69	180	TO-220AB
IXFP12N65X2M		12	0.31	1134	18.5	155	3.10	40	TO-220FPAB
IXFA18N65X2		18	0.2	1520	29	135	0.43	290	TO-263AB
IXFH18N65X2		18	0.2	1520	29	135	0.43	290	TO-247AD
IXFP18N65X2		18	0.2	1520	29	135	0.43	290	TO-220AB
IXFP18N65X2M		18	0.2	1520	29	135	3.50	36	TO-220FPAB
IXFA22N65X2		22	0.145	2190	37	145	0.32	390	TO-263AB
IXFH22N65X2		22	0.145	2190	37	145	0.32	390	TO-247AD
IXFP22N65X2		22	0.145	2190	37	145	0.32	390	TO-220AB
IXFP22N65X2M		22	0.145	2190	37	145	3.37	37	TO-220FPAB

X003
TO-251AA

X004
TO-252AA

X005a
TO-220AB

X007a
TO-220FPAB

X011b
TO-263AB

L014d
TO-247-4L

X011c
TO-263ABHV

X014a
TO-247AD

X015a
PLUS247

X016c
ISO247™

X017a
TO-3P

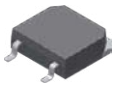
X019a
TO-268AAHV

X020a
TO-264

X021a
PLUS264

X027a
SOT-227B miniBLOC

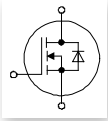

Ultra Junction Power MOSFET

Part Number	V_{DSS}	$I_{D(cont)}$ Chip T_C = 25 °C	$R_{DS(on)}$ T_J = 25 °C	C_{iss} typ.	Q_g typ.	t_{rr} typ.	R_{thJC}	P_D	Package
	V	A	Ω	pF	nC	ns	K/W	W	
650V X2-Class HiPerFET™ Power MOSFET With Fast Body Diodes									
IXFA34N65X2	650	34	0.100	3230	56	164	0.23	540	TO-263AB
IXFH34N65X2		34	0.100	3230	56	164	0.23	540	TO-247AD
IXFP34N65X2		34	0.100	3230	56	164	0.23	540	TO-220AB
IXFP34N65X2M		34	0.100	3230	56	164	3.10	40	TO-220FPAB
IXFH46N65X2		46	0.069	4570	98	180	0.19	660	TO-247AD
IXFH60N65X2		60	0.052	6300	108	180	0.16	780	TO-247AD
IXFH60N65X2-4		60	0.052	6300	108	180	0.16	780	TO-247-4L
IXFT60N65X2HV		60	0.052	6300	108	180	0.16	780	TO-268AAHV
IXFN100N65X2		78	0.030	10800	183	200	0.21	595	SOT-227B miniBLOC
IXFH80N65X2		80	0.038	8300	140	200	0.14	890	TO-247AD
IXFH80N65X2-4		80	0.038	8300	140	200	0.14	890	TO-247-4L
IXFK80N65X2		80	0.038	8300	140	200	0.14	890	TO-264
IXFT80N65X2HV		80	0.038	8300	140	200	0.14	890	TO-268AAHV
IXFK100N65X2		100	0.030	10800	183	200	0.12	1040	TO-264
IXFX100N65X2		100	0.030	10800	183	200	0.12	1040	PLUS247
IXFN120N65X2		108	0.024	14000	240	220	0.14	890	SOT-227B miniBLOC
IXFK120N65X2		120	0.024	14000	240	220	0.10	1250	TO-264
IXFX120N65X2		120	0.024	14000	240	220	0.10	1250	PLUS247
IXFN150N65X2		145	0.017	21000	355	260	0.12	1040	SOT-227B miniBLOC
IXFB150N65X2		150	0.017	21000	355	260	0.08	1560	PLUS264
IXFN170N65X2		170	0.013	27000	434	270	0.11	1170	SOT-227B miniBLOC

©2023 Littelfuse, Inc

Ultra Junction Power MOSFET

Part Number	V_{DSS}	$I_{D(cont)}$ Chip T_C = 25 °C	$R_{DS(on)}$ T_J = 25 °C	C_{iss} typ.	Q_g typ.	t_{rr} typ.	R_{thJC}	P_D	Package
	V	A	Ω	pF	nC	ns	K/W	W	
700 V X2-Class Power MOSFET									
IXTA4N70X2	700	4	0.850	386	11.8	186	1.56	80	TO-263AB
IXTP4N70X2		4	0.850	386	11.8	186	1.56	80	TO-220AB
IXTP4N70X2M		4	0.850	386	11.8	186	4.16	30	TO-220FPAB
IXTU4N70X2		4	0.850	386	11.8	186	1.56	80	TO-251AA
IXTY4N70X2		4	0.850	386	11.8	186	1.56	80	TO-252AA
IXTA8N70X2		8	0.500	800	12	200	0.83	150	TO-263AB
IXTP8N70X2		8	0.500	800	12	200	0.83	150	TO-220AB
IXTP8N70X2M		8	0.550	800	12	200	3.90	32	TO-220FPAB
IXTU8N70X2		8	0.500	800	12	200	0.83	150	TO-251AA
IXTY8N70X2		8	0.500	800	12	200	0.83	150	TO-252AA
IXTA12N70X2		12	0.300	960	19	270	0.69	180	TO-263AB
IXTH12N70X2		12	0.300	960	19	270	0.69	180	TO-247AD
IXTP12N70X2		12	0.300	960	19	270	0.69	180	TO-220AB
IXTP12N70X2M		12	0.300	960	19	270	3.10	40	TO-220FPAB
850 V X-Class HiPerFET™ Power MOSFET With Fast Body Diodes									
IXFA4N85X	850	3.5	2.500	247	7	170	0.830	150	TO-263AB
IXFP4N85X		3.5	2.500	247	7	170	0.830	150	TO-220AB
IXFP4N85XM		3.5	2.500	247	7	170	3.570	35	TO-220FPAB
IXFY4N85X		3.5	2.500	247	7	170	0.830	150	TO-252AA
IXFA8N85XHV		8	0.850	654	17	125	0.630	200	TO-263ABHV
IXFP8N85X		8	0.850	654	17	125	0.630	200	TO-220AB
IXFP8N85XM		8	0.850	654	17	125	3.780	33	TO-220FPAB
IXFQ8N85X		8	0.850	654	17	125	0.630	200	TO-3P
IXFJ20N85X		9.5	0.360	1660	63	190	1.130	110	ISO247™
IXFA14N85XHV		14	0.550	1043	30	116	0.270	460	TO-263ABHV
IXFH14N85X		14	0.550	1043	30	116	0.270	460	TO-247AD
IXFP14N85X		14	0.550	1043	30	116	0.270	460	TO-220AB
IXFP14N85XM		14	0.550	1043	30	116	3.300	38	TO-220FPAB
IXFA20N85XHV		20	0.330	1660	63	190	0.230	540	TO-263ABHV
IXFH20N85X		20	0.330	1660	63	190	0.230	540	TO-247AD
IXFP20N85X		20	0.330	1660	63	190	0.230	540	TO-220AB
IXFH30N85X		30	0.230	2460	68	160	0.180	695	TO-247AD
IXFT30N85XHV		30	0.230	2460	68	160	0.180	695	TO-268AAHV
IXFH40N85X		40	0.145	3700	98	200	0.145	860	TO-247AD
IXFT40N85XHV		40	0.145	3700	98	200	0.145	860	TO-268AAHV
IXFH50N85X		50	0.105	4480	152	218	0.140	890	TO-247AD
IXFK50N85X		50	0.105	4480	152	218	0.140	890	TO-264
IXFT50N85XHV		50	0.105	4480	152	218	0.140	890	TO-268AAHV
IXFN66N85X		65	0.065	8900	230	250	0.150	830	SOT-227B miniBLOC
IXFK66N85X		66	0.065	8900	230	250	0.100	1250	TO-264
IXFX66N85X		66	0.065	8900	230	250	0.100	1250	PLUS247
IXFB90N85X		90	0.041	13300	340	250	0.070	1785	PLUS264
IXFN90N85X		90	0.041	13300	340	250	0.104	1200	SOT-227B miniBLOC
IXFN110N85X		110	0.033	17000	425	205	0.107	1170	SOT-227B miniBLOC
1000 V X-Class HiPerFET™ Power MOSFET With Fast Body Diodes									
IXFH26N100X	1000	26	0.32	3290	113	220	0.145	860	TO-247AD
IXFT26N100XHV		26	0.32	3290	113	220	0.145	860	TO-268AAHV
IXFH32N100X		32	0.22	4075	130	200	0.140	890	TO-247AD
IXFK32N100X		32	0.22	4075	130	200	0.140	890	TO-264
IXFT32N100XHV		32	0.22	4075	130	200	0.140	890	TO-268AAHV
IXFN52N100X		44	0.125	6725	245	260	0.150	830	SOT-227B miniBLOC
IXFK52N100X		52	0.125	6725	245	260	0.100	1250	TO-264
IXFX52N100X		52	0.125	6725	245	260	0.100	1250	PLUS247
IXFN70N100X		65	0.089	9150	350	310	0.104	1200	SOT-227B miniBLOC
IXFB70N100X		70	0.089	9160	350	310	0.070	1785	PLUS264
IXFN74N100X		74	0.0660	17000	425	290	0.107	1170	SOT-227B miniBLOC

Q3-Class HiPerFET™ Power MOSFET

Part Number	V_{DSS}	$I_{D(cont)}$ Chip T_C = 25 °C	$R_{DS(on)}$ T_J = 25 °C	C_{iss} typ.	Q_g typ.	t_{rr} max. (typ.)	R_{thJC}	P_D	Package
	V	A	Ω	pF	nC	ns	K/W	W	
IXFH70N20Q3	200	70	0.040	3150	67	250	0.18	690	TO-247AD
IXFT70N20Q3		70	0.040	3150	67	250	0.18	690	TO-268AA
IXFH50N30Q3	300	50	0.080	3160	65	250	0.18	690	TO-247AD
IXFT50N30Q3		50	0.080	3160	65	250	0.18	690	TO-268AA
IXFT70N30Q3		70	0.054	4735	98	250	0.15	830	TO-268AA
IXFH70N30Q3		70	0.054	4735	98	250	0.15	830	TO-247AD
IXFR44N50Q3	500	25	0.154	4800	93	250	0.41	300	ISOPLUS247™
IXFT30N50Q3		30	0.200	3200	62	250	0.18	690	TO-268AA
IXFH30N50Q3		30	0.200	3200	62	250	0.18	690	TO-247AD
IXFH44N50Q3		44	0.140	4800	93	250	0.15	830	TO-247AD
IXFT44N50Q3		44	0.140	4800	93	250	0.15	830	TO-268AA
IXFR64N50Q3		45	0.094	6950	145	250	0.25	500	ISOPLUS247™
IXFR80N50Q3		50	0.072	10000	200	250	0.22	570	ISOPLUS247™
IXFN80N50Q3		63	0.065	10000	200	250	0.16	780	SOT-227B miniBLOC
IXFK64N50Q3		64	0.085	6950	145	250	0.13	1000	TO-264
IXFX64N50Q3		64	0.085	6950	145	250	0.13	1000	PLUS247
IXFX80N50Q3		80	0.065	10000	200	250	0.10	1250	PLUS247
IXFK80N50Q3		80	0.065	10000	200	250	0.10	1250	TO-264
IXFN100N50Q3		82	0.049	13800	255	250	0.13	960	SOT-227B miniBLOC
IXFB100N50Q3		100	0.049	13800	255	250	0.08	1560	PLUS264
IXFR48N60Q3	600	32	0.154	7020	140	300	0.25	500	ISOPLUS247™
IXFR64N60Q3		42	0.104	9930	190	300	0.22	568	ISOPLUS247™
IXFK48N60Q3		48	0.140	7020	140	300	0.13	1000	TO-264
IXFX48N60Q3		48	0.140	7020	140	300	0.13	1000	PLUS247
IXFK64N60Q3		64	0.095	9930	190	300	0.10	1250	TO-264
IXFX64N60Q3		64	0.095	9930	190	300	0.10	1250	PLUS247
IXFN82N60Q3		66	0.075	13500	275	300	0.13	960	SOT-227B miniBLOC
IXFB82N60Q3		82	0.075	13500	275	300	0.08	1560	PLUS264
IXFR32N80Q3	800	24	0.300	6940	140	300	0.25	500	ISOPLUS247™
IXFK32N80Q3		32	0.270	6940	140	300	0.125	1000	TO-264
IXFX32N80Q3		32	0.270	6940	140	300	0.125	1000	PLUS247
IXFN44N80Q3		37	0.190	10950	185	300	0.16	780	SOT-227B miniBLOC
IXFX44N80Q3		44	0.190	10950	185	300	0.10	1250	PLUS247
IXFK44N80Q3		44	0.190	10950	185	300	0.10	1250	TO-264
IXFN62N80Q3		49	0.140	13600	270	300	0.13	960	SOT-227B miniBLOC
IXFB62N80Q3		62	0.140	13600	270	300	0.08	1560	PLUS264
IXFR15N100Q3	1000	10	1.200	3250	64	250	0.31	400	ISOPLUS247™
IXFT15N100Q3		15	1.050	3250	64	250	0.18	690	TO-268AA
IXFH15N100Q3		15	1.050	3250	64	250	0.18	690	TO-247AD
IXFH18N100Q3		18	0.660	4890	90	300	0.15	830	TO-247AD
IXFT18N100Q3		18	0.660	4890	90	300	0.15	830	TO-268AA
IXFR24N100Q3		18	0.490	7200	140	300	0.25	500	ISOPLUS247™
IXFR32N100Q3		23	0.350	10900	195	300	0.22	570	ISOPLUS247™
IXFK24N100Q3		24	0.440	7200	140	300	0.125	1000	TO-264
IXFX24N100Q3		24	0.440	7200	140	300	0.125	1000	PLUS247
IXFN32N100Q3		28	0.320	10900	195	300	0.16	780	SOT-227B miniBLOC
IXFK32N100Q3		32	0.320	10900	195	250	0.10	1250	TO-264
IXFX32N100Q3		32	0.320	10900	195	250	0.10	1250	PLUS247
IXFN44N100Q3		38	0.220	13600	264	300	0.13	960	SOT-227B miniBLOC
IXFB44N100Q3		44	0.220	13600	264	300	0.08	1560	PLUS264
IXFN40N110Q3	1100	35	0.260	14000	300	-434	0.13	960	SOT-227B miniBLOC
IXFB40N110Q3		40	0.260	14000	300	-434	0.08	1560	PLUS264

©2023 Littelfuse, Inc

X011c
TO-263ABHV

X014a
TO-247AD

X014c
TO-247HV

X015a
PLUS247

X015c
PLUS247HV

X016a
ISOPLUS247™

X016c
ISO247™

X019
TO-268AA

X020a
TO-264

X021a
PLUS264

X022e
ISOPLUS264/i5-Pak™

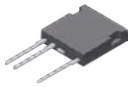

X024c
ISOPLUS i4-PAC™

X027a
SOT-227B miniBLOC

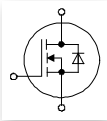

Very High Voltage Power MOSFET (2–4.7 kV)

Part Number	V_{DSS}	$I_{D(cont)}$ Chip T_C = 25 °C	$R_{DS(on)}$ T_J = 25 °C	C_{iss} typ.	Q_g typ.	t_{rr} typ.	R_{thJC}	P_D	Package
	V	A	Ω	pF	nC	ns	K/W	W	
IXTH1N200P3	2000	1	40	646	23.5	2300	1.00	125	TO-247AD
IXTH1N200P3HV		1	40	646	23.5	2300	1.00	125	TO-247HV
IXTA1N200P3HV		1	40	646	23.5	2300	1.00	125	TO-263ABHV
IXTH3N200P3HV		3	8	1860	70	420	0.24	520	TO-247HV
IXTT3N200P3HV		3	8	1860	70	420	0.24	520	TO-268AA
IXTF6N200P3		4	4.2	3700	143	520	0.58	215	ISOPLUS i4-PAC™
IXTX6N200P3HV		6	4	3700	143	520	0.13	960	PLUS247HV
IXTH06N220P3HV	2200	0.6	80	290	10.4	1100	1.20	104	TO-247HV
IXTH1R8N220P3HV		1.8	21.5	965	31	1300	0.64	194	TO-247HV
IXTA02N250HV	2500	0.2	450	116	7.4	1500	1.50	83	TO-263ABHV
IXTH02N250		0.2	450	116	7.4	1500	1.50	83	TO-247AD
IXTH05N250P3HV		0.5	110	303	10.5	1200	1.20	104	TO-247HV
IXTF1N250		1	40	1660	41	2500	1.13	110	ISOPLUS i4-PAC™
IXTH1R4N250P3		1.4	28	960	33	1800	0.64	195	TO-247AD
IXTH1N250		1.5	40	1660	41	2500	0.50	250	TO-247AD
IXTT1N250HV		1.5	40	1660	41	2500	0.50	250	TO-268AA
IXTN5N250		5	8.8	8560	200	1200	0.18	700	SOT-227B miniBLOC
IXTK5N250		5	8.8	8560	200	1200	0.13	960	TO-264
IXTX5N250		5	8.8	8560	200	1200	0.13	960	PLUS247
IXTH04N300P3HV	3000	0.4	190	283	13	1100	1.20	104	TO-247HV
IXTT1N300P3HV		1	50	895	30.6	1800	0.64	195	TO-268AA
IXTH1N300P3HV		1	50	895	30.6	1800	0.64	195	TO-247HV
IXTF2N300P3		1.6	21	1890	73	400	0.77	160	ISOPLUS i4-PAC™
IXTH2N300P3HV		2	21	1890	73	400	0.24	520	TO-247HV
IXTT2N300P3HV		2	21	1890	73	400	0.24	520	TO-268AA
IXTX4N300P3HV		4	12.5	3680	139	420	0.13	960	PLUS247HV
IXTH02N450HV	4500	0.2	625	246	10.6	1600	1.10	113	TO-247HV
IXTF02N450		0.2	625	246	10.6	1600	1.60	78	ISOPLUS i4-PAC™
IXTT02N450HV		0.2	625	246	10.6	1600	1.10	113	TO-268AA
IXTF1N450		0.9	80	1700	46	1750	0.77	165	ISOPLUS i4-PAC™
IXTT1N450HV		1	80	1700	46	1750	0.24	520	TO-268AA
IXTH1N450HV		1	80	1700	46	1750	0.24	520	TO-247HV
IXTF1R4N450		1.4	40	3300	88	660	0.65	190	ISOPLUS i4-PAC™
IXTX1R4N450HV		1.4	40	3300	88	660	0.13	960	PLUS247HV
IXTL2N450		2	20	6860	180	1750	0.56	220	ISOPLUS264/i5-Pak
IXTL2N470	4700	2	20	6860	180	1750	0.56	220	ISOPLUS264/i5-Pak

X005a
TO-220AB

X017a
TO-3P

X020a
TO-264

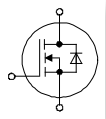

X011c
TO-263ABHV

X019
TO-268AA

X027a
SOT-227B miniBLOC

X014a
TO-247AD

X015a
PLUS247

X016c
ISO247™

X019a
TO-268AAHV

Legacy (Standard) Power MOSFET

Part Number	V_{DSS}	$I_{D(cont)}$ Chip T_C = 25 °C	$R_{DS(on)}$ T_J = 25 °C	C_{iss} typ.	Q_g typ.	t_{rr} typ.	R_{thJC}	P_D	Package
	V	A	Ω	pF	nC	ns	K/W	W	
IXTA05N100HV	1000	0.75	17	260	7.8	710	3.10	40	TO-263ABHV
IXTP3N120	1200	3.00	4.5	1050	39	700	0.62	200	TO-220AB
IXTH3N120		3.00	4.5	1050	39	700	0.80	100	TO-247AD
IXTA3N120		3.00	4.5	1050	39	700	0.62	200	TO-263AB
IXTA3N120HV		3.00	4.5	1050	39	700	0.62	200	TO-263ABHV
IXTH6N120		6.00	2.4	1950	56	850	0.42	300	TO-247AD
IXTT6N120		6.00	2.4	1950	56	850	0.42	300	TO-268AA
IXTA3N150HV	1500	3.00	7.3	1375	38.6	900	0.50	110	TO-263ABHV
IXTH3N150		3.00	7.3	1375	38.6	900	0.50	250	TO-247AD
IXTJ3N150		2.50	8	1375	38.6	900	1.13	250	ISO247™
IXTA4N150HV		4.00	6	1576	44.5	900	0.45	280	TO-263ABHV
IXTH4N150		4.00	6	1576	44.5	900	0.45	280	TO-247AD
IXTJ4N150		2.50	6	1576	44.5	900	1.13	110	ISO247™
IXTT4N150HV		4.00	6	1576	44.5	900	0.45	280	TO-268AAHV
IXTH6N150		6.00	3.5	2230	67	1500	0.23	540	TO-247AD
IXTJ6N150		3.00	3.85	2230	67	1500	1.00	125	ISO247™
IXTT6N150		6.00	3.5	2230	67	1500	0.23	540	TO-247AD
IXTT12N150HV		12	2	3720	106	1200	0.14	890	TO-268AAHV

©2023 Littelfuse, Inc

X014a
TO-247AD

X019
TO-268AA

X021a
PLUS264

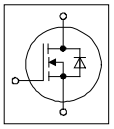

X015a
PLUS247

X020a
TO-264

X027a
SOT-227B miniBLOC

X017a
TO-3P

Linear L™ Power MOSFET with Extended FBSOAs

Part Number	V_{DSS}	$I_{D(cont)}$ Chip T_C = 25 °C	$R_{DS(on)}$ T_J = 25 °C	C_{iss} typ.	Q_g typ.	t_{rr} typ.	R_{thJC}	P_D	Package
	V	A	Ω	pF	nC	ns	K/W	W	
IXTH80N20L	200	80	0.032	6160	180	250	0.24	520	TO-247AD
IXTT80N20L		80	0.032	6160	180	250	0.24	520	TO-268AA
IXTN46N50L	500	46	0.16	7000	260	600	0.18	700	SOT-227B miniBLOC
IXTK46N50L		46	0.16	7000	260	600	0.18	700	TO-264
IXTX46N50L		46	0.16	7000	260	600	0.18	700	PLUS247
IXTH24N50L		24	0.3	2500	160	500	0.31	400	TO-247AD
IXTN30N100L	1000	30	0.45	13700	545	1000	0.156	800	SOT-227B miniBLOC
IXTB30N100L		30	0.45	13700	545	1000	0.156	800	PLUS264
IXTN22N100L		22	0.6	7050	270	1000	0.18	700	SOT-227B miniBLOC
IXTK22N100L		22	0.6	7050	270	1000	0.18	700	TO-264
IXTX22N100L		22	0.6	7050	270	1000	0.18	700	PLUS247
IXTH12N100L		12	1.3	2500	155	1000	0.31	400	TO-247AD
IXTH4N100L		4	2.8	1496	75	1100	0.43	290	TO-247AD
IXTK17N120L	1200	17.00	0.9	8300.00	155	1830	0.18	700	TO-264
IXTX17N120L		17.00	0.9	8300.00	155	1830	0.18	700	PLUS247
IXTN17N120L		15.0	0.9	8300.00	155	1830	0.23	540	SOT-227B miniBLOC
IXTK8N150L	1500	8.00	3.6	8000.00	250	1700	0.18	700	TO-264
IXTX8N150L		8.00	3.6	8000.00	250	1700	0.18	700	PLUS247
IXTN8N150L		7.50	3.6	8000.00	250	1700	0.23	545	SOT-227B miniBLOC
IXTH2N150L		2.00	15	1470.00	72	1860	0.43	290	TO-247AD
IXTN3N250L	2500	3.00	0.0083	5400.00	230	370	0.36	347	SOT-227B miniBLOC
IXTK3N250L		3.00	0.0083	5400.00	230	370	0.3	471	TO-264
IXTX3N250L		3.00	0.0083	5400.00	230	370	0.3	417	PLUS247

More Information

Straight Facts about Linear MOSFETs and their Applications

Linear MOSFETs are the most appropriate choice for linear-mode applications to ensure reliable operation. Read on to learn more.

Scan to visit now

Linear L2™ Power MOSFET With Extended FBSOAs

Part Number	V_{DSS}	$I_{D(cont)}$ Chip T_C = 25 °C	$R_{DS(on)}$ T_J = 25 °C	C_{iss} typ.	Q_g typ.	t_{rr} typ.	R_{thJC}	P_D	Package
	V	A	Ω	pF	nC	ns	K/W	W	
IXTP80N075L2	75	80	0.024	3600	103	160	0.35	357	TO-220AB
IXTA80N075L2		80	0.024	3600	103	160	0.35	357	TO-263AB
IXTH80N075L2		80	0.024	3600	103	160	0.35	357	TO-247AD
IXTH140N075L2		140	0.011	9300	275	200	0.23	540	TO-247AD
IXTT140N075L2HV		140	0.011	9300	275	200	0.23	540	TO-268AAHV
IXTN240N075L2		225	0.007	19000	546	206	0.17	735	SOT-227B miniBLOC
IXTK240N075L2		240	0.007	19000	546	206	0.13	960	TO-264
IXTX240N075L2		240	0.007	19000	546	206	0.13	960	PLUS247
IXTA64N10L2	100	64	0.032	3620	100	180	0.35	357	TO-263AB
IXTH64N10L2		64	0.032	3620	100	180	0.35	357	TO-247AD
IXTP64N10L2		64	0.032	3620	100	180	0.35	357	TO-220AB
IXTH75N10L2		75	0.021	8100	215	180	0.31	400	TO-247AD
IXTT75N10L2		75	0.021	8100	215	180	0.31	400	TO-268AA
IXTH110N10L2		110	0.018	10500	260	230	0.21	600	TO-247AD
IXTT110N10L2		110	0.018	10500	260	230	0.21	600	TO-268AA
IXTN200N10L2		178	0.011	23000	540	245	0.15	830	SOT-227B miniBLOC
IXTX200N10L2		200	0.011	23000	540	245	0.12	1040	PLUS247
IXTK200N10L2		200	0.011	23000	540	245	0.12	1040	TO-264
IXTH60N20L2	200	60	0.045	10500	255	330	0.23	540	TO-247AD
IXTT60N20L2		60	0.045	10500	255	330	0.23	540	TO-268AA
IXTQ60N20L2		60	0.045	10500	255	330	0.23	540	TO-3P
IXTN110N20L2		100	0.024	23000	500	420	0.17	735	SOT-227B miniBLOC
IXTX110N20L2		110	0.024	23000	500	420	0.13	960	PLUS247
IXTK110N20L2		110	0.024	23000	500	420	0.13	960	TO-264
IXTA30N25L2	250	30	0.140	3200	130	315	0.35	355	TO-263AB
IXTH30N25L2		30	0.140	3200	130	315	0.35	355	TO-247AD
IXTP30N25L2		30	0.140	3200	130	315	0.35	355	TO-220AB
IXTH44N25L2		44	0.075	5740	256	366	0.31	400	TO-247AD
IXTT44N25L2HV		44	0.075	5740	256	366	0.31	400	TO-268AAHV
IXTH58N25L2		58	0.064	9200	330	400	0.23	540	TO-247AD
IXTX90N25L2		90	0.033	23000	640	266	0.13	960	PLUS247
IXTN90N25L2		90	0.033	23000	640	266	0.17	735	SOT-227B miniBLOC
IXTK90N25L2		90	0.033	23000	640	266	0.13	960	TO-264
IXTH38N30L2	300	38	0.100	7200	260	420	0.31	400	TO-247AD
IXTT38N30L2		38	0.100	7200	260	420	0.31	400	TO-268AA
IXTH50N30L2		50	0.072	9300	330	430	0.23	540	TO-247AD
IXTK80N30L2		80	0.038	19100	660	485	0.13	960	TO-264
IXTN80N30L2		80	0.038	19100	660	485	0.17	735	SOT-227B miniBLOC
IXTX80N30L2		80	0.038	19100	660	485	0.13	960	PLUS247
IXTA15N50L2	500	15	0.480	4080	123	570	0.42	300	TO-263AB
IXTP15N50L2		15	0.480	4080	123	570	0.42	300	TO-220AB
IXTH15N50L2		15	0.480	4080	123	570	0.42	300	TO-247AD
IXTH30N50L2		30	0.200	8100	240	500	0.31	400	TO-247AD
IXTT30N50L2		30	0.200	8100	240	500	0.31	400	TO-268AA
IXTQ30N50L2		30	0.200	8100	240	500	0.31	400	TO-3P
IXTH40N50L2		40	0.170	10400	320	500	0.23	540	TO-247AD
IXTT40N50L2		40	0.170	10400	320	500	0.23	540	TO-268AA
IXTQ40N50L2		40	0.170	10400	320	500	0.23	540	TO-3P
IXTN60N50L2		53	0.100	24000	610	980	0.17	735	SOT-227B miniBLOC
IXTX60N50L2		60	0.100	24000	610	980	0.13	960	PLUS247
IXTK60N50L2		60	0.100	24000	610	980	0.13	960	TO-264
IXTH30N60L2	600	30	0.240	10700	335	710	0.23	540	TO-247AD
IXTT30N60L2		30	0.240	10700	335	710	0.23	540	TO-268AA
IXTQ30N60L2		30	0.240	10700	335	710	0.23	540	TO-3P

©2023 Littelfuse, Inc

X003
TO-251AA

X011b
TO-263AB

X015a
PLUS247

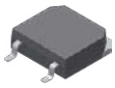

X019a
TO-268AAHV

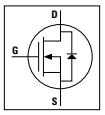

X004
TO-252AA

X011c
TO-263ABHV

X017a
TO-3P

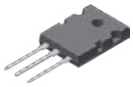

X020a
TO-264

X005a
TO-220AB

X014a
TO-247AD

X019
TO-268AA

X027a
SOT-227B miniBLOC

Depletion Mode Power MOSFETs

"Normally on" devices

Part Number	V_{DSS}	$I_{D(cont)}$ Chip T_C = 25 °C	$R_{DS(on)}$ T_J = 25 °C	$V_{GS(off)}$ max.	C_{iss} typ.	C_{rss} typ.	Q_g typ.	R_{thJC}	Package
	V	A	Ω	V	pF	pF	nC	K/W	
IXTH16N10D2	100	16.00	0.064	-4	5700	940	225	695	TO-247AD
IXTT16N10D2		16.00	0.064	-4	5700	940	225	695	TO-268AA
IXTH16N20D2	200	16.00	0.073	-4	5500	607	208	695	TO-247AD
IXTT16N20D2		16.00	0.073	-4	5500	607	208	695	TO-268AA
IXTP08N50D2	500	0.80	4.6	-4	312	11	12.7	60	TO-220AB
IXTY08N50D2		0.80	4.6	-4	312	11	12.7	60	TO-252AA
IXTA08N50D2		0.80	4.6	-4	312	11	12.7	60	TO-263AB
IXTP1R6N50D2		1.60	2.3	-4	645	16.5	23.7	100	TO-220AB
IXTY1R6N50D2		1.60	2.3	-4	645	16.5	23.7	100	TO-252AA
IXTA1R6N50D2		1.60	2.3	-4	645	16.5	23.7	100	TO-263AB
IXTP3N50D2		3.00	1.5	-4	1070	24	40	125	TO-220AB
IXTA3N50D2		3.00	1.5	-4	1070	24	40	125	TO-263AB
IXTP6N50D2		6.00	0.5	-4	2800	64	96	300	TO-220AB
IXTH6N50D2		6.00	0.5	-4	2800	64	96	300	TO-247AD
IXTA6N50D2		6.00	0.5	-4	2800	64	96	300	TO-263AB
IXTH16N50D2		16.00	0.24	-4	5250	130	199	695	TO-247AD
IXTT16N50D2		16.00	0.24	-4	5250	130	199	695	TO-268AA
IXTP08N100D2	1000	0.80	21	-4	325	6.5	14.6	60	TO-220AB
IXTY08N100D2		0.80	21	-4	325	6.5	14.6	60	TO-252AA
IXTA08N100D2		0.80	21	-4	325	6.5	14.6	60	TO-263AB
IXTA08N100D2HV		0.80	21	-4	325	6.5	14.6	60	TO-263ABHV
IXTP1R6N100D2		1.60	10	-4.5	645	11	27	100	TO-220AB
IXTY1R6N100D2		1.60	10	-4.5	645	11	27	100	TO-252AA
IXTA1R6N100D2		1.60	10	-4.5	645	11	27	100	TO-263AB
IXTP3N100D2		3.00	5.5	-4.5	1020	17	37.5	125	TO-220AB
IXTA3N100D2		3.00	5.5	-4.5	1020	17	37.5	125	TO-263AB
IXTA3N100D2HV		3.00	6	-4.5	1020	17	37.5	125	TO-263ABHV
IXTP6N100D2		6.00	2.2	-4.5	2650	41	95	300	TO-220AB
IXTH6N100D2		6.00	2.2	-4.5	2650	41	95	300	TO-247AD
IXTA6N100D2		6.00	2.2	-4.5	2650	41	95	300	TO-263AB
IXTT10N100D2		10.00	1.5	-4.5	5320	70	200	695	TO-268AA
IXTH10N100D2		10.00	1.5	-4.5	5320	70	200	695	TO-247AD
IXTT2N170D2	1700	2.00	6.5	-4	3650	80	110	568	TO-268AA
IXTH2N170D2		2.00	6.5	-4	3650	80	110	568	TO-247AD
IXTA1N170DHV		1.00	16	-4.5	3090	30	47	290	TO-263ABHV
IXTH1N170DHV		1.00	16	-4.5	3090	30	47	290	TO-247HV

X005a
TO-220AB

X011b
TO-263AB

X014a
TO-247AD

X015a
PLUS247

X016a
ISOPLUS247™

X017a
TO-3P

X019
TO-268AA

X020a
TO-264

X027a
SOT-227B miniBLOC

SOT-23

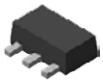
SOT-89

SOT-223

SOT-223-2L

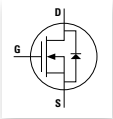

N-Channel Depletion Mode FETs

Our N-channel depletion mode field effect transistors (FETs) utilize a proprietary third-generation vertical DMOS process. This third-generation process realizes world-class, high-voltage MOSFET performance in an economical silicon gate process. This process also yields a robust device for low-power applications with high input impedance. These highly reliable FET devices have been used extensively in our solid state relays for industrial and telecommunications applications. These "normally on" MOSFETs are well suited for low-cost, pre-regulator applications that are tolerant of high voltage drops and power dissipation between the power source and the output regulator stage.

Part Number	$V_{(BR)DSX}$	$R_{DS(on)}$ max.	$V_{GS(off)}$ min.	$V_{GS(off)}$ max.	I_D min.	Package
	V	Ω	V	V	mA	
CPC3701	60	1	-1.4	-3.1	600	SOT-89
CPC3703	250	4	-1.6	-3.9	360	SOT-89
CPC3708	350	14	-2	-3.6	130	SOT-89 / SOT-223
CPC3710	250	10	-1.6	-3.9	220	SOT-89
CPC3714	350	14	-1.6	-3.9	240	SOT-89
CPC3720	350	22	-1.6	-3.9	130	SOT-89
CPC3730	350	35	-1.6	-3.9	140	SOT-89
CPC3902	250	2.5	-1.4	-3.1	400	SOT-89 / SOT-223
CPC3909	400	6	-1.4	-3.1	300	SOT-89 / SOT-223
CPC3960	600	44	-1.4	-3.1	100	SOT-223
CPC3980	800	45	-1.4	-3.1	100	SOT-223
CPC3981	800	45	-1.4	-3.1	100	SOT-223-2L
CPC3982	800	380	-1.4	-3.1	20	SOT-23

More Information

Depletion MOSFETs Bodo's Article

Littelfuse depletion-mode MOSFETs are available from 60 V to 1700V and can be used whenever application demands current at zero gate voltage. The applications highlighted in this article will help designers select these devices in various industrial applications.

Scan to visit now

©2023 Littelfuse, Inc

X005a
TO-220AB

X015a
PLUS247

X019
TO-268AA

X027a
SOT-227B miniBLOC

X011b
TO-263AB

X016a
ISOPLUS247™

X020a
TO-264

X014a
TO-247AD

X017a
TO-3P

X021a
PLUS264

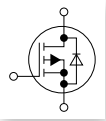

P-Channel PolarP™ Power MOSFET

Part Number	V_{DSS}	$I_{D(cont)}$ Chip T_C = 25 °C	$R_{DS(on)}$ T_J = 25 °C	C_{iss} typ.	Q_g typ.	t_{rr} typ.	R_{thJC}	P_D	Package
	V	A	Ω	pF	nC	ns	K/W	W	
IXTX32P60P	-600	-32	0.350	11100	196	480	0.14	890	PLUS247
IXTN32P60P		-32	0.350	11100	196	480	0.14	890	SOT-227B miniBLOC
IXTK32P60P		-32	0.350	11100	196	480	0.14	890	TO-264
IXTR32P60P		-18	0.385	11100	196	480	0.40	310	ISOPLUS247™
IXTH16P60P		-16	0.720	5120	92	440	0.27	460	TO-247AD
IXTT16P60P		-16	0.720	5120	92	440	0.27	460	TO-268AA
IXTR16P60P		-10	0.790	5120	92	440	0.66	190	ISOPLUS247™
IXTX40P50P	-500	-40	0.230	11.5	205	477	0.14	890	PLUS247
IXTN40P50P		-40	0.230	11500	205	477	0.14	890	SOT-227B miniBLOC
IXTK40P50P		-40	0.230	11500	205	477	0.14	890	TO-264
IXTR40P50P		-22	0.260	11500	205	477	0.40	312	ISOPLUS247™
IXTH20P50P		-20	0.450	5120	103	406	0.27	460	TO-247AD
IXTT20P50P		-20	0.450	5120	103	406	0.27	460	TO-268AA
IXTR20P50P		-13	0.490	5120	103	406	0.66	190	ISOPLUS247™
IXTP10P50P		-10	1.000	2670	50	414	0.50	300	TO-220AB
IXTH10P50P		-10	1.000	2670	50	414	0.50	300	TO-247AD
IXTA10P50P		-10	1.000	2670	50	414	0.50	300	TO-263AB
IXTQ10P50P		-10	1.000	2670	50	414	0.50	300	TO-3P
IXTX90P20P	-200	-90	0.044	12000	205	315	0.14	890	PLUS247
IXTN90P20P		-90	0.044	12000	205	315	0.14	890	SOT-227B miniBLOC
IXTK90P20P		-90	0.044	12000	205	315	0.14	890	TO-264
IXTR90P20P		-53	0.048	12000	205	315	0.40	312	ISOPLUS247™
IXTH48P20P		-48	0.085	5400	103	260	0.27	462	TO-247AD
IXTT48P20P		-48	0.085	5400	103	260	0.27	462	TO-268AA
IXTR48P20P		-30	0.093	5400	103	260	0.66	190	ISOPLUS247™
IXTP26P20P		-26	0.170	2740	56	240	0.42	300	TO-220AB
IXTH26P20P		-26	0.170	2740	56	240	0.42	300	TO-247AD
IXTA26P20P		-26	0.170	2740	56	240	0.42	300	TO-263AB
IXTQ26P20P		-26	0.170	2740	56	240	0.42	300	TO-3P
IXTP36P15P	-150	-36	0.110	3100	55	228	0.42	300	TO-220AB
IXTH36P15P		-36	0.110	3100	55	228	0.42	300	TO-247AD
IXTA36P15P		-36	0.110	3100	55	228	0.42	300	TO-263AB
IXTQ36P15P		-36	0.110	3100	55	228	0.42	300	TO-3P
IXTR36P15P		-22	0.120	2950	55	150	1.00	150	ISOPLUS247™
IXTX170P10P	-100	-170	0.012	12600	240	176	0.14	890	PLUS247
IXTN170P10P		-170	0.012	12600	240	176	0.14	890	SOT-227B miniBLOC
IXTK170P10P		-170	0.012	12600	240	176	0.14	890	TO-264
IXTR170P10P		-108	0.013	12600	240	176	0.40	312	ISOPLUS247™
IXTH90P10P		-90	0.025	5800	120	144	0.27	462	TO-247AD
IXTT90P10P		-90	0.025	5800	120	144	0.27	462	TO-268AA
IXTR90P10P		-57	0.027	5800	120	144	0.66	190	ISOPLUS247™
IXTP52P10P		-52	0.050	2845	60	120	0.42	300	TO-220AB
IXTH52P10P		-52	0.050	2845	60	120	0.42	300	TO-247AD
IXTA52P10P		-52	0.050	2845	60	120	0.42	300	TO-263AB
IXTQ52P10P		-52	0.05	2845	60	120	0.42	300	TO-3P

P-Channel TrenchP™ Power MOSFET

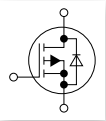

Part Number	V_{DSS}	$I_{D(cont)}$ Chip T_C = 25 °C	$R_{DS(on)}$ T_J = 25 °C	C_{iss} typ.	Q_g typ.	t_{rr} typ. (max)	R_{thJC}	P_D	Package
	V	A	Ω	pF	nC	ns	K/W	W	
IXTK120P20T	-200	-120	0.030	73000	740	-300	0.12	1040	TO-264
IXTX120P20T		-120	0.030	73000	740	-301	0.12	1040	PLUS247
IXTN120P20T		-106	0.030	73000	740	-302	0.15	830	SOT-227B miniBLOC
IXTR120P20T		-90	0.032	73000	740	-303	0.21	595	ISOPLUS247™
IXTH68P20T		-68	0.055	33400	380	245	0.22	568	TO-247AD
IXTT68P20T		-68	0.055	33400	380	245	0.22	568	TO-268AA
IXTR68P20T		-44	0.064	33400	380	245	0.46	270	ISOPLUS247™
IXTA32P20T		-32	0.130	14500	185	190	0.42	300	TO-263AB
IXTP32P20T		-32	0.130	14500	185	190	0.42	300	TO-220AB
IXTH32P20T		-32	0.130	14500	185	190	0.42	300	TO-247AD
IXTQ32P20T		-32	0.130	14500	185	190	0.42	300	TO-3P
IXTP44P15T	-150	-44	0.065	13400	175	140	0.42	298	TO-220AB
IXTH44P15T		-44	0.065	13400	175	140	0.42	298	TO-247AD
IXTA44P15T		-44	0.065	13400	175	140	0.42	298	TO-263AB
IXTQ44P15T		-44	0.065	13400	175	140	0.42	298	TO-3P
IXTP15P15T		-15	0.240	3650	48	116	0.83	150	TO-220AB
IXTY15P15T		-15	0.240	3650	48	116	0.83	150	TO-252AA
IXTA15P15T		-15	0.240	3650	48	116	0.83	150	TO-263AB
IXTP10P15T		-10	0.350	2210	36	120	1.50	83	TO-220AB
IXTY10P15T		-10	0.350	2210	36	120	1.50	83	TO-252AA
IXTA10P15T		-10	0.350	2210	36	120	1.50	83	TO-263AB
IXTK210P10T	-100	-210	0.008	69500	740	-200	0.12	1040	TO-264
IXTN210P10T		-210	0.008	69500	740	-201	0.15	830	SOT-227B miniBLOC
IXTX210P10T		-210	0.008	69500	740	-202	0.12	1040	PLUS247
IXTR210P10T		-195	0.008	69500	740	-203	0.32	390	ISOPLUS247™
IXTH140P10T		-140	0.012	31400	400	130	0.22	568	TO-247AD
IXTT140P10T		-140	0.012	31400	400	130	0.22	568	TO-268AA
IXTR140P10T		-90	0.013	31400	400	130	0.46	270	ISOPLUS247™
IXTP76P10T		-76	0.025	13700	197	70	0.42	298	TO-220AB
IXTH76P10T		-76	0.025	13700	197	70	0.42	298	TO-247AD
IXTA76P10T		-76	0.025	13700	197	70	0.42	298	TO-263AB
IXTP26P10T		-26	0.090	3820	52	70	0.83	150	TO-220AB
IXTY26P10T		-26	0.090	3820	52	70	0.83	150	TO-252AA
IXTA26P10T		-26	0.090	3820	52	70	0.83	150	TO-263AB
IXTP18P10T		-18	0.120	2100	39	62	1.50	83	TO-220AB
IXTY18P10T		-18	0.120	2100	39	62	1.50	83	TO-252AA
IXTA18P10T		-18	0.120	2100	39	62	1.50	83	TO-263AB
IXTP96P085T	-85	-96	0.013	13100	180	55	0.42	298	TO-220AB
IXTH96P085T		-96	0.013	13100	180	55	0.42	298	TO-247AD
IXTA96P085T		-96	0.013	13100	180	55	0.42	298	TO-263AB
IXTP24P085T		-24	0.065	2090	41	40	1.50	83	TO-220AB
IXTA24P085T		-24	0.065	2090	41	40	1.50	83	TO-263AB
IXTP120P065T	-65	-120	0.010	13200	185	53	0.42	298	TO-220AB
IXTH120P065T		-120	0.010	13200	185	53	0.42	298	TO-247AD
IXTA120P065T		-120	0.010	13200	185	53	0.42	298	TO-263AB
IXTP28P065T		-28	0.045	2030	46	31	1.50	83	TO-220AB
IXTA28P065T		-28	0.045	2030	46	31	1.50	83	TO-263AB
IXTP140P05T	-50	-140	0.009	13500	200	53	0.42	298	TO-220AB
IXTH140P05T		-140	0.009	13500	200	53	0.42	298	TO-247AD
IXTA140P05T		-140	0.009	13500	200	53	0.42	298	TO-263AB
IXTP48P05T		-48	0.030	3660	53	30	0.83	150	TO-220AB
IXTY48P05T		-48	0.030	3660	53	30	0.83	150	TO-252AA
IXTA48P05T		-48	0.030	3660	53	30	0.83	150	TO-263AB
IXTP32P05T		-32	0.039	1975	46	26	1.50	83	TO-220AB
IXTY32P05T		-32	0.039	1975	46	26	1.50	83	TO-252AA
IXTA32P05T		-32	0.039	1975	46	26	1.50	83	TO-263AB

©2023 Littelfuse, Inc

X004
TO-252AA

X005a
TO-220AB

X011b
TO-263AB

X014a
TO-247AD

X015a
PLUS247

X016a
ISOPLUS247™

X017a
TO-3P

X019
TO-268AA

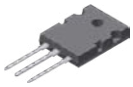

X020a
TO-264

X022c
ISOPLUS264

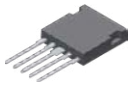

X024a
ISOPLUS i4-PAC™

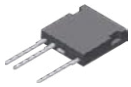

X024c
ISOPLUS i4-PAC™

X027a
SOT-227B miniBLOC

X030a
SMPD-B

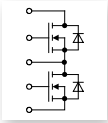

...P...

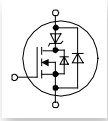

IXKF

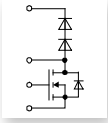

FMD

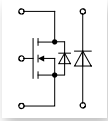

...RK...

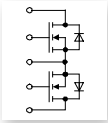

LKK

Superjunction Power MOSFET

Part Number	V_{DSS}	I_{D25} $T_C = 25$ °C	$R_{DS(on)}$ max. $T_J = 25$ °C	Q_g typ.	R_{thJC}	Config.	Package
	V	A	Ω	nC	K/W		
Configurations in i4-PAC™							
FMD15-06KC5[1]	600	15	0.165	40	1.10	boost	ISOPLUS i4-PACTM
Configuration in the ISOPLUS264™ Package							
LKK47-06C5	600	2 × 47	0.045	150	0.45	dual	ISOPLUS264
Configurations in the SMPD Package							
MKE38RK600DFELB[2]	600	50	0.045	150	0.40	buck/boost	SMPD-B
MKE38P600LB[3]	600	50	0.040	150	0.40	phase leg	SMPD-B

1 NFND. Replacement part MXB12R600DPHFC
2 NFND. Replacement part MXB40RK600DFELB
3 NFND. Replacement part MXB40P650LB

Power MOSFET

Littelfuse SiC MOSFETs offer a rewarding alternative to traditional Si-based power transistor devices. The MOSFET device structure enables lower per-cycle Switching losses and improved light-load efficiency when compared to similarly rated IGBTs. Inherent material properties allow the SiC MOSFET to outclass its Si MOSFET counterparts in terms of blocking voltage, specific on resistances, and junction capacitances.

L012b
TO-263 (7)

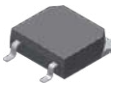

L019a
TO-268AA (HV)

L027a
SOT-227B miniBLOC

L014a
TO-247 AD

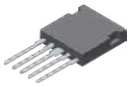

X024a
ISOPLUS i4-PAC™

X030a
SMPD -B

L014d
TO-247-4L

SiC MOSFET

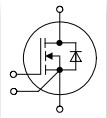

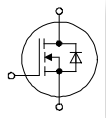

Part Number	V_{DSS}	I_D $T_C = 25$ °C	I_D $T_C = 100$ °C	$R_{DS(on)}$ typ. $T_J = 25$ °C	C_{iss} typ.	Q_g typ.	R_{thJC}	Package
	V	A	A	mΩ	pF	nC	K/W	
LSIC1MO120E0080	1200	39	25	80	1825	95	0.70	TO-247 AD
LSIC1MO120E0120		27	18	120	1125	80	0.90	
LSIC1MO120E0160		22	14	160	870	57	1.00	
LSIC1MO120G0025		90	60	25	4465	250	0.30	TO-247-4L
LSIC1MO120G0040		65	50	40	2825	160	0.42	
LSIC1MO120T0080		39	25	80	1825	95	0.70	TO-263 (7)
LSIC1MO120T0120		27	18	120	1125	80	0.90	
LSIC1MO120T0160		22	14	160	870	57	1.00	
LSIC1MO170E0750	1700	5	3.5	750	200	15	2.30	TO-247 AD
LSIC1MO170T0750		5	3.5	750	200	15	2.30	TO-263 (7)
LSIC1MO170H0750		5	3.5	750	200	15	2.30	TO-268AA (HV)

More Information

SMPD™: An Advanced Isolated Packaging to Fully Exploit the Advantages of SiC MOSFETs

The advanced isolated packages from Littelfuse such as SMPD fill the gap between modules and discretes, offering the performance of power module with the flexibility of discrete devices.
Read on to learn more.

Scan to visit now

Mounting and Cooling Solutions for SMPD Packages

This application note discusses various mounting solutions for Surface Mount Power Device (SMPD) packages.
Read on to learn more.

Scan to visit now

60 W Auxiliary Power Supply

This application note describes the design and performance of 60 W auxiliary power supply with wide input voltage for industrial applications using 1.7 kV 1 ohm SiC MOSFETs from Littelfuse.
Read on to learn more.

Scan to visit now

Optimization of Freewheeling Device Implementation in SiC MOSFETs

This paper discusses the optimization of freewheeling device implementation for SiC MOSFETs in a half-bridge configuration.
Read on to learn more.

Scan to visit now

©2023 Littelfuse, Inc

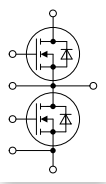
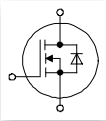
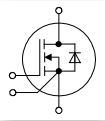

Part Number	V_{DSS}	I_D $T_C = 25$ °C	I_{D80} $T_C = 80$ °C	$R_{DS(on)}$ typ. $T_J = 25$ °C	C_{iss} typ.	Q_g typ.	R_{thJC}	Package
	V	A	A	mΩ	pF	nC	K/W	
IXFN130N90SK [1]	900	136	109	10	4500	68	0.42	SOT-227B miniBLOC
IXFN27N120SK [1]	1200	27	21.5	80	950	62	1.10	SOT-227B miniBLOC
IXFN50N120SIC		47	35	40	1900	100	0.55	SOT-227B miniBLOC
IXFN50N120SK [1]		48	38	40	1895	115	0.60	SOT-227B miniBLOC
IXFN70N120SK [1]		68	55	25	2790	160	0.45	SOT-227B miniBLOC
Phase Leg								
MCL10P1200LB	1200	16	11	160	890	50	2.30	SMPD-B
MCB20P1200LB		22	17.5	80	950	62	1.60	SMPD-B
MCB30P1200LB		37	29.5	40	1895	115	1.00	SMPD-B

1 Kelvin source gate connection;

Buck/Boost Circuits

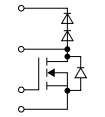

Part Number	Circuit and Technology	V_{DSS} max.	I_{D80} TC = 80 °C	$R_{DS(on)}$ typ.	I_{F80} Boost Diode	Package
		V	A	Ω	A	
MXB12R600DPHFC	X2 Class MOSFET + HiperDynFRED diode	650	13	0.16 (max)	16	ISOPLUS i4-PAC™

Part Number		Circuit and Technology	V_{DSS} max.	I_D TC = 25°C	RDS(on) max.	V_{RRM} Boost Diode	Package
			V	A	Ω	A	
MOSFET							
FMD15-06KC5 [1]	C	Superjunction CP1	600	15	0.165	650	ISOPLUS i4-PAC™
MKE38RK600DFELB [2]	F	Superjunction CP1	650	50	0.045	600	SMPD-B

1 NFND. Replacement part MXB12R600DPHFC
2 NFND. Replacement part MXB40RK600DFELB

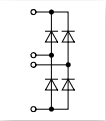

A
1 Phase Bridge

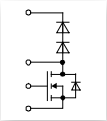

C
MOS + HiPerDyn

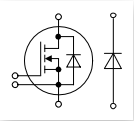

F
buck/boost

1-phase PFC

Part Number		Circuit and Technology	V_{RRM}	I_{DAV} @ T_C	Package
			V	A	
Rectifier					
FBO16-12N [2]	A	Standard	1200	22	ISOPLUS i4-PAC™
FBO40-12N [2]		Standard	1200	40	
DLA100B800LB [3, 4]	A	low VF	800	124	SMPD-B
DLA100B1200LB [3]		low VF	1200	124	

1 Powered by Infineon CoolMOS™ superjunction bare die
2 Recommended in combination with FMD and FID
3 Recommended in combination with MKE, MKG, and MXB
4 AEC-Q-101

Diodes for High Switching Frequencies

Fast Recovery Epitaxial Diodes (HiPerFRED, FRED) and FRD (SONIC)

Power switches (IGBT, MOSFET, BJT, GTO) for applications in electronics are only as good as their associated free wheeling diodes. At increasing switching frequencies, the proper functioning and efficiency of the power switch, aside from conduction losses, is determined by the turn-off behavior of the diode (characterized by Qrr, IRM, and trr Figure 1). With optimized ultra-fast switching diodes, the development engineer has various possibilities: either higher pulse rate or higher current load, or smaller heatsink or more conservative operation due to cooler chips.

The reverse current characteristic following the peak reverse-current IRM is another important property of our diodes. The slope of the decaying reverse current dirr /dt results from design parameters (i.e., technology and diffusion of the diode chips). In a circuit, this current slope, in conjunction with parasitic inductances (e.g., connecting leads), causes over-voltage spikes and high-frequency interference voltages. The higher the dirr /dt ("hard recovery" or "snap-off" behavior), the higher the resulting additional stress for both the diode and the paralleled switch. A slow decay of the reverse current ("soft recovery" behavior) is the most desirable characteristic, and this is designed into all diodes. The wide range of available blocking voltages makes it possible to apply these diodes as output rectifiers in switch-mode power supplies (SMPS) as well as protective and free-wheeling diodes for power switches in inverters.

Silicon Carbide (SiC) Schottky Barrier Diodes

SiC Schottky Barrier Diodes (SBD) offer promising potential for high-efficiency high power density applications due to their superior performance over Si devices. For SiC SBD, the reverse recovery (RR) behavior caused by minority carrier extraction during forced diode turnoffs can be eliminated, as compared with Si P-N junction diodes. The switching losses are ultra-low, and they are independent of di/dt, current level, and temperature. The paralleling of SiC SBD are easy thanks to its positive temperature coefficient. The merged p-n Schottky (MPS) device architecture enhances surge capability and provides low leakage.

Diodes for General Purpose Applications

Rectifier Diodes

Diodes of the DS-series (anode on stud) and of the DSI-series (cathode on stud) are mainly used for rectifying 50 or 60 Hz main currents. Discrete diodes in plastic and metal housings, as well as different diode bridges, are available for standard line voltages from 110 V to 690 V AC.

Avalanche Diodes

Avalanche diodes or surge-voltage-proof rectifier diodes of the series DSA (anode on stud) and DSAI (cathode on stud) differ from standard diodes of the series DS and DSI: the operation in avalanche breakdown above the normal reverse blocking voltage (VRRM) can be tolerated as long as the power is within the specified maximum permissible non-repetitive reverse surge dissipation PRSM at the specified pulse width. For technologically good control of the avalanche breakdown, it is important to ensure homogeneous doping of the middle zone of the silicon chip and suitable junction termination and passivation at the edges where PN-junctions are exposed to the surface (high field strength at the edge). Because of this ruggedness against periodically occurring short-term voltage surges in the blocking direction, the user can frequently do without protective overvoltage networks. In addition, if avalanche diodes are placed in series for high voltage applications, the sharp avalanche breakdown of the blocking characteristic ensures static and dynamic voltage distribution uniformly across each device. Thus, in general, none of the series diodes will be overstressed by reverse voltages that are substantially above the avalanche voltage. All high-voltage rectifier modules manufactured in quantity are assembled with avalanche diodes.

Figure 1:
Current and Voltage During Turn-On and Turn-Off Switching of Fast Diodes

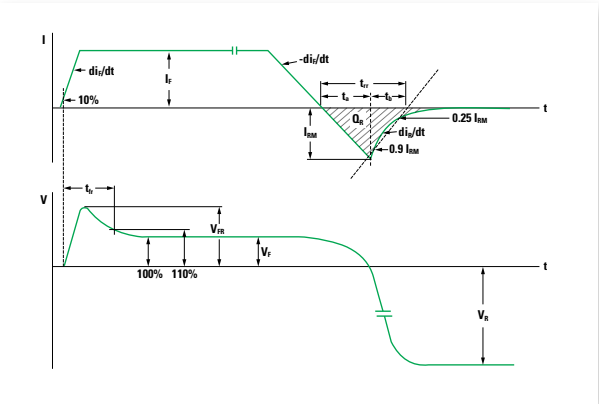

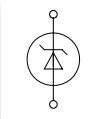
DS...I...

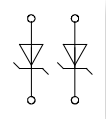
DS...X...

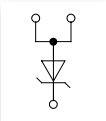
DS...IM...

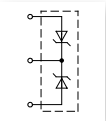
DS...C...

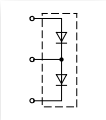
DS...P...

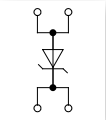
DS...I...NA

©2023 Littelfuse, Inc

X004
TO-252AA

X005a
TO-220AB

X005b
TO-220AC

X007a
TO-220ABFP

X007b
TO-220ACFP

X008a
TO-262AA (I²-PAK)

X011b
TO-263AB

X014a
TO-247AD

X017a
TO-3P

X027a
SOT-227B miniBLOC

Schottky Gen² Diodes

Part Number	V_{RRM}	I_{FAV} @ T_C d = 0.5		V_F @ I_F T_{VJ} = 125 °C		T_{VJM}	R_{thJC}	Package
	V	A	°C	V	A	°C	K/W	
DSB20I15PA	15	20	130	0.39	20	150	1.75	TO-220AC
DSB40C15PB		2 × 20	130	0.39	20	150	1.75	TO-220AB
DSB15IM30UC	30	15	130	0.44	15	150	2.00	TO-252AA
DSB30C30PB		2 × 15	135	0.44	15	150	1.75	TO-220AB
DSB60C30PB		2 × 30	130	0.49	30	150	0.85	TO-220AB
DSB60C30HB		2 × 30	125	0.47	30	150	0.95	TO-247AD
DSB10I45PM	45	10	115	0.52	10	150	4.50	TO-220ACFP
DSA20C45PB		2 × 10	160	0.64	10	175	2.40	TO-220AB
DSA15I45PA		15	155	0.63	15	175	1.75	TO-220AC
DSA15IM45UC		15	150	0.63	15	175	2.00	TO-252AA
DSA15IM45IB		15	155	0.63	15	175	1.75	TO-262AA (I2-PAK)
DSB15IM45IB		15	130	0.60	15	150	1.75	TO-262AA (I2-PAK)
DSA30C45PB		2 × 15	155	0.63	15	175	1.75	TO-220AB
DSA30C45PC		2 × 15	155	0.63	15	175	1.75	TO-263AB
DSB30C45PB		2 × 15	125	0.55	15	150	1.75	TO-220AB
DSA30C45HB		2 × 15	155	0.62	15	175	1.75	TO-247AD
DSB30C45HB		2 × 15	125	0.54	15	150	1.75	TO-247AD
DSA60C45PB		2 × 30	155	0.70	30	175	0.85	TO-220AB
DSB60C45PB		2 × 30	125	0.64	30	150	0.85	TO-220AB
DSA60C45HB		2 × 30	150	0.66	30	175	0.95	TO-247AD
DSB60C45HB		2 × 30	125	0.58	30	150	0.95	TO-247AD
DSA80C45HB		2 × 40	150	0.69	40	175	0.70	TO-247AD
DSB80C45HB		2 × 40	120	0.59	40	150	0.70	TO-247AD
DSA20C60PB	60	2 × 10	155	0.70	10	175	2.40	TO-220AB
DSA20C60PN		2 × 10	140	0.70	10	175	4.80	TO-220ABFP
DSB20C60PN		2 × 10	110	0.62	10	150	4.50	TO-220ABFP
DSA30C60PB		2 × 15	155	0.72	15	175	1.75	TO-220AB
DSB30C60PB		2 × 15	130	0.64	15	150	1.75	TO-220AB
DSA60C60PB		2 × 30	155	0.77	30	175	0.85	TO-220AB
DSB60C60PB		2 × 30	155	0.69	30	150	0.85	TO-220AB
DSA60C60HB		2 × 30	150	0.75	30	175	0.95	TO-247AD
DSB60C60HB		2 × 30	125	0.67	30	150	0.95	TO-247AD
DSA10I100PM	100	10	140	0.71	10	175	4.50	TO-220ACFP
DSA10IM100UC		10	150	0.71	10	175	3.00	TO-252AA
DSA20C100PB		2 × 10	155	0.71	10	175	2.40	TO-220AB
DSA20C100PN		2 × 10	140	0.71	10	175	4.50	TO-220ABFP
DSA30C100PB		2 × 15	155	0.73	15	175	1.75	TO-220AB
DSA30C100PN		2 × 15	120	0.73	15	175	4.25	TO-220ABFP
DSA30C100HB		2 × 15	150	0.72	15	175	1.75	TO-247AD
DSA30C100QB		2 × 15	155	0.72	15	175	1.75	TO-3P
DSA50C100HB		2 × 25	155	0.72	25	175	0.95	TO-247AD
DSA50C100QB		2 × 25	155	0.72	25	175	0.95	TO-3P
DSA30I100PA		30	150	0.78	30	175	0.85	TO-220AC
DSA60C100PB		2 × 30	150	0.78	30	175	0.85	TO-220AB
DSA70C100HB		2 × 35	150	0.74	35	175	0.70	TO-247AD
DSA80C100PB		2 × 40	150	0.80	40	175	0.60	TO-220AB

X004
TO-252AA

X005a
TO-220AB

X005b
TO-220AC

X007a
TO-220ABFP

X008a
TO-262AA (I²-PAK)

X011b
TO-263AB

X016c
ISO247™

X014a
TO-247AD

X014b
TO-247AD

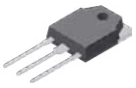
X017a
TO-3P

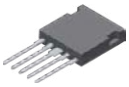
X024a
ISOPLUS i4-PAC™

X027a/b
SOT-227B/UI
miniBLOC

X030a
SMPD -B

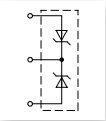
DS...C...

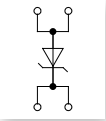
DS...I...NA

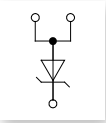
DS...IM...

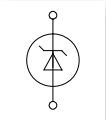
DS...I...

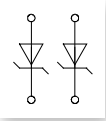
DS...X...

Schottky Gen² Diodes

Part Number	V_{RRM}	I_{FAV} @ T_C d = 0.5		V_F @ I_F T_{VJ} = 125 °C		T_{VJM}	R_{thJC}	Package
	V	A	°C	V	A	°C	K/W	
DSA10C150PB	150	2 × 5	160	0.71	5	175	4.80	TO-220AB
DSA10C150UC		2 × 5	155	0.71	5	175	4.80	TO-252AA
DSA20C150PB		2 × 10	140	0.73	10	175	2.40	TO-220AB
DSA20C150PN		2 × 10	140	0.73	10	175	4.50	TO-220ABFP
DSA15IM150UC		15	150	0.75	15	175	2.00	TO-252AA
DSA30C150PB		2 × 15	155	0.75	15	175	1.75	TO-220AB
DSA30C150PC		2 × 15	155	0.75	15	175	1.75	TO-263AB
DSA30C150HB		2 × 15	150	0.74	15	175	1.75	TO-247AD
DSA50C150HB		2 × 25	155	0.74	25	175	0.95	TO-247AD
DSA30I150PA		30	150	0.80	30	175	0.85	TO-220AC
DSA60C150PB		2 × 30	150	0.80	30	175	0.85	TO-220AB
DSA70C150HB		2 × 35	150	0.77	35	175	0.70	TO-247AD
DSA120C150QB		2 × 60	150	0.85	60	175	0.40	TO-3P
DSA120X150LB		2 × 60	150	0.80	60	175	0.80	SMPD-B
DSA240X150NA		2 × 120	95	0.85	120	150	0.40	SOT-227B miniBLOC
DSA20C200PB	200	2 × 10	155	0.75	10	175	2.40	TO-220AB
DSA15IM200UC		15	150	0.78	15	175	2.00	TO-252AA
DSA30C200IB		2 × 15	155	0.78	15	175	1.75	TO-262AA (I2-PAK)
DSA30C200PB		2 × 15	155	0.78	15	175	1.75	TO-220AB
DSA30C200PC		2 × 15	155	0.78	15	175	1.75	TO-263AB
DSA70C200HB		2 × 35	150	0.79	35	175	0.70	TO-247AD
DSA90C200HB		2 × 45	145	0.86	45	175	0.55	TO-247AD
DSA120X200LB		2 × 60	150	0.87	60	175	0.80	SMPD-B
DSA240X200LB		2 × 120	150	0.87	120	175	0.40	SMPD-B
DSA240X200NA		2 × 120	90	0.87	120	150	0.40	SOT-227B miniBLOC

©2023 Littelfuse, Inc

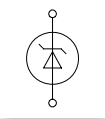

DSS...

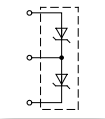

DSSS...

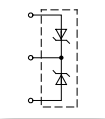

DSSK...

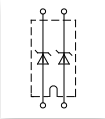

DSS 2x...

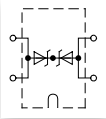

DSS 2x...

Schottky Diodes

Part Number	V_{RRM}	I_{FAV} @ T_C d = 0.5		V_F @ I_F T_{VJ} = 125 °C		T_{VJM}	R_{thJC}	Package
	V	A	°C	V	A	°C	K/W	
DSS40-0008D	8	40	130	0.28	40	150	0.80	TO-247AD
DSSK80-0008D		2 × 40	130	0.28	40	150	0.80	TO-247AD
DSS20-0015B	15	20	135	0.33	20	150	1.40	TO-220AC
DSSK40-0015B		2 × 20	135	0.32	20	150	1.40	TO-247AD
DSSK70-0015B		2 × 35	130	0.35	35	150	1.10	TO-247AD
DSS6-0025BS	25	6	140	0.35	6	150	3.00	TO-252AA
DSS25-0025B		25	125	0.45	25	150	1.40	TO-220AC
DSSK18-0025BS		2 × 10	140	0.37	10	150	1.70	TO-263AB
DSSK38-0025B		2 × 20	130	0.40	20	150	1.40	TO-220AB
DSSK38-0025BS		2 × 20	130	0.40	20	150	1.40	TO-263AB
DSSK50-0025B		2 × 25	125	0.43	25	150	1.40	TO-247AD
DSSK80-0025B		2 × 40	130	0.39	40	150	0.80	TO-247AD
DSSK48-003BS	30	2 × 25	130	0.40	20	150	1.20	TO-263AB
DSSK70-003B		2 × 35	125	0.39	35	150	1.10	TO-247AD
DSSK80-003B		2 × 40	130	0.39	40	150	0.80	TO-247AD
DSS6-0045AS	45	6	165	0.53	6	175	3.00	TO-252AA
DSS10-0045B		10	135	0.50	10	150	1.70	TO-220AC
DSS16-0045A		16	160	0.60	16	175	1.40	TO-220AC
DSS16-0045AS		16	160	0.60	16	175	1.40	TO-263AB
DSS25-0045A		25	155	0.64	25	175	1.10	TO-220AC
DSS60-0045B		60	105	0.57	60	150	0.80	TO-247AD
DSSK20-0045B		2 × 10	135	0.46	10	150	1.70	TO-220AB
DSSK28-0045BS		2 × 15	135	0.43	15	150	1.40	TO-263AB
DSSK60-0045A		2 × 30	150	0.58	30	175	1.10	TO-247AD
DSSK60-0045B		2 × 30	125	0.45	30	150	1.10	TO-247AD
DSSK80-0045B		2 × 40	125	0.46	40	150	0.80	TO-247AD
DSS2x61-0045A		2 × 60	110	0.65	60	150	0.80	SOT-227B miniBLOC
DSS2x81-0045B		2 × 80	85	0.63	80	150	0.80	SOT-227B miniBLOC
DSS2x121-0045B		2 × 120	100	0.59	120	150	0.40	SOT-227B miniBLOC
DSS2x160-0045A[1]		2 × 160	90	0.72	160	150	0.40	SOT-227UI miniBLOC
DSS10-006A	60	10	160	0.65	10	175	1.70	TO-220AC
DSSK28-006BS		2 × 15	135	0.52	15	150	1.40	TO-263AB
DSSK40-006B		2 × 20	135	0.46	20	150	1.10	TO-247AD
DSSK80-006B		2 × 40	120	0.51	40	150	0.80	TO-247AD
DSSK40-008B	80	2 × 20	130	0.52	20	150	1.10	TO-247AD
DSSK70-008A		2 × 35	150	0.64	35	175	0.80	TO-247AD
DSS2x111-008A		2 × 110	105	0.72	100	150	0.40	SOT-227B miniBLOC
DSS10-01A	100	10	160	0.66	10	175	1.70	TO-220AC
DSS10-01AS		10	160	0.75	10	175	1.70	TO-263AB
DSS16-01A		16	155	0.65	16	175	1.40	TO-220AC
DSS16-01AS		16	155	0.65	16	175	1.40	TO-263AB
DSSK16-01A		2 × 8	165	0.63	8	175	1.70	TO-220AB
DSSK16-01AS		2 × 8	165	0.63	8	175	1.70	TO-263AB
DSSK28-01AS		2 × 15	160	0.64	15	175	1.40	TO-263AB
DSSK30-01A		2 × 15	160	0.63	15	175	1.40	TO-247AD
DSSK50-01A		2 × 25	155	0.64	25	175	1.10	TO-247AD
DSS2x41-01A		2 × 40	110	0.70	40	150	1.10	SOT-227B miniBLOC
DSS2x61-01A		2 × 60	105	0.74	60	150	0.80	SOT-227B miniBLOC
DSS2x160-01A[1]		2 × 160	80	0.81	160	150	0.40	SOT-227UI miniBLOC

1 Non isolated base plate

X004
TO-252AA

X007b
TO-220ABCP

X014b
TO-247AD

X016c
ISO247™

X005a
TO-220AB

X010b
ISOPLUS220™

TO-277B

X017a
TO-3P

X005b
TO-220AC

X011b
TO-263AB

X016a
ISOPLUS247™

X024b
ISOPLUS i4-PAC™

X007a
TO-220ABFP

X014a
TO-247AD

X016b
ISOPLUS247™

X027a
SOT-227B miniBLOC

DPAK

D2PAK

ITO-220AB

P600

PDFNWB5x6-8L

Schottky Diodes

DSS...

DSSK...

DSS 2x...

Part Number	V_{RRM}	I_{FAV} @ T_C d = 0.5		V_F @ I_F T_{VJ} = 125 °C		T_{VJM}	R_{thJC}	Package
	V	A	°C	V	A	°C	K/W	
DSS6-015AS	150	6	165	0.65	6	175	3.0	TO-252AA
DSSK20-015A		2 × 10	165	0.65	10	175	1.4	TO-220AB
DSSK50-015A		2 × 25	150	0.68	25	175	1.1	TO-247AD
DSSK60-015A		2 × 30	155	0.66	30	175	0.8	TO-247AD
DSS2X101-015A	150	2 × 100	110	0.77	100	150	0.4	SOT-227B miniBLOC
DSSK10-018A	180	2 × 5	165	0.60	5	175	1.7	X005a
DSSK30-018A		2 × 15	150	0.66	15	175	1.7	TO-220AB
DSSK60-02A	200	2 × 30	155	0.70	30	175	0.8	TO-247AD
DSS2X101-02A		2 × 100	105	0.84	100	150	0.4	SOT-227B miniBLOC

Traditional Schottky (MBR)

MBRF...

MBR...

MBR6...

MBRB...

MBR1...

Part Number	V_{RRM}	I_{FAV} @ T_C d = 0.5		V_F @ I_F T_J = 125 °C		T_{JM}	R_{thJC}	Package
	V	A	°C	V	A	°C	K/W	
MBR1045	45	10	115	–	–	150	2.0	TO-220AC
MBRF2045CT		2 x 10	105	0.72	20	150	5.0	ITO-220AB
MBR6045WT		2 x 30	135	0.55	30	150	1.0	TO-247AD
MBRB1060CT	60	2 x 5	105	0.65	5	150	2.0	D2PAK
MBRF1060CTL		2 x 5	75	–	–	125	3.5	ITO-220AB
MBR1060CTL		2 x 5	100	–	–	125	2.0	TO-220AB
MBRB2060CT		2 x 10	105	–	–	150	2.3	D2PAK
MBRF2060CT		2 x 10	105	–	–	150	2.3	ITO-220AB
MBR2060CT		2 x 10	100	0.70	10	150	2.3	TO-220AB
MBRF3060CT		2 x 15	95	0.67	15	150	3.0	ITO-220AB
MBRB10100CT	100	2 x 5	105	0.75	5	150	6.0	D2PAK
MBRD10100CT		2 x 5	105	0.75	5	150	6.0	DPAK
MBRF10100CTL		2 x 5	135	0.75	5	150	4.5	ITO-220AB
MBRF10100CTR		2 x 5	105	0.75	5	150	4.5	ITO-220AB
MBR10100CT		2 x 5	100	0.75	5	150	2.0	TO-220AB
MBRB20100CT		2 x 10	105	0.80	10	150	2.0	D2PAK
MBRF20100CTP		2 x 10	105	0.80	10	150	3.5	ITO-220AB
MBR20100CTP		2 x 10	105	0.80	10	150	3.5	TO-220AB
MBRF30100CTP		2 x 15	133	0.70	15	150	2.0	ITO-220AB
MBR40100WT		2 x 20	135	0.74	20	150	2.0	TO-247AD

©2023 Littelfuse, Inc

Traditional Schottky (MBR)

Part Number	V_{RRM}	I_{FAV} @ T_C d = 0.5		V_F @ I_F T_J = 125 °C		T_{JM}	R_{thJC}	Package
	V	A	°C	V	A	°C	K/W	
MBRD10150CT	150	2 x 5	105	0.80	5	150	4.5	DPAK
MBRF10150CTL		2 x 5	100	0.73	5	150	4.5	ITO-220AB
MBR10150CT		2 x 5	105	0.73	5	150	4.5	TO-220AB
MBR20150CT		2 x 10	125	0.83	10	175	1.5	TO-220AB
MBRF20150CT		2 x 10	100	0.80	10	175	3.5	ITO-220AB
MBRF30150CT		2 x 15	133	0.80	15	150	2.0	ITO-220AB
MBRD10200CT	200	2 x 5	105	0.74	5	150	3.5	DPAK
MBRF10200CT		2 x 5	105	0.78	5	150	4.5	ITO-220AB
MBR10200CT		2 x 5	105	0.78	5	150	3.5	TO-220AB
MBRF20200CT		2 x 10	105	0.85	10	175	4.5	ITO-220AB
MBRF20200CTR		2 x 10	105	0.85	10	175	4.5	ITO-220AB
MBRF30200CT		2 x 15	109	0.75	15	150	3.3	ITO-220AB

Ultralow Trench Schottky (DST)

DSTB...

DSTF...

DST....A

DST....D

DSTD

Part Number	V_{RRM}	I_{FAV} @ T_C d = 0.5		V_F @ I_F T_J = 125 °C		T_{JM}	R_{thJC}	Package
	V	A	°C	V	A	°C	K/W	
DST2045AX	45	20	25[b]	0.50	20	150	–	P600
DSTB2045C		2 x 10	80	0.42	10	150	3.0	D2PAK
DSTF2045C		2 x 10	80	0.52	10	150	6.0	ITO-220AB
DST2045C		2 x 10	80	0.52	10	150	3.0	TO-220AB
DSTF3045C		2 x 15	90	0.45[a]	15	150	5.0	ITO-220AB
DSTF4045C		2 x 20	90	0.51[a]	20	150	5.0	ITO-220AB
DSTF2050C	50	2 x 10	110	0.44[a]	10	150	6.0	ITO-220AB
DSTF4050C		2 x 20	90	0.55	20	150	5.0	ITO-220AB
DST2060DJF	60	20	80	0.70	20	150	2.6	PDFNWB5×6-8L
DST2060C		2 x 10	125	0.59	10	150	3.0	TO-220AB
DSTF2060C		2 x 10	85	0.59	10	150	6.0	ITO-220AB
DST3060DJF		30	80	0.72	30	150	2.6	PDFNWB5×6-8L
DST3060LC		2 x 15	105	0.44[a]	15	125	5.0	TO-220AB
DSTF3060C		2 x 15	60	0.65	15	150	6.0	ITO-220AB
DSTF3060CR		2 x 15	60	0.65	15	150	6.0	ITO-220AB
DSTF4060C		2 x 20	85	0.57	20	150	5.0	ITO-220AB
DSTF2080C	80	2 x 10	85	0.70	10	150	6.0	ITO-220AB
DST2080C		2 x 10	125	0.70	10	150	3.0	TO-220AB
DSTF3080C		2 x 15	60	0.70	15	150	6.0	ITO-220AB
DST3080C		2 x 15	100	0.70	15	150	2.5	TO-220AB
DSTF20100C	100	2 x 10	100	0.70	10	150	5.5	ITO-220AB
DSTF30100C		2 x 15	95	0.70	15	150	5.5	ITO-220AB
DSTF30100S		30	70	0.78	30	150	4.0	ITO-220AB
DST20100C		2 x 10	120	0.70	10	150	2.8	TO-220AB
DST30100C		2 x 15	115	0.70	15	150	2.5	TO-220AB
DSTF40100C		2 x 20	85	0.70	20	150	4.0	ITO-220AB
DST40100C		2 x 20	115	0.70	20	150	2.0	TO-220AB
DSTB60100C		2 x 30	105	0.80	30	150	2.0	D2PAK
DSTF60100C		2 x 30	105	0.80	30	150	5.0	ITO-220AB
DSTF20120C	120	2 x 10	74	0.72	10	150	5.0	ITO-220AB
DSTF20120CR		2 x 10	74	0.72	10	150	5.0	ITO-220AB
DSTF30120C		2 x 15	80	0.76	15	150	4.5	ITO-220AB
DSTF30120CR		2 x 15	80	0.76	15	150	4.5	ITO-220AB
DSTF40120C		2 x 20	74	0.76	20	150	4.0	ITO-220AB
DSTF20150CR	150	2 x 10	80	0.80	10	150	5.0	ITO-220AB
DST20150C		2 x 10	105	0.80	10	150	2.8	TO-220AB
DSTF30150C		2 x 15	50	0.79	15	150	4.5	ITO-220AB
DSTF40150C		2 x 20	70	0.82	20	150	4.0	ITO-220AB
DST5200	200	5	100	0.73	5	150	3.5	TO-220AC
DSTD5200		5	100	0.73	5	150	2.4	DPAK
DSTF10200C		2 x 5	90	0.73	5	150	7.0	ITO-220AB
DSTB30200C		2 x 15	100	0.72	15	150	2.0	D2PAK

a: Typical value
b: T_A, Ambient temperature

Ultralow Trench Schottky (DST, TO-277B)

Part Number	V_{RRM}	I_{FAV} @ T_L d = 0.5		V_F @ I_F T_J = 125 °C		T_{JM}	R_{thJL}	Package
	V	A	°C	V	A	°C	K/W	
DST1040S-A	40	10	125	0.50	10	150	3.5	TO-277B
DST1040S		10	125	0.41[a]	10	150	3.5	TO-277B
DST1045S-A	45	10	125	0.50	10	150	3.5	TO-277B
DST1045S		10	125	0.50	10	150	3.5	TO-277B
DST1545S		15	125	0.51	15	150	3.5	TO-277B
DST1050S-A	50	10	125	0.49	10	150	3.5	TO-277B
DST1050S		10	125	0.49	10	150	3.5	TO-277B
DST1550S		15	125	0.50	15	150	3.5	TO-277B
DST2050S		20	125	0.60	20	150	3.5	TO-277B
DST560S-A	60	5	125	0.60	5	150	4.0	TO-277B
DST560S		5	125	0.60	5	150	4.0	TO-277B
DST860S-A		8	125	0.55	8	150	4.0	TO-277B
DST860S		8	125	0.55	8	150	4.0	TO-277B
DST580S-A	80	5	125	0.66	5	150	4.0	TO-277B
DST580S		5	125	0.66	5	150	4.0	TO-277B
DST2080S		20	85[b]	0.65	20	150	–	TO-277B
DST5100S-A	100	5	125	0.70	5	150	4.0	TO-277B
DST5100S		5	125	0.70	5	150	4.0	TO-277B
DST8100S-A		8	125	0.62	8	150	4.0	TO-277B
DST8100S		8	125	0.62	8	150	4.0	TO-277B
DST10100S-A		10	125	0.65	10	150	3.5	TO-277B
DST10100S		10	125	0.65	10	150	3.5	TO-277B
DST12100S		12	125	0.64	12	150	3.5	TO-277B

a: Typical value
b: T_A, Ambient temperature

HiPerDyn™ FRED

Series connected diodes for high switching frequencies; packages isolated (2500 V_{RMS})

DSEP 2x...-...C

DPH...IS...
DSEP/DSS...-...C

Part Number	V_{RRM}	I_{FAV} d = 0.5	T_C	V_F @ T_{VJ} $I_F = I_{FAV}$		t_{rr} typ. T_{VJ} = 25 °C	I_{RM} typ.	@ -di/dt	T_{VJM}	R_{thJC}	Package
	V	A	°C	V	°C	ns	A	A/µs	°C	K/W	
DSS17-06CR	600	17	95	2.71	125	45	2.0	100	175	1.40	ISOPLLUS247™
DPH30IS600HI		30	140	1.89	150	35	3.0	200	175	0.55	ISOPLLUS247™
DSEP15-12CR	1200	15	135	2.67	150	15	10.0	600	175	1.00	ISOPLLUS247™
DSEP30-12CR		30	120	3.18	150	15	5.5	600	175	0.60	ISOPLLUS247™
DSEP2x25-12C	1200	2 × 25	90	2.95	150	15	5.5	600	150	0.60	SOT-227B miniBLOC
DPJ50XS1800NA	1800	2 × 25	90	4.33	150	15	4.0	600	150	0.40	SOT-227B miniBLOC

Dual Ultrafast Diodes

Series connected diodes for high switching frequencies with middle connection; packages isolated (2500 V_{RMS})

DHH/DSEE
DPF/G... P..

Part Number	V_{RRM}	I_{FAV} d = 0.5	T_C	V_F @ T_{VJ} $I_F = I_{FAV}$		t_{rr} typ. T_{VJ} = 25 °C	I_{RM} typ.	@ -di/dt	T_{VJM}	R_{thJC}	Package
	V	A	°C	V	°C	ns	A	A/µs	°C	K/W	
DPG30P300PJ	2 × 300	30	135	0.99	150	35	3	200	175	1.05	ISOPLUS220TM
DPG10P400PJ	2 × 400	10	145	1.03	150	45	4	200	175	2.5	ISOPLUS220TM
DPG30P400PJ	2 × 400	30	135	1.05	30	45	4	200	175	1.05	ISOPLUS220TM
DSEE15-12CC	2 × 600	15	100	1.50	125	35	4	100	175	1.6	ISOPLUS220TM
DSEE29-12CC	2 × 600	30	90	1.75	125	30	4	100	175	0.9	ISOPLUS220TM
DPF30P600HR	2 × 600	30	130	1.27	150	35	17	600	175	0.9	ISO247TM
DSEE30-12A	2 × 600	30	90	1.78	125	30	4	100	175	0.9	TO-247AD
DSEE55-24N1F	2 × 1200	60	110	1.56	150	75	35	600	175	0.6	ISOPLUS i4-PACTM
DHH55-36N1F	2 × 1800	60	50	2.06	125	230	60	800	150	0.6	ISOPLUS i4-PACTM

©2023 Littelfuse, Inc

HiPerFRED 2™ Diodes

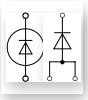
DPF/G/H...I*...

DPG...P...

DPF/G...C...

DPF...XA...

DPF...X...

DPF...C...

Part Number	V_{RRM}	I_{FAV} d = 0.5	@ T_C	I_{FSM} 10 ms 45 °C	V_F	@ I_F	t_{rr}	I_{RM}	-di/dt	T_{VJM}	R_{thJC}	Package
					T_{VJ} = 150 °C		typ. T_{VJ} = 25 °C					
	V	A	°C	A	V	°C	ns	A	A/µs	°C	K/W	
DPG10I200PA	200	10	145	140	0.98	10	35	3	200	175	2.30	TO-220AC
DPG10I200PM		10	125	140	0.98	10	35	3	200	175	4.40	TO-220ACFP
DPG20C200PB	200	2 × 10	145	140	0.98	10	35	3	200	175	2.30	TO-220AB
DPG20C200PN		2 × 10	125	140	0.98	10	35	3	200	175	4.40	TO-220ABFP
DPG15I200PA	200	15	140	240	1.01	15	35	3	200	175	1.70	TO-220AC
DPG30C200PB		2 × 15	140	240	1.01	15	35	3	200	175	1.70	TO-220AB
DPG30C200PC		2 × 15	140	240	1.01	15	35	3	130	175	1.70	TO-263AB
DPG30C200HB	200	2 × 15	140	240	1.00	15	35	3	200	175	1.70	TO-247AD
DPF60C200HB		2 × 30	130	400	0.98	30	35	4	200	175	0.95	TO-247AD
DPF60C200HJ	200	2 × 30	130	560	0.88	30	35	4	200	175	1.05	ISOPLUS247™
DPG60C200HB		2 × 30	135	360	1.06	30	35	3	200	175	0.95	TO-247AD
DPG60C200QB		2 × 30	135	360	1.06	30	35	3	200	175	0.95	TO-3P
DPF80C200HB	200	2 × 40	140	560	0.95	40	35	4	200	175	0.70	TO-247AD
DPF100C1200HB	1200	2 x 50	125	400	4.41	50	60	18	400	175	0.75	TO-247AD
DPF60I200HA	200	60	135	650	0.98	60	35	4	200	175	0.55	TO-247AD
DPF240X200NA		2 × 120	120	1800	0.90	120	35	4	200	175	0.45	SOT-227B miniBLOC
DPG10I300PA	300	10	145	140	0.98	10	35	3	200	175	2.30	TO-220AC
DPG10IM300UC		10	150	140	0.98	10	35	3	200	175	2.30	TO-252AA
DPG20C300PB	300	2 × 10	145	140	0.98	10	35	3	200	175	2.30	TO-220AB
DPG20C300PN		2 × 10	125	140	0.98	10	35	3	200	175	4.40	TO-220ABFP
DPG15I300PA	300	15	140	240	1.01	15	35	3	200	175	1.70	TO-220AC
DPG30C300PB		2 × 15	140	240	1.01	15	35	3	200	175	1.70	TO-220AB
DPG30C300PC	300	2 × 15	140	240	1.01	15	35	3	200	175	1.70	TO-263AB
DPG30C300HB		2 × 15	140	240	1.00	15	35	3	200	175	1.70	TO-247AD
DPF30I300PA	300	30	145	390	0.98	30	55	6	200	175	0.85	TO-220AC
DPG30I300HA		30	135	360	1.06	30	35	3	200	175	0.95	TO-247AD
DPG30I300PA	300	30	140	360	1.08	30	35	3	200	175	0.85	TO-220AC
DPG30IM300PC		30	140	360	1.08	30	35	3	200	175	0.85	TO-263AB
DPG30P300PJ	2 × 300	30	135	450	0.99	30	35	3	200	175	1.05	ISOPLUS220™
DPF60C300HB	300	2 × 30	140	400	0.97	30	55	6	200	175	0.95	TO-247AD
DPG60C300HB		2 × 30	135	360	1.06	30	35	3	200	175	0.95	TO-247AD
DPG60C300HJ	300	2 × 30	135	450	0.96	30	35	3	200	175	1.05	ISOPLUS247™
DPG60C300PC		2 × 30	140	360	1.08	30	35	3	200	175	0.85	TO-263AB
DPG60C300QB	300	2 × 30	135	360	1.06	30	35	3	200	175	0.95	TO-3P
DPG80C300HB	300	2 × 40	135	450	1.07	40	35	3	200	175	0.70	TO-247AD
DPG60I300HA		60	125	450	1.10	60	35	3.5	200	175	0.55	TO-247AD
DPG60IM300PC	300	60	135	450	1.14	60	35	3.5	200	175	0.45	TO-263AB
DPG120C300QB		2 × 60	125	450	1.10	60	35	3.5	200	175	0.55	TO-3P
DPG10I400PA	400	10	145	150	1.03	10	45	4	200	175	2.30	TO-220AC
DPG10I400PM		10	120	150	1.03	10	45	4	200	175	4.40	TO-220ACFP
DPG10P400PJ	2 × 400	10	145	130	1.03	10	45	4	200	175	2.50	ISOPLUS220™
DPG20C400PB	400	2 × 10	145	150	1.03	10	45	4	200	175	2.30	TO-220AB
DPG20C400PC		2 × 10	145	150	1.03	10	45	4	200	175	2.30	TO-263AB
DPG20C400PN	400	2 × 10	120	150	1.03	10	45	4	200	175	4.40	TO-220ABFP
DPG15I400PM		15	90	190	1.14	15	45	4	200	175	4.20	TO-220ACFP
DPG30C400PB		2 × 15	140	190	1.14	15	45	4	200	175	1.70	TO-220AB
DPG30C400HB	400	2 × 15	140	190	1.13	15	45	4	200	175	1.70	TO-247AD
DPG30I400HA		30	135	360	1.13	30	45	4	200	175	0.95	TO-247AD
DPG30IM400PC		30	145	300	1.16	30	45	4	200	175	0.85	TO-263AB
DPG30P400PJ	2 × 400	10	135	400	1.05	30	45	4	200	175	1.05	ISOPLUS220™
DPG60C400HB	400	2 × 30	135	360	1.13	30	45	4	200	175	0.95	TO-247AD
DPG60C400QB		2 × 30	135	360	1.13	30	45	4	200	175	0.95	TO-3P
DPG80C400HB	400	2 × 40	135	400	1.14	40	45	4	200	175	0.70	TO-247AD
DPG60I400HA		60	120	450	1.22	60	45	4	200	175	0.55	TO-247AD
DPF60IM400HB		60	130	600	1.09	60	60	6	200	175	0.55	TO-247AD
DPG60IM400QB	400	60	120	450	1.22	60	45	4	200	175	0.55	TO-3P
DPF240X400NA		2 × 120	120	1100	0.95	120	60	6	200	175	0.45	SOT-227B miniBLOC
DPH30IS600HI	600	30	140	450	1.89	30	35	3	200	175	0.55	ISOPLUS247™

HiPerFRED™ Diodes

DSEP...

DSEC...

DSEP 2x...0-...

DSEP 2x...1-...

DSEC

Part Number	V_{RRM}	I_{FAV}	@ T_C	I_{FSM}	V_F	@ I_F	t_{rr}	I_{RM}	-di/dt typ.	T_{VJM}	R_{thJC}	Package
		d = 0.5		10 ms 45 °C	T_{VJ} = 150 °C		typ. T_{VJ} = 25 °C					
	V	A	°C		V	°C	ns	A	A/µs	°C	K/W	
DSEP40-03AS	300	40	125	340	1.18	40	35	3.5	200	175	0.85	TO-263AB
DSEP6-06AS	600	6	150	40	1.34	6	20	3.5	100	175	2.80	TO-252AA
DSEP6-06BS		6	140	40	1.77	6	15	2.0	100	175	2.80	TO-252AA
DSEP8-06A	600	10	145	50	1.42	10	35	3.5	100	175	2.50	TO-220AC
DSEP8-06B		10	130	50	1.85	10	30	2.0	100	175	2.50	TO-220AC
DSEP15-06A		15	140	110	1.35	15	35	4.0	100	175	1.60	TO-220AC
DSEP15-06AS	600	15	140	110	1.35	15	35	4.0	100	175	1.60	TO-263AB
DSEP15-06B		15	130	110	1.59	15	25	2.0	100	175	1.60	TO-220AC
DSEP15-06BS	600	15	130	110	1.59	15	25	2.0	100	175	1.60	TO-263AB
DSEP29-06A		30	135	250	1.26	30	35	5.5	100	175	0.90	TO-220AC
DSEP29-06AS	600	30	135	250	1.26	30	35	5.5	100	175	0.90	TO-263AB
DSEP29-06B		30	120	250	1.63	30	30	3.0	100	175	0.90	TO-220AC
DPG30I600PM		15	95	250	1.63	30	25	4.5	200	175	3.50	TO-220ACFP
DSEP30-06A	600	30	135	250	1.25	30	35	5.5	100	175	0.90	TO-247AD
DSEP30-06B		30	120	250	1.61	30	30	3.0	100	175	0.90	TO-247AD
DSEP30-06BR	600	30	100	250	1.61	30	30	3.0	100	175	1.10	ISOPLUS247™
DSEP60-06A		60	110	600	1.39	60	35	5.5	100	175	0.65	TO-247AD
DSEP60-06AT	600	60	110	600	1.39	60	35	5.5	100	175	0.65	TO-268AA
DSEP75-06AR		75	115	1000	1.38	75	35	6.5	200	175	0.50	ISOPLUS247™
DSEP8-12A	1200	10	130	40	1.96	10	40	4.0	100	175	2.50	TO-220AC
DSEP12-12A		15	130	90	1.87	15	40	4.5	100	175	1.60	TO-220AC
DSEP12-12AZ	1200	15	130	90	1.87	15	40	4.5	100	175	1.60	TO-263ABHV
DSEP12-12B		15	130	90	2.06	15	35	3.0	100	175	1.60	TO-220AC
DSEP12-12BZ		15	130	90	2.06	15	35	3.0	100	175	1.60	TO-263ABHV
DSEP29-12A	1200	30	120	200	1.81	30	40	8.5	100	175	0.90	TO-220AC
DSEP29-12B		30	100	200	2.31	30	35	5.0	100	175	0.90	TO-220AC
DSEP30-12A	1200	30	115	200	1.79	30	40	8.5	100	175	0.90	TO-247AD
DSEP30-12B		30	100	200	2.30	30	35	5.0	100	175	0.90	TO-247AD
DSEP30-12AR	1200	30	100	200	1.79	30	40	8.5	100	175	1.10	ISOPLUS247™
DSEP60-12A		60	85	500	1.81	60	40	8.5	100	175	0.65	TO-247AD
DSEP60-12B		60	110	500	2.20	60	35	-	100	175	0.45	TO-247AD
DSEP60-12AR	1200	60	60	500	1.81	60	40	8.5	100	175	0.80	ISOPLUS247™
DSEP60-12AZ		60	115	500	1.81	60	40	8.5	100	175	0.45	TO-268AAHV
DSEP90-12AZ		90	105	800	1.79	90	40	8.5	100	175	0.35	TO-268AAHV
DSEC16-06A	600	2 × 10	145	50	1.42	10	35	3.5	100	175	2.50	TO-220AB
DSEC16-06AC		2 × 8	85	50	1.20	10	35	3.5	100	175	3.00	ISOPLUS220™
DSEC29-06AC		2 × 15	140	110	1.34	15	35	4.0	100	175	1.60	ISOPLUS220™
DSEC30-06A	600	2 × 15	140	110	1.34	15	35	4.0	100	175	1.60	TO-247AD
DSEC30-06B		2 × 15	130	110	1.58	15	25	2.0	100	175	1.60	TO-247AD
DSEC59-06BC	600	2 × 30	105	200	1.56	30	30	4.0	100	175	1.10	ISOPLUS220™
DSEC60-06A		2 × 30	135	250	1.25	30	35	5.5	100	175	0.90	TO-247AD
DSEC60-06B		2 × 30	120	250	1.61	30	30	3.0	100	175	0.90	TO-247AD
DSEC16-12A	1200	2 × 10	130	40	1.96	10	40	4.0	100	175	2.50	TO-220AB
DSEC16-12AS		2 × 10	130	40	1.96	10	40	4.0	100	175	2.50	TO-263AB
DSEC30-12A	1200	2 × 15	115	90	1.86	15	40	4.5	100	175	1.60	TO-247AD
DSEC60-12A		2 × 30	115	200	1.79	30	40	8.5	100	175	0.90	TO-247AD
DSEC120-12AK		2 × 60	85	500	1.81	60	40	7.0	100	175	0.65	TO-264
DSEP2X31-03A	300	2 × 30	110	300	0.90	30	30	4.5	100	150	1.15	SOT-227B miniBLOC
DSEP2X61-03A		2 × 60	75	600	1.26	60	30	4.0	100	150	0.85	SOT-227B miniBLOC
DSEP2X91-03A		2 × 90	70	1000	1.10	90	30	4.5	100	150	0.60	SOT-227B miniBLOC
DSEP2X31-06A	600	2 × 30	95	250	1.23	30	35	5.5	100	150	1.15	SOT-227B miniBLOC
DSEP2X31-06B		2 × 30	75	250	1.59	30	30	3.0	100	150	1.15	SOT-227B miniBLOC
DSEP2X61-06A	600	2 × 60	65	600	1.48	60	35	5.5	100	150	0.85	SOT-227B miniBLOC
DSEP2X91-06A		2 × 90	55	1000	1.39	90	35	8.0	100	150	0.60	SOT-227B miniBLOC
DSEP2X31-12A	1200	2 × 30	70	200	1.77	30	40	8.5	100	150	1.15	SOT-227B miniBLOC
DSEP2X60-12A		2 × 60	80	800	1.52	60	40	8.0	100	150	0.60	SOT-227B miniBLOC
DSEP2X61-12A	1200	2 × 60	80	800	1.52	60	40	8.0	100	150	0.60	SOT-227B miniBLOC
DSEP2X101-04A	400	2 × 100	45	1000	1.22	125	30	5.5	100	150	0.60	SOT-227B miniBLOC
DSEC240-04A		2 × 120	75	2000	1.00	120	30	5.5	100	150	0.45	SOT-227UI miniBLOC
DSEC240-06A	600	2 × 120	75	2000	1.26	120	35	8.0	100	150	0.40	SOT-227UI miniBLOC

©2023 Littelfuse, Inc

X004
TO-252AA

X005a
TO-220AB

X005b
TO-220AC

X007b
TO-220ABCP

X010b
ISOPLUS220™

X011b
TO-263AB

X011c
TO-263ABHV

X014a
TO-247AD

X014b
TO-247AD

X016a
ISOPLUS247™

X016b
ISOPLUS247™

X017a
TO-3P

X019
TO-268AA

X019a
TO-268AAHV

X020a
TO-264

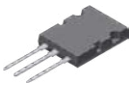
X021a
PLUS264

X024b
ISOPLUS i4-PAC™

X024e
ISOPLUS i4-PAC™

X027a/b
SOT-227B/UI
miniBLOC

SONIC-FRDTM Diodes

- Ultrasoft and fast recovery
- Very low temperature dependence

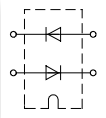
DH 2x...0-...

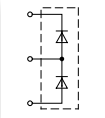
DHH

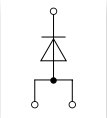
DHG... IM...

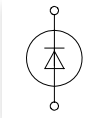
DHG... I...

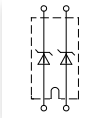
DHG... X...

Part Number	V_{RRM}	I_{FAV}	@ T_C	I_{FSM}	V_F	@ I_F	t_{rr}	I_{RM} typ.	-di/dt typ.	T_{VJM}	R_{thJC}	Package
		d = 0.5		10 ms 45 °C	T_{VJ} = 150 °C		typ. T_{VJ} = 25 °C					
	V	A	°C		V	°C	ns	A	A/µs	°C	K/W	
DHG5I600PA	600	5	105	40	2.17	5	35	2	100	150	3.15	TO-220AC
DHG5I600PM		5	85	40	2.17	5		2	100		4.20	TO-220ACFP
DHG10C600PB	600	2 × 5	105	40	2.17	5	35	2	100	150	3.15	TO-220AB
DHG30I600PA	600	30	95	200	2.24	30	35	12	600	150	0.60	TO-220AC
DHG30IM600PC		30	95	200	2.22	30		12	600		0.60	TO-263AB
DHG30I600HA	600	30	85	200	2.21	30	35	12	600	150	0.70	TO-247AD
DHG60C600HB		2 × 30	85	200	2.21	30		12	600		0.70	TO-247AD
DHG60I600HA		60	95	430	2.10	60		24	1200		0.30	TO-247AD
DHG50X650NA	650	2 × 25	70	200	2.03	25	35	12	600	150	1.20	SOT-227b miniBLOC
DHG100X650NA		2 × 50	80	430	2.00	50		20	1200		0.60	SOT-227b miniBLOC
DHG10I1200PA	1200	10	95	65	2.13	10	75	8	350	150	1.80	TO-220AC
DHG10I1200PM		10	30	65	2.13	10		8	350		4.00	TO-220ACFP
DHG20C1200PB	1200	2 × 10	95	65	2.13	10	75	8	350	150	1.80	TO-220AB
DHG20I1200PA		20	105	135	2.16	20		19	750		0.80	TO-220AC
DHG20I1200HA	1200	20	95	135	2.14	20	75	19	750	150	0.90	TO-247AD
DHG40C1200HB		2 × 20	95	135	2.14	20		19	750		0.90	TO-247AD
DHG50X1200NA	1200	2 × 25	70	180	2.00	25	75	25	1000	150	1.20	SOT-227b miniBLOC
DHG30I1200HA		30	90	180	2.16	30		25	1000		0.70	TO-247AD
DHG100X1200NA	1200	2 × 50	65	430	2.05	50	75	50	2500	150	0.60	SOT-227b miniBLOC
DHG60I1200HA		60	95	430	2.22	60		50	2500		0.30	TO-247AD
DHG10I1800PA	1800	10	85	65	2.30	10	300	8	200	150	2.15	TO-220AC
DHG10IM1800UZ		10	100	60	2.33	10		13	250		1.50	TO252AA
DH20-18A	1800	20	95	150	2.35	20	300	22	400	150	0.90	TO-247AD
DH40-18A		40	100	400	2.08	40		50	750		0.45	TO-247AD
DH60-14A	1400	60	100	700	2.03	60	230	60	800	150	0.30	TO-247AD
DH60-16A	1600											TO-247AD
DH60-18A	1800											TO-247AD
DHH55-36N1F	2 × 1800	60	50	700	2.03	60	230	60	800	150	0.60	ISOPLUS i4-PAC™
DH2X60-18A	1800	2 × 60	55	700	2.02	60	230	60	800	150	0.60	SOT-227b miniBLOC
DH2X61-18A		2 × 60	55	700	2.02	60		60	800		0.60	SOT-227b miniBLOC
DHG55I3300FE	3300	50	80	600	3.40	60	1650	55	500	150	0.45	ISOPLUS i4-PAC™
DHG40I4500KO	4500	43	80	600	3.50	50	1450	80	800	150	0.50	ISOPLUS264

X005b
TO-220AC

X007b
TO-220ABCP

X011b
TO-263AB

X011c
TO-263ABHV

X014a
TO-247AD

X014b
TO-247AD

X016a
ISOPLUS247™

X016b
ISOPLUS247™

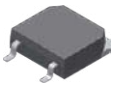
X019a
TO-268AAHV

X027a
SOT-227B miniBLOC

X027d
SOT-227UI miniBLOC

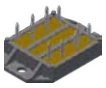
X101
ECO-PAC 1

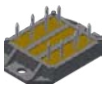
X102
ECO-PAC 2

FRED Diodes

Fast Recovery Epitaxial Diodes

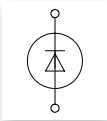
DSEI... / DFE

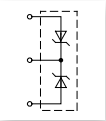
DSEK

Part Number	V_{RRM}	I_{FAV} d = 0.5	@ T_C	I_{FRMS}	I_{FSM} 10 ms 45 °C	V_F T_{VJ} = 150 °C	@ I_F	t_{rr} typ. T_{VJ} = 25 °C	I_{RM} typ. T_{VJ} = 100 °C	-di/dt	R_{thJC}	Package
	V	A	°C	A	A	V	A	ns	A	A/µs	K/W	
DSEI8-06A	600	8	115	16	100	1.30	8	35	2.5	64	2.50	TO-220AC
DSEI8-06AS	600	8	115	16	100	1.30	8	35	2.5	64	2.50	TO-263AB
DFE10I600PM	600	10	100	16	100	1.30	10	35	2.5	64	4.20	TO-220ACFP
DSEI12-06A	600	14	100	25	100	1.50	16	35	4.0	100	2.00	TO-220AC
DSEI12-06AS	600	14	100	25	100	1.50	16	35	4.0	100	2.00	TO-263AB
DSEI12-10A	1000	12	100	25	75	2.10	12	50	6.5	100	1.60	TO-220AC
DSEI12-12A	1200	11	100	25	75	2.20	12	50	6.5	100	1.60	TO-220AC
DSEI12-12AZ	1200	11	100	25	75	2.20	12	50	6.5	100	1.60	TO-263ABHV
DSEI20-12A	1200	17	85	70	130	1.87	12	40	7.0	100	1.60	TO-220AC
DSEI25-06A	600	25	110	35	240	1.55	25	35	9.0	200	1.20	TO-220AC
DSEI19-06AS	600	20	65	25	100	1.50	16	35	4.0	100	2.00	TO-263AB
DSEI25-06AS	600	25	110	35	240	1.55	25	35	9.0	200	1.20	TO-263AB
DSEI36-06AS	600	37	85	70	300	1.40	37	35	10.0	240	1.00	TO-263AB
DFE25I600HA	600	25	110	70	240	1.52	25	35	9.0	200	1.20	TO-247AD
DSEI30-06A	600	37	85	70	300	1.40	37	35	10.0	240	1.00	TO-247AD
DSEI30-10A	1000	30	85	70	200	2.00	36	35	16.0	240	0.90	TO-247AD
DSEI30-10AR	1000	30	85	70	200	2.00	36	35	16.0	240	0.90	ISOPLUS247™
DSEI30-12A	1200	26	85	70	200	2.20	30	40	16.0	240	0.90	TO-247AD
DSEK60-02A	200	2 × 34	115	50	325	0.85	30	35	4.0	100	1.00	TO-247AD
DSEK60-02AR	200	2 × 34	115	50	325	0.85	30	35	4.0	100	1.00	ISOPLUS247™
DSEK60-06A	600	2 × 30	85	50	300	1.40	37	35	10.0	240	1.00	TO-247AD
DSEK60-12A	1200	2 × 26	85	50	200	2.20	30	40	16.0	240	0.90	TO-247AD
DSEI60-02A	200	69	85	98	600	0.88	60	35	8.0	200	0.75	TO-247AD
DSEI60-06A	600	60	70	100	550	1.50	70	35	19.0	480	0.75	TO-247AD
DSEI60-10A	1000	60	60	100	500	1.80	60	35	32.0	480	0.66	TO-247AD

©2023 Littelfuse, Inc

FRED Diodes

Fast Recovery Epitaxial Diodes

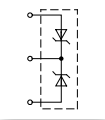

DSEK

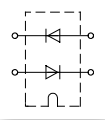

DSEI... 2x... 0-...

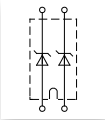

DSEI... 2x...1-...

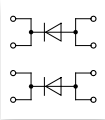

2x...1-...

Part Number	V_{RRM}	I_{FAV} d = 0.5	@ T_C	I_{FRMS}	I_{FSM} 10 ms 45 °C	V_F T_{VJ} = 150 °C	@ I_F	t_{rr} typ. T_{VJ} = 25 °C	I_{RM} typ. T_{VJ} = 100 °C	-di/dt	R_{thJC}	Package
	V	A	°C	A	A	V	A	ns	A	A/µs	K/W	
DSEI60-12A	1200	52	60	100	500	2.00	60	40	32	480	0.66	TO-247AD
DSEI120-06A	600	126	70	100	600	1.12	70	35	17	200	0.35	TO-247AD
DSEI120-12A	1200	109	60	100	600	1.55	70	40	25	200	0.35	TO-247AD
DSEI120-12AZ	1200	109	60	100	600	1.55	70	40	25	200	0.35	TO-268AAHV
DSEK300-06A	600	2 × 150	105	270	2000	1.20	150	77	50	600	0.20	SOT-227UI miniBLOC
DSEI2x30-04C	400	2 × 30	85	70	300	1.40	30	35	10	240	1.25	SOT-227B miniBLOC
DSEI2x30-06C	600	2 × 30	85	70	300	1.40	30	35	10	240	1.25	SOT-227B miniBLOC
DSEI2x30-10B	1000	2 × 30	50	70	200	2.00	30	35	16	240	1.25	SOT-227B miniBLOC
DSEI2x30-12B	1200	2 × 28	50	70	200	2.20	30	40	16	240	1.25	SOT-227B miniBLOC
DSEI2x31-04C	400	2 × 30	85	70	300	1.40	30	35	10	240	1.25	SOT-227B miniBLOC
DSEI2x31-06C	600	2 × 30	85	70	300	1.40	30	35	10	240	1.25	SOT-227B miniBLOC
DSEI2x31-10B	1000	2 × 30	50	70	200	2.00	30	35	16	240	1.25	SOT-227B miniBLOC
DSEI2x31-12B	1200	2 × 28	50	70	200	2.20	30	40	16	240	1.25	SOT-227B miniBLOC
DSEI2x61-02A	200	2 × 71	85	100	950	0.88	60	35	8	200	0.80	SOT-227B miniBLOC
DSEI2x60-04C	400	2 × 60	70	100	550	1.50	60	35	19	480	0.70	SOT-227B miniBLOC
DSEI2x61-04C	400	2 × 60	70	100	550	1.50	60	35	19	480	0.70	SOT-227B miniBLOC
DSEI2x61-06C	600	2 × 60	70	100	550	1.50	60	35	19	480	0.70	SOT-227B miniBLOC
DSEI2x61-10B	1000	2 × 60	50	100	500	1.80	60	35	32	480	0.70	SOT-227B miniBLOC
DSEI2x61-12B	1200	2 × 52	50	100	450	2.15	60	40	32	480	0.70	SOT-227B miniBLOC
DSEI2x61-06P	600	2 × 60	70	100	550	1.50	60	35	19	480	0.70	ECO-PAC 1
DSEI2x61-12P	1200	2 × 52	50	100	450	2.15	60	40	32	540	0.70	ECO-PAC 1
DSEI2x121-02A	200	2 × 123	70	150	1200	0.95	120	35	12	200	0.50	SOT-227B miniBLOC
DSEI2x101-06A	600	2 × 96	70	150	1200	1.17	100	35	19	200	0.50	SOT-227B miniBLOC
DFE240X600NA	600	2 × 120	80	150	1200	1.20	120	35	27	600	0.40	SOT-227B miniBLOC
DFE250X600NA	600	2 × 125	80	150	1300	1.16	125	35	27	600	0.40	SOT-227B miniBLOC
DSEI2x101-12A	1200	2 × 91	50	130	900	1.61	100	40	24	200	0.50	SOT-227B miniBLOC
DSEI2x101-06P	600	2 × 96	70	150	1200	1.17	100	40	19	200	0.50	ECO-PAC 2
DSEI2x101-12P	1200	2 × 91	50	130	900	1.61	100	40	24	200	0.50	ECO-PAC 2
DSEI2x161-02P	200	2 × 165	70	270	1200	1.05	200	35	20	200	0.29	ECO-PAC 2
DSEI2x161-06P	600	2 × 147	70	270	1200	1.40	200	35	45	200	0.29	ECO-PAC 2
DSEI2x161-12P	1200	2 × 128	70	270	1200	1.75	200	40	48	200	0.29	ECO-PAC 2

X005a
TO-220AB

X014a
TO-247AD

X019
TO-268AA

X126c
Y4

X005b
TO-220AC

X014b
TO-247AD

X027a
SOT-227B miniBLOC

X126d
Y4

X011c
TO-263ABHV

X016c
ISO247™

X125e
TO-240

FRED & HiPerFRED™ Modules

Part Number	V_{RRM}	I_{FAV}	@ T_C	I_{FRMS}	I_{FSM}	V_F	@ I_F	t_{rr} typ.	I_{RM} typ.	-di/dt	R_{thJC}	P_{tot}	Package
		d = 0.5			10 ms 45 °C	T_{VJ} = 125 °C		T_{VJ} = 25 °C	T_{VJ} = 100° C				
	V	A	°C	A	A	V	A	ns	A	A/µs	K/W	W	
FRED													
MEO550-02DA	200	582	75	822	4800	1.08	520	150	15	200	0.071	1750	Y4
MEO500-06DA	600	514		726		1.41		250	132	800			
MEO450-12DA	1200	453		640		1.76		450	165	800			
MEK75-12DA	1200	2 × 75	75	107	1200	1.85	100	250	33	200	0.45	280	TO-240
MEA75-12DA	1200	2 × 75											
MEE75-12DA	2 × 1200	75											
MEK95-06DA	600	2 × 95	75	142	1200	1.36	100	250	21	200	0.45	280	TO-240
MEA95-06DA	600	2 × 95											
MEE95-06DA	2 × 600	95											
MEK250-12DA	1200	2 × 260	75	367	2400	1.54	260	450	83	400	0.143	875	Y4
MEA250-12DA	1200	2 × 260											
MEE250-12DA	2 × 1200	260											
MEK300-06DA	600	2 × 304	75	430	2400	1.19	260	250	66	400	0.143	875	Y4
MEA300-06DA	600	2 × 304											
MEE300-06DA	2 × 600	304											
MEK350-02DA	200	2 × 356	75	503	2400	0.92	260	150	15	200	0.143	875	Y4
HiPerFRED™													
MEK150-04DA	400	2 × 150	100	200	1200	1.401	300	300	11	100	0.350	360	TO-240
MEK600-04DA	400	2 × 575	80	800	3000	1.1	400	220	80	900	0.110	1100	Y4
MPK95-06DA	600	2 × 95	110	200	1200	1.4	100	35	5.5	100	0.575	215	TO-240

1 T_{VJM} = 150°C

Diode connections for Fig. X125 (TO-240)

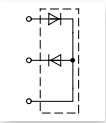
MEE

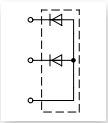
MEA

Diode connections for Fig. X126 (Y4: 34 mm package)

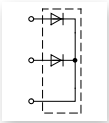
MEK/MPK

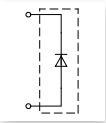
MEO

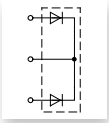
MEK

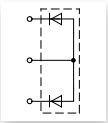
MEA

SemiFast Diodes

DSDI...

Part Number	V_{RRM}	I_{FAV}	@ T_C	I_{FRMS}	I_{FSM}	V_F	@ I_F	t_{rr} typ.	I_{RM} typ.	-di/dt	R_{thJC}	Package
		d = 0.5			10 ms 45 °C	T_{VJ} = 125 °C		T_{VJ} = 25 °C	T_{VJ} = 100 °C			
	V	A	°C	A	A	V	A	ns	A	A/µs	K/W	
DSDI60-14A	1400	63	60	100	500	4.1	70	300	60	500	0.4	TO-247AD
DSDI60-16A	1600	63	60	100	500	4.1	70	300	60	500	0.4	TO-247AD
DSDI60-18A	1800	63	60	100	500	4.1	70	300	60	500	0.4	TO-247AD

©2023 Littelfuse, Inc

Silicon Carbide Schottky Diodes Discrete

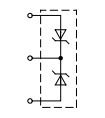

DSSK...

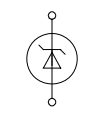

DHG...I...

Part Number	V_{RRM}	I_{FAV}	@ T_C	V_F	I_F	Q_C	R_{thJC}	Package
		DC		DC @125 °C				
	V	A	°C	V	A	nC	K/W	
LSIC2SD065A10A	650	10	147	27	1.5	30	1.50	TO-220AC
LSIC2SD065A20A		20	135	45	1.5	63	1.10	
LSIC2SD065D10A	650	10	147	27	1.5	30	1.50	TO-263ABHV
LSIC2SD065D20A		20	135	45	1.5	63	1.10	
LSIC2SD065E20CCA	650	10/20[1]	147	27/54[1]	1.5	30	1.5/0.75[1]	TO-247AD
LSIC2SD065E40CCA		20/40[1]	135	45/90[1]	1.5	63	1.1/0.55[1]	
LSIC2SD120A10A	1200	10	151	28	1.5	57	1.10	TO-220AC
LSIC2SD120A20A		20	150	54.5	1.5	115	0.60	
LSIC2SD120D10A	1200	10	151	28	1.5	57	1.10	TO-263ABHV
LSIC2SD120D20A		20	150	54.5	1.5	115	0.60	
LSIC2SC120E20CCA	1200	10/20	154	32/64	1.5	56	1/0.5	TO-247AD
LSIC2SC120E30CCA		15/30	152	26/52	1.5	91	0.7/0.37	
LSIC2SC120E40CCA		20/40	149	55/110	1.5	125	0.6/0.3	
LSIC2SB170B10A	1700	10	150	30	1.5	57	TBD	TO-247AD
LSIC2SB170B25A		25	150	61	1.5	122	TBD	
LSIC2SB170B50A		50	150	143	1.5	392	0.20	

1 per leg/component

Silicon Carbide Schottky Diodes

No reverse recovery

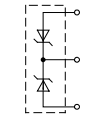

DCG...C...

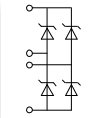

DCG...B.../FBS

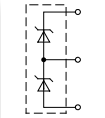

DCG...P...

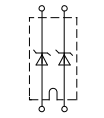

DCG...X...

Part Number	V_{RRM}	I_{F80} per diode	I_{FAV} d = 0.5	@ T_C	V_F	I_F	R_{thJC}	Package
					DC @125 °C			
	V	A	A	°C	V	A	K/W	
Dual								
DCG45X1200NA	1200	30	2 × 22	80	2.20	20	1.10	SOT-227B miniBLOC
DCG85X1200NA	1200	59	2 × 43	80	2.20	40	0.57	SOT-227B miniBLOC
DCG130X1200NA	1200	88	2 × 64	80	2.30	60	0.39	SOT-227B miniBLOC
LSIC2SD120N40PA	1200	33	2 × 50	80	2.10	20	0.95	SOT-227B miniBLOC
LSIC2SD120N80PA		60	2 × 90	80	2.10	20	0.58	SOT-227B miniBLOC
LSIC2SD120N120PA		96	2 × 146	80	2.10	20	0.34	SOT-227B miniBLOC
DCG200X1200NA		120	2 x 90	80	2.25	100	0.27	SOT-227B miniBLOC
Common Cathode								
DCG20C1200HR	1200	13	2 × 10	80	2.20	10	3.00	ISO247™
DCG35C1200HR	1200	23	2 × 17	80	2.20	20	1.80	ISO247™
Phase Leg								
DCG10P1200HR	2 × 1200	13	10	80	2.20	10	3.00	ISO247™
DCG17P1200HR	2 × 1200	23	17	80	2.20	20	1.80	ISO247™
Rectifier Bridge								
DCH15B1200FC	1200	12	4 × 17	80	2.20	10	3.50	ISOPLUS i4-PAC™
DCG80B1200NA	1200	53	2 x 79	80	1.6	50	0.7	SOT-227B
DCG81B1200NA	1200	53	2 x 79	80	1.6	50	0.7	SOT-227B

More Information

Optimization of Freewheeling Device Implementation in SiC MOSFETS

This paper discusses the optimization of freewheeling device implementation for SiC MOSFETs in a half-bridge configuration. It presents the dynamic characterization of multiple freewheeling device implementations with SiC MOSFET switching. The behaviors of SiC MOSFET body diode and SiC Schottky barrier diode (SBD) are compared with switching devices of SiC MOSFETs with and without Kelvin source connections. This paper aims to determine whether the body diode of a SiC MOSFET is a limiting factor for high speed switching of MOSFETs.

Scan to visit now

X004
TO-252AA

X004a
TO-252

X005b
TO-220AC

X008b
TO-262AA (I²-PAK)

X011a
TO-263AA

X011b
TO-263AB

X011c
TO-263ABHV

X014a
TO-247AD

X014b
TO-247AD

X016a
ISOPLUS247™

X016b
ISOPLUS247™

X016c
ISO247™

X019
TO-268AA

X019a
TO-268AAHV

X022f
ISOPLUS264™

X027a
SOT-227B miniBLOC

X201
FP-Case

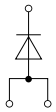
DLA...IM...
DMA...IM...

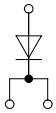
DNA...EM...
DAA...EM...

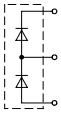
DSP
DMA...P...
DLA...P

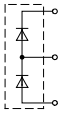
DSP
DMA...P...
DLA...P

DS/DSA/DSI
DMA... E/I...
DLA...I...

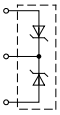
DSIK...

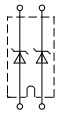
DSI 2x...
DA/MA...X...

DMA...XA...
DAA...XA..

Rectifier Diodes

Part Number	V_{RRM}	I_{FAV}	@ T_C	P_{RSM}	I_{FRMS}	I_{FSM} 10 ms 45 °C	V_{10}	r_F	T_{VJM}	R_{thJC}	R_{thCH}	Package
	V	A	°C	kW	A	A	V	mΩ	°C	K/W	K/W	
DSA1-12D	1200	2.3	45	1.6	7	110	0.80	67	150	80.00	–	FP-Case
DSA1-16D	1600											
DSA1-18D	1800											
DLA5P800UC	2 × 800	5	140	–	20	40	0.74	44	175	5.50	0.50	TO-252AA
DSP8-08S	2 × 800	8	160	–	25	100	0.79	33	175	1.50	0.25	TO-263AB
DSP8-12S	2 × 1200											
DSP8-08A	2 × 800	8	160	–	25	100	0.79	33	175	1.50	0.25	TO-220AB
DSP8-12A	2 × 1200											
DSP8-08AS	2 × 800	8	160	–	25	100	0.79	33	175	1.50	0.25	TO-263AA
DSP8-12AS	2 × 1200											
DLA10IM800UC	800	10	100	–	20	80	0.80	22	175	3.15	0.50	TO-252AA
DLA20IM800PC	800	20	100	–	35	200	0.80	19	175	1.80	0.25	TO-263AB
DMA10IM1200UZ	1200	10	150	–	20	120	0.82	37	175	1.50	0.50	TO-252
DMA10IM1600UZ	1600											
DMA10P1200UZ	1200	10	140	–	20	100	0.90	37	175	2.00	0.50	TO-252
DMA10P1600UZ	1600											
DMA10I1600PA	1600	10	150	–	20	120	0.82	37	175	1.50	0.50	TO-220AC
DMA10IM1600PZ	1600	10	150	–	20	120	0.82	37	175	1.50	0.25	TO-263ABHV
DMA10P1600PZ	2 × 1600											
DMA10P1800PZ	2 × 1800											
DAA10EM1800PZ	1800	10	150	1.6	25	150	0.81	32	175	1.50	0.25	TO-263ABHV
DAA10P1800PZ	2 × 1800	10	150	1.6	25	150	0.82	37	175	1.50	0.25	

©2023 Littelfuse, Inc

Rectifier Diodes

Part Number	V_{RRM}	I_{FAV}	@ T_C	P_{RSM}	I_{FRMS}	I_{FSM} 10 ms 45 °C	V_{10}	r_F	T_{VJM}	R_{thJC}	R_{thCH}	Package
	V	A	°C	kW	A	A	V	mΩ	°C	K/W	K/W	
DMA10P1200HR	2 × 1200	10	145	–	25	120	0.81	34	175	2.00	0.25	ISO247™
DMA10P1600HR	2 × 1600											
DSP25-12A	2 × 1200	25	135	–	70	300	0.81	13.8	175	0.90	0.25	TO-247AD
DSP25-16A	2 × 1600											
DSP25-12AT	2 × 1200	25	135	–	70	300	0.81	13.8	175	0.90	0.15	TO-268AA
DSP25-16AT	2 × 1600											
DSP25-16AR	2 × 1600	25	110	–	70	300	0.81	13.8	175	1.50	0.25	ISOPLUS247™
DSI30-08A	800	30	130	–	35	300	0.82	14.9	175	0.90	0.50	TO-220AC
DSI30-12A	1200											
DSI30-16A	1600											
DSI30-08AS	800	30	130	–	35	300	0.82	14.9	175	0.90	0.25	TO-263AB
DSI30-12AS	1200											
DSI30-16AS	1600											
DMA30IM1600PZ	1600	30	140	–	35	300	0.82	14.1	175	0.70	0.25	TO-263ABHV
DMA30E1800HA	1800	30	140	–	70	370	0.88	12.1	175	0.70	0.25	TO-247AD
DMA30P1200HB	2 × 1200	30	130	–	70	370	0.81	12.7	175	0.80	0.25	TO-247AD
DMA30P1600HB	2 × 1600											
DMA30P1600HR	2 × 1600	30	105	–	50	300	0.82	13.5	175	1.30	0.25	ISO247™
DNA30ER2200IY	2200	30	140	–	35	370	0.88	12.9	175	0.70	0.50	TO-262AA (I2-PAK)
DNA30E2200PA												TO-220AC
DNA30E2200PZ	2200	30	140	–	35	370	0.88	12.9	175	0.70	0.25	TO-263ABHV
DNA30EM2200PZ												
DNA30E2200FE	2200	30	100	–	70	370	0.88	12.2	175	1.35	0.20	ISOPLUS i4-PAC™
DLA40IM800PC	800	40	130	–	35	300	0.81	8	175	0.80	0.25	TO-263AB
DSI45-08A	800	45	130	–	70	480	0.81	9.1	175	0.55	0.25	TO-247AD
DSI45-12A	1200	45	130	–	70	480	0.81	9.1	175	0.55	0.25	TO-247AD
DSI45-16A	1600											
DSP45-12A	2 × 1200	45	130	–	70	480	0.81	9.1	175	0.55	0.25	TO-247AD
DSP45-12AZ											0.15	TO-268AAHV
DSP45-16A	2 × 1600	45	130	–	70	480	0.81	9.1	175	0.55	0.25	TO-247AD
DSP45-16AZ											0.15	TO-268AAHV
DSP45-18A	2 × 1800	45	130	–	70	480	0.81	9.1	175	0.55	0.25	TO-247AD
DSI45-16AR	1600	45	100	–	70	480	0.81	9.1	175	0.90	0.25	ISOPLUS247™
DSIK45-16AR	1600	2 × 45										
DSP45-16AR	2 × 1600	45										

X014a
TO-247AD

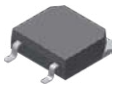

X019a
TO-268AAHV

X022f
ISOPLUS264™

X016c
ISO247™

X027a
SOT-227B miniBLOC

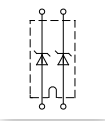

DSI 2x...
DA/MA...X...

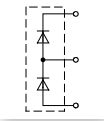

DSP
DMA...P..
DLA...P

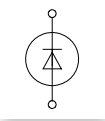

DS/DSA/DSI
DMI...E/I...
DLA...I...

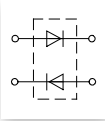

DMA...XA...
DAA...XA..

Rectifier Diodes

Part Number	V_{RRM}	I_{FAV}	@ T_C	P_{RSM}	I_{FRMS}	I_{FSM} 10 ms 45 °C	V_{10}	r_F	T_{VJM}	R_{thJC}	R_{thCH}	Package
	V	A	°C	kW	A	A	V	mΩ	°C	K/W	K/W	
DMA50I800HA	800	50	130	–	70	500	0.81	8.6	175	0.45	0.25	TO-247AD
DMA50I1200HA	1200											
DMA50I1600HA	1600											
DMA50P1200HR	2 × 1200	50	105	–	70	500	0.82	9.0	175	0.70	0.25	ISO247™
DMA50P1200HB	2 × 1200	50	130	–	70	500	0.81	8.6	175	0.45	0.25	TO-247AD
DMA50P1600HB	2 × 1600											
DLA60I1200HA	1200	60	150	–	70	850	0.77	4.2	175	0.30	0.25	TO-247AD
DMA80I1600HA	1600	80	125	–	70	1300	0.82	4.8	175	0.35	0.25	
DMA80IM1600HB	1600	80	125	–	70	1300	0.82	4.8	175	0.35	0.25	
DLA100IM1200TZ	1200	100	105	–	70	1300	0.85	4.6	175	0.35	0.15	TO-268AAHV
DSI2x55-12A	1200	2 × 60	95	–	120	800	0.83	6.2	150	0.60	0.10	SOT-227B miniBLOC
DSI2x55-16A	1600											
DNA120E2200KO	2200	120	125	–	70	2000	0.75	3.8	175	0.25	0.15	ISOPLUS264™
DMA150E1600NA	1600	150	90	–	150	3000	0.83	2.0	150	0.25	0.10	SOT-227B miniBLOC
DMA200X1600NA	1600	2x100	100	–	150	1500	0.8	4.0	150	0.30	0.10	SOT-227B miniBLOC
DMA200XA1600NA												
DAA200X1800NA	1800	2x100	100	20	150	1500	0.8	4.0	150	0.30	0.10	SOT-227B miniBLOC
DAA200XA1800NA												

©2023 Littelfuse, Inc

Break-Over-Diodes Sets

We deliver the following:

- A special selection of more than 2 pieces IXBOD1-... for every break down voltage of V_{BO} > 2000 V
- Example type designations
  - IXBOD Set SA05/00
  - V_{BO} = 4700 V ±100 V
  - (we deliver 5 pieces of single-selected IXBOD1-... in one plastic bag)
  - Customers use these products on PCB connected in series with parallel resistor R = 10 MW across each IXBOD.

X021
FP-Case (oil-proof)

X202
BOD-Package

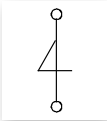

Version R

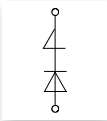

Version RD

Fast Break-Over Diodes

Part Number	V_{BO}		I_{BO}	I_H	V_H	I_D	I_{AVM}[1]	I_{SM}	dv/dt	R_{thJA}	Package
	T_{VJ} = 25 °C, $K_T = 2 \cdot 10^{-3}$ K^{-1}			T_{VJ} = 25 °C		T_{VJ} = 125 °C, $V_D = 0.8 \cdot V_{BO}$	T_{amb} = 50 °C				
	V		mA	mA	V	µA	A	A	V/µs	K/W	
IXBOD 1-06	600	±50	<15	30	4–8	20	0.9	200	>1000	60	FP-Case (oil proof)
IXBOD 1-07	700										
IXBOD 1-08	800	±50	<15	30	4–8	20	0.9	200	>1000	60	FP-Case (oil proof)
IXBOD 1-09	900										
IXBOD 1-10	1000										
IXBOD 1-12R	1200	±50	<15	30	4–8	100	0.9	200	>1500	20	BOD-Package
IXBOD 1-12RD											
IXBOD 1-13R	1300	±50	<15	30	4–8	100	0.9	200	>1500	20	BOD-Package
IXBOD 1-13RD											
IXBOD 1-14R	1400	±50	<15	30	4–8	100	0.9	200	>1500	20	BOD-Package
IXBOD 1-14RD											
IXBOD 1-15R	1500	±50	<15	30	4–8	100	0.9	200	>1500	20	BOD-Package
IXBOD 1-15RD											
IXBOD 1-16R	1600	±50	<15	30	4–8	100	0.9	200	>1500	20	BOD-Package
IXBOD 1-16RD											
IXBOD 1-17R	1700	±50	<15	30	4–8	100	0.9	200	>1500	20	BOD-Package
IXBOD 1-17RD											
IXBOD 1-18R	1800	±50	<15	30	4–8	100	0.9	200	>1500	20	BOD-Package
IXBOD 1-18RD											
IXBOD 1-19R	1900	±50	<15	30	4–8	100	0.9	200	>1500	20	BOD-Package
IXBOD 1-19RD											
IXBOD 1-20R	2000	±50	<15	30	4–8	100	0.9	200	>1500	20	BOD-Package
IXBOD 1-20RD											
IXBOD 1-21R	2100	±50	<15	30	4–8	100	0.9	200	>1500	20	BOD-Package
IXBOD 1-21RD											
IXBOD 1-22R	2200	±50	<15	30	4–8	100	0.9	200	>1500	20	BOD-Package
IXBOD 1-22RD											
IXBOD 1-23R	2300	±50	<15	30	4–8	100	0.9	200	>1500	20	BOD-Package
IXBOD 1-23RD											
IXBOD 1-24R	2400	±50	<15	30	4–8	100	0.9	200	>1500	20	BOD-Package
IXBOD 1-24RD											
IXBOD 1-25R	2500	±50	<15	30	4–8	100	0.9	200	>1500	20	BOD-Package
IXBOD 1-25RD											
IXBOD 1-26R	2600	±100	<15	30	4–8	100	0.9	200	>2500	20	BOD-Package
IXBOD 1-26RD											
IXBOD 1-28R	2800	±100	<15	30	4–8	100	0.9	200	>2500	20	BOD-Package
IXBOD 1-28RD											
IXBOD 1-30R	3000	±100	<15	30	4–8	100	0.9	200	>2500	20	BOD-Package
IXBOD 1-30RD											
IXBOD 1-32R	3200	±100	<15	30	4–8	100	0.9	200	>2500	20	BOD-Package
IXBOD 1-32RD											
IXBOD 1-34R	3400	±100	<15	30	4–8	100	0.9	200	>3500	20	BOD-Package
IXBOD 1-36R	3600										
IXBOD 1-38R	3800	±100	<15	30	4–8	100	0.9	200	>3500	20	BOD-Package
IXBOD 1-40R	4000										
IXBOD 1-42R	4200	±100	<15	30	4–8	100	0.9	200	>3500	20	BOD-Package

Advantages compared with IXBOD 1:

- Temperature coefficient KT reduced by a factor of 3
  - Tighter definition of the break-over voltage V_{BO}
    - $V_{BO}(T_{VJ}) = VBO, 25°C [1 + K_T (T_{VJ} - 25°C)]$
  - More precise and controllable design due to smaller tolerances
- Significant reduction of switching-on time, now down to just a few nanoseconds

Applications:

- Protection circuits for thyristors in highly valuable designs
  - High-DC current power transmissions for long distances, such as for offshore windmills or hydroelectric dams
- High intensity discharge lighting (HID)

Part Number	V_{BO}		I_{BO}	I_H	V_H	I_D	I_{AVM}[1]	I_{SM}	dv/dt	R_{thJA}	Package
	T_{VJ} = 25 °C, KT = 0.7·10⁻³ K⁻¹			T_{VJ} = 25 °C		T_{VJ} = 125 °C, V_D = 0.8·V_{BO}	T_{amb} = 50 °C				
	V		mA	mA	V	µA	A	A	V/µs	K/W	
IXBOD 2-01	100	±10% · V_{BO}	15	20	4–8	200	0.90	250	>1000	60	FP-Case (oil proof)
IXBOD 2-02	200										
IXBOD 2-03	300	±10% · V_{BO}	15	20	4–8	200	0.90	250	>1000	60	FP-Case (oil proof)
IXBOD 2-04	400										
IXBOD 2-05	500	±50	15	20	4–8	200	0.90	250	>1000	60	FP-Case (oil proof)
IXBOD 2-06	600										
IXBOD 2-07	700	±50	15	20	4–8	200	0.90	250	>1000	60	FP-Case (oil proof)
IXBOD 2-08	800										
IXBOD 2-09	900	±50	15	20	4–8	200	0.90	250	>1000	60	FP-Case (oil proof)
IXBOD 2-10	1000										
IXBOD 2-11	1100	±50	15	20	4–8	200	0.90	250	>1000	60	FP-Case (oil proof)
IXBOD 2-12	1200										
IXBOD 2-13	1300	±50	15	20	4–8	200	0.90	250	>1000	60	FP-Case (oil proof)
IXBOD 2-14	1400										
IXBOD 2-15R	1500	±50	15	20	4–8	200	0.90	250	>1500	20	BOD-Package
IXBOD 2-15RD											
IXBOD 2-16R	1600	±50	15	20	4–8	200	0.90	250	>1500	20	BOD-Package
IXBOD 2-16RD											
IXBOD 2-17R	1700	±50	15	20	4–8	200	0.90	250	>1500	20	BOD-Package
IXBOD 2-17RD											
IXBOD 2-18R	1800	±50	15	20	4–8	200	0.90	250	>1500	20	BOD-Package
IXBOD 2-18RD											
IXBOD 2-19R	1900	±50	15	20	4–8	200	0.90	250	>1500	20	BOD-Package
IXBOD 2-19RD											
IXBOD 2-20R	2000	±50	15	20	4–8	200	0.90	250	>1500	20	BOD-Package
IXBOD 2-20RD											
IXBOD 2-21R	2100	±50	15	20	4–8	200	0.90	250	>1500	20	BOD-Package
IXBOD 2-21RD											
IXBOD 2-22R	2200	±50	15	20	4–8	200	0.90	250	>1500	20	BOD-Package
IXBOD 2-22RD											
IXBOD 2-23R	2300	±50	15	20	4–8	200	0.90	250	>1500	20	BOD-Package
IXBOD 2-23RD											
IXBOD 2-24R	2400	±50	15	20	4–8	200	0.90	250	>1500	20	BOD-Package
IXBOD 2-24RD											
IXBOD 2-25R	2500	±50	15	20	4–8	200	0.90	250	>1500	20	BOD-Package
IXBOD 2-25RD											
IXBOD 2-26R	2600	±100	15	20	4–8	200	0.90	250	>1500	20	BOD-Package
IXBOD 2-26RD											
IXBOD 2-27R	2700	±100	15	20	4–8	200	0.90	250	>1500	20	BOD-Package
IXBOD 2-27RD											
IXBOD 2-28R	2800	±100	15	20	4–8	200	0.90	250	>1500	20	BOD-Package
IXBOD 2-28RD											

©2023 Littelfuse, Inc

Fast Break-Over Diodes

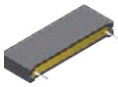

BOD-Package

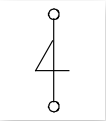

Version R

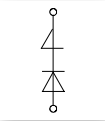

Version RD

Part Number	V_{BO} T_{VJ} = 25 °C K_T = 0.7·10^{-3} K^{-1}		I_{BO}	I_H	V_H	I_D T_{VJ} = 125 °C V_D = 0.8·V_{BO}	I_{AVM}[1] T_{amb} = 50 °C	I_{SM}	dv/dt	R_{thJA}
	V		mA	mA	V	µA	A	A	V/µs	K/W
IXBOD2-29R	2900	±100	15	20	4–8	200	0.90	250	>2500	20
IXBOD2-29RD										
IXBOD2-30R	3000	±100	15	20	4–8	200	0.90	250	>2500	20
IXBOD2-30RD										
IXBOD2-31R	3100	±100	15	20	4–8	200	0.90	250	>2500	20
IXBOD2-31RD										
IXBOD2-32R	3200	±100	15	20	4–8	200	0.90	250	>2500	20
IXBOD2-32RD										
IXBOD2-33R	3300	±100	15	20	4–8	200	0.90	250	>2500	20
IXBOD2-33RD										
IXBOD2-34R	3400	±100	15	20	4–8	200	0.90	250	>2500	20
IXBOD2-34RD										
IXBOD2-35R	3500	±100	15	20	4–8	200	0.90	250	>2500	20
IXBOD2-35RD										
IXBOD2-36R	3600	±100	15	20	4–8	200	0.90	250	>2500	20
IXBOD2-36RD										
IXBOD2-37R	3700	±100	15	20	4–8	200	0.90	250	>2500	20
IXBOD2-37RD										
IXBOD2-38R	3800	±100	15	20	4–8	200	0.90	250	>2500	20
IXBOD2-38RD										
IXBOD2-39R	3900	±100	15	20	4–8	200	0.90	250	>2500	20
IXBOD2-39RD										
IXBOD2-40R	4000	±100	15	20	4–8	200	0.90	250	>2500	20
IXBOD2-40RD										
IXBOD2-41R	4100	±100	15	20	4–8	200	0.90	250	>2500	20
IXBOD2-41RD										
IXBOD2-42R	4200	±100	15	20	4–8	200	0.90	250	>2500	20
IXBOD2-42RD										
IXBOD2-43R	4300	±100	15	20	4–8	200	0.90	250	>3500	20
IXBOD2-44R	4400									
IXBOD2-45R	4500	±100	15	20	4–8	200	0.90	250	>3500	20
IXBOD2-46R	4600									
IXBOD2-47R	4700	±100	15	20	4–8	200	0.90	250	>3500	20
IXBOD2-48R	4800									
IXBOD2-49R	4900	±100	15	20	4–8	200	0.90	250	>3500	20
IXBOD2-50R	5000									
IXBOD2-51R	5100	±100	15	20	4–8	200	0.90	250	>3500	20
IXBOD2-52R	5200									
IXBOD2-53R	5300	±100	15	20	4–8	200	0.90	250	>3500	20
IXBOD2-54R	5400									
IXBOD2-55R	5500	±100	15	20	4–8	200	0.90	250	>3500	20
IXBOD2-56R	5600									

1 Leads soldered on PCB board, T_{stg} and T_{VJ} = -40 ... +125 °C

X004
TO-252AA

X005a
TO-220AB

X007a
TO-220ABFP

X011b
TO-263AB

X011c
TO-263ABHV

X014a
TO-247AD

X015a
PLUS247

X016a
ISOPLUS247™

X016c
ISO247™

X017a
TO-3P

X019
TO-268AA

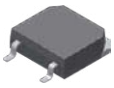
X019a
TO-268AAHV

X020a
TO-264

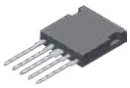
X024a
ISOPLUS i4-PAC™

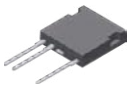
X024c
ISOPLUS i4-PAC™

X030a
SMPD -B

Compared to all other controlled semiconductor components, thyristors are very rugged devices. They feature the highest current capacity per chip area, especially at high voltages, and are mainly used as control devices in 50 Hz and 60 Hz AC main equipment

Principal applications include static converter circuits for the speed control of DC-drives, switching, and control functions for temperature, lighting, soft-start, etc. in single-phase and three-phase AC switch configurations. Phase control thyristors are designed for optimal forward conduction and reverse-blocking characteristics, as they have only moderate requirements for turn-on and turn-off parameters.

Phase Control Thyristors

I_{TAV} = 5–30 A

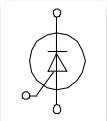
CLB...

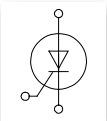
CS.../CL/MA...E/I...

Part Number	V_{RRM} V_{DRM}	I_{TAV}	@ T_C	$I_{T(RMS)}$	I_{TSM} 45°C 10 ms	$(dv/dt)_{cr}$	V_{TO}	r_T	T_{VJM}	R_{thJC}	R_{thCH}	Package
	V	A	°C	A	A	V/µs	V	mΩ	°C	K/W	K/W	
CLA5E1200UC	1200	5	135	8	70	500	0.89	85.0	150	1.50	0.50	TO-252AA
CLA5E1200PZ											0.25	TO-263ABHV
CLA15E1200NPB	1200	15	120	33	170	500	0.89	30	150	0.95	0.50	TO-220AB
CLA15E1200NPZ												TO-263ABHV
CLA16E800PN	800	10	90	16	180	500	0.81	24	150	4.00	0.50	TO-220ABFP
CLA16E1200PN	1200											
CS19-08ho1	800	20	110	31	160	500	0.86	22	150	0.70	0.50	TO-220AB
CS19-12ho1	1200											
CS19-08ho1S	800	20	110	31	160	500	0.86	22	150	0.70	0.50	TO-263AB
CS19-12ho1S	1200											
CMA20E1600PB	1600	20	115	31	180	500	0.92	28	150	0.70	0.50	TO-220AB
CMA20E1600PZ											0.25	TO-263ABHV
CS20-12io1	1200	20	130	31	260	1000	0.87	17.3	150	0.60	0.25	TO-257AD
CS20-14io1	1400											
CS20-16io1	1600											
CS20-22moF1	2200	18	85	28	200	2500	0.97	17	125	0.92	0.15	ISOPLUS i4-PAC™
CS20-25mo1F												
CS20-25moT1	2500	18	85	28	200	2500	0.97	17	125	0.80	0.15	TO-268AA
CS22-08io1M	800	16	90	25	300	500	0.86	13.2	150	2.50	0.50	TO-220ABFP
CS22-12io1M	1200											
CLA30E1200PB	1200	30	115	47	300	500	0.86	13.2	150	0.50	0.50	TO-220AB
CLA30E1200PC	1200	30	115	47	300	500	0.86	13.2	150	0.50	0.25	TO-263AB
CLA30E1200NPZ												TO-263ABHV

©2023 Littelfuse, Inc

Phase Control Thyristors

I_{TAV} = 30–100 A

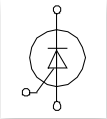

CLB...

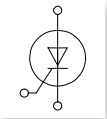

CS.../CL/MA...E/I...

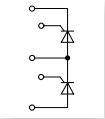

CLA.CMA...P...

Part Number	V_{RRM} V_{DRM}	I_{TAV}	@ T_C	$I_{T(RMS)}$	I_{TSM} 45°C 10 ms	$(dv/dt)_{cr}$	V_{TO}	r_T	T_{VJM}	R_{thJC}	R_{thCH}	Package
	V	A	°C	A	A	V/µs	V	mΩ	°C	K/W	K/W	
CLA100E1200TZ	1200	30	115	47	300	500	0.86	13.2	150	0.50	0.25	TO-268AAHV
CLB30I1200PZ												TO-263ABHV
CLA30E1200HB	1200	30	120	47	300	500	0.86	12.5	150	0.50	0.25	TO-257AD
CLB30I1200HB [1]												TO-257AD
CMA30E1600PB	1600	30	115	47	260	500	0.92	18	150	0.75	0.50	TO-220AB
CMA30E1600PZ	1600	30	115	47	260	500	0.92	18	150	0.75	0.25	TO-263ABHV
CMA30E1600PN	1600	30	40	47	260	500	0.92	18	150	2.50	0.50	TO-220ABFP
CS30-12io1	1200	30	120	47	400	1000	0.87	14.2	150	0.50	0.25	TO-257AD
CS30-14io1	1400											
CS30-16io1	1600											
CMA30P1600FC	2 × 1600	30	90	47	400	1000	0.87	14.2	150	1.00	0.25	ISOPLUS i4-PAC™
CLA40E1200NPZ	1200	40	125	63	520	500	0.85	9.9	150	0.40	0.25	TO-263ABHV
CLA40E1200NHB	1200	40	120	63	520	500	0.85	9.2	150	0.50	0.25	TO-257AD
CLA40E1200HR	1200	40	95	63	650	1000	0.85	7.9	150	0.80	0.25	ISO247™
CLB40I1200PZ	1200	40	125	63	520	500	0.85	9.9	150	0.40	0.25	TO-263ABHV
CLA40P1200FC	2 × 1200	40	95	63	650	1000	0.86	7.9	150	0.80	0.20	ISOPLUS i4-PAC™
CMA40E1600HR	1600	40	90	63	550	1000	0.81	9.8	150	0.80	0.25	ISO247™
CS45-08io1	800	45	110	71	520	1000	0.88	11	150	0.40	0.25	TO-257AD
CS45-12io1	1200											
CS45-16io1	1600											
CS45-16io1R	1600	45	80	71	520	1000	0.88	11	150	0.80	0.25	ISOPLUS247™
CLA50E1200HB	1200	50	125	79	650	1000	0.88	7.7	150	0.25	0.25	TO-257AD
CLA50E1200TC											0.15	TO-268AA
CMA50E1600HB	1600	50	110	79	550	1000	0.83	9.6	150	0.40	0.25	TO-257AD
CMA50E1600QB												TO-3P
CMA50P1600FC	2 × 1600	50	90	79	720	1000	0.88	6.7	150	0.70	0.20	ISOPLUS i4-PAC™
CS60-12io1	1200	60	110	75	1400	1000	0.82	5.3	140	0.32	0.15	PLUS247
CS60-14io1	1400											
CS60-16io1	1600											
CS60-16io1R	1600	60	90	75	1400	1000	0.82	5.3	140	0.45	0.15	ISOPLUS247™
CLA80E1200HF	1200	80	115	126	900	1000	0.88	6.3	150	0.20	0.25	PLUS247
CMA80E1600HB	1600	80	115	126	720	1000	0.9	6.4				TO-257AD
CLA100E1200HB	1200	100	105	160	1100	1000	0.82	5.2	150	0.20	0.15	TO-257AD
CLA100E1200KB												TO-264
CLA100E1200TZ												TO-268AAHV

1 Anode-gated

Fast Phase Control Thyristors

Part Number	V_{RRM} V_{DRM}	I_{TAV}	@ T_C	$I_{T(RMS)}$	I_{TSM} 45°C 10 ms	$(dv/dt)_{cr}$	V_{TO}	r_T	T_{VJM}	R_{thJC}	R_{thCH}	Package
	V	A	°C	A	A	V/µs	V	mΩ	°C	K/W	K/W	
CLE20E1200PC	1200	20	115	31	160	500	0.92	24	150	0.7	0.25	TO-263ABHV
CME30E1600PZ	1600	30	105	47	280	500	0.96	25	150	0.5	0.25	TO-263ABHV
CLF20E1200PB	1200	20	110	31	150	500	0.96	26	150	0.7	0.50	TO-220AB
CLE30E1200PB	1200	30	115	47	270	500	0.92	14	150	0.5	0.50	TO-220AB
CNE60E2200TZ	2200	60	80	94	720	1000	1.90	12.6	150	0.3	0.15	TO-268AAHV
CLE90UH1200TLB	1200	90	90	–	350	500	0.92	13	150	0.9	0.40	SMPD-B

DO-15

L004
TO-252AA

L015
SOT-23

TO-225 (C77)

DO-214

L005a
TO-220AB

SMB-3L

X027a
SOT-227B miniBLOC

L001
SOT-223

L005c
TO-220AB (ISO)

SO-8

L002
TO-218AC

L006a
TO-92

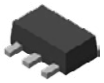
SOT-89

L002a
TO-218X

L011b
TO-263AB

TO-251AA

SCR

Littelfuse SCR products are half-wave, silicon-controlled rectifiers that represent the state of the art in design and performance. Because of its unidirectional switching capability, the SCR is used in circuits where high surge currents or latching actions are required. They may also be used for half-wave-type circuits where gate-controlled rectification action is required. Applications include crowbars in power supplies, camera flash units, smoke alarms, motor controls, battery chargers, and engine ignition.

Standard SCRs

Series Number	V_{DRM} V_{RRM}				$I_{T(RMS)}$	I_{GT} max	T_J	Package																
								Surface Mount							Through-hole									
	400	600	800	1000	A	mA	°C	SOT23	SO-8	SOT-89	SOT-223	DO-214-3L	TO-252	TO-263	TO-92-3L	TO-225 (C77)	TO-251	TO-225AA	TO-220 Iso	TO-220	TO-218AC Iso	TO-218AC	TO-218X Iso	TO-218X
NYC0102B (200V)	–	–	–	–	0.25	0.2	125	•	–	–	–	–	–	–	–	–	–	–	–	–	–	–	–	–
S8X5ECSx	–	–	•	–	0.5	0.05, 0.1	125	–	–	–	–	–	–	–	•	–	–	–	–	–	–	–	–	–
SxX8BBSx	–	•	–	–	0.8	0.2,0.45	125	•	–	–	–	–	–	–	–	–	–	–	–	–	–	–	–	–
SxX8xSx	•	•	•	–	0.8	0.005,0.05,0.2,0.45	125	–	–	•	•	–	–	–	•	–	–	–	–	–	–	–	–	–
EC103x/SxSx	•	•	–	–	0.8	0.012,0.05,0.2,0.5	110	–	–	–	–	•	–	–	•	–	–	–	–	–	–	–	–	–
Sx01E/SxN1	•	•	–	–	1	10	110	–	–	–	–	•	–	–	•	–	–	–	–	–	–	–	–	–
S802CSx	–	–	•	–	1.25	0.05,0.1	110	–	–	–	–	•	–	–	–	–	–	–	–	–	–	–	–	–
Sx02xSx	•	•	–	–	1.5	0.05,0.1,0.2	125	–	–	•	•	–	–	–	•	–	–	–	–	–	–	–	–	–
TCR22-x	•	•	–	–	1.5	0.2	110	–	–	–	–	•	–	–	•	–	–	–	–	–	–	–	–	–
S802xSx	–	–	•	–	1.5	0.1	125	–	–	–	•	–	–	–	•	–	–	–	–	–	–	–	–	–
STx802U2Sx	–	–	•	–	1.5	0.1	125	–	•	–	–	–	–	–	–	–	–	–	–	–	–	–	–	–
S6002xS	–	•	–	–	2	0.2	125	–	–	–	•	•	–	–	•	–	–	–	–	–	–	–	–	–
C106x,MCR106-x	•	•	–	–	4	0.2	125	–	–	–	–	–	–	–	–	•	–	–	–	–	–	–	–	–
Sxx04xSx	•	•	–	–	4	0.05,0.2	125	–	–	–	–	–	•	–	–	–	•	–	–	–	–	–	–	–
Sxx06xxx	•	•	•	•	6	0.2,0.5,15	125	–	–	–	–	–	•	•	–	–	•	–	•	•	–	–	–	–
Sxx08xxx	•	•	•	•	8	0.05,0.1,0.2,0.5,15	125	–	–	–	–	–	•	•	–	–	•	–	•	•	–	–	–	–
SRUK208x (1200V)	–	–	–	–	8	15	125	–	–	–	–	–	•	–	–	–	–	–	–	•	–	–	–	–
Sxx10xxx	•	•	•	•	10	0.2,0.5,15	125	–	–	–	–	–	•	•	–	–	•	–	•	•	–	–	–	–
Sxx12xx	•	•	•	•	12	20	125	–	–	–	–	–	•	•	–	–	•	–	•	•	–	–	–	–
MCR12DSx	–	•	•	–	12	0.2	110	–	–	–	–	–	•	–	–	–	•	–	–	–	–	–	–	–
Sxx16xx	•	•	•	•	16	30	125	–	–	–	–	–	–	•	–	–	–	–	•	•	–	–	–	–
Sxx20xx	•	•	•	•	20	30	125	–	–	–	–	–	–	–	–	–	–	–	•	–	–	–	–	–
Sxx25xx	•	•	•	•	25	35	125	–	–	–	–	–	–	•	–	–	–	–	•	•	–	–	–	–
Sxx35x	•	•	•	•	35	40	125	–	–	–	–	–	–	–	–	–	–	–	–	–	•	–	•	–
Sxx40x	•	•	•	•	40	40	125	–	–	–	–	–	–	•	–	–	–	–	–	•	–	–	–	–

©2023 Littelfuse, Inc

Standard SCRs

Series Number	V_{DRM} V_{RRM}				$I_{T(RMS)}$	I_{GT} max	T_J	Package																
								Surface Mount							Through-hole									
	400	600	800	1000	A	mA	°C	SOT23	SO-8	SOT-89	SOT-223	DO-214-3L	TO-252	TO-263	TO-92-3L	TO-225 (C77)	TO-251	TO-225AA	TO-220 Iso	TO-220	TO-218AC Iso	TO-218AC	TO-218X Iso	TO-218X
S4040xQx	•	–	–	–	40	35,45,60	125	–	–	–	–	–	–	•	–	–	–	–	–	•	–	–	–	–
Sxx55x	•	•	•	•	55	40	125	–	–	–	–	–	–	–	–	–	–	–	•	•	•	–	•	–
Sxx65x	•	•	•	•	65	50	125	–	–	–	–	–	–	–	–	–	–	–	–	–	•	–	•	–
Sxx70x	•	•	•	–	70	50	125	–	–	–	–	–	–	–	–	–	–	–	–	–	–	–	–	•

High Temperature SCRs

Series Number	V_{DRM} V_{RRM}				$I_{T(RMS)}$	I_{GT} max	T_J	Package																
								Surface Mount							Through-hole									
	400	600	800	1000	A	mA	°C	SOT23	SO-8	SOT-89	SOT-223	DO-214-3L	TO-252	TO-263	TO-92-3L	TO-225 (C77)	TO-251	TO-225AA	TO-220 Iso	TO-220	TO-218AC Iso	TO-218AC	TO-218X Iso	TO-218X
SJxx04xSx	•	•	–	–	4	0.2	150	–	–	–	–	–	•	–	–	–	•	–	–	–	–	–	–	–
SJxx06xxx	•	•	–	–	6	0.2,6,15	150	–	–	–	–	–	•	–	–	–	•	–	–	–	–	–	–	–
SJxx08xxx	•	•	–	–	8	0.2,6,15	150	–	–	–	–	–	•	–	–	–	•	–	–	–	–	–	–	–
SJxx10xxx	•	•	–	–	10	0.2,6,15	150	–	–	–	–	–	•	–	–	–	•	–	–	–	–	–	–	–
SJxx12xx	•	•	–	–	12	6,10,20	150	–	–	–	–	–	•	–	–	–	•	–	•	•	–	–	–	–
SVxx12xx	•	•	•	–	12	6,10	150	–	–	–	–	–	•	•	–	–	–	–	•	•	–	–	–	–
SVxx12xxQ	•	•	–	–	12	6,10	150	–	–	–	–	–	–	•	–	–	–	–	•	•	–	–	–	–
SJxx16xx	•	•	–	–	16	6,10,30	150	–	–	–	–	–	–	•	–	–	–	–	•	•	–	–	–	–
SVxx16xx	–	•	–	–	16	6,10	150	–	–	–	–	–	•	•	–	–	–	–	•	•	–	–	–	–
SVxx16xxQ	•	•	–	–	16	6,10.	150	–	–	–	–	–	–	•	–	–	–	–	•	•	–	–	–	–
SJxx20xx	•	•	–	–	20	6,10,35	150	–	–	–	–	–	–	•	–	–	–	–	•	•	–	–	–	–
SVxx20xx	•	•	–	–	20	6,10	150	–	–	–	–	–	–	•	–	–	–	–	•	•	–	–	–	–
SVxx20xxQ	•	•	–	–	20	6,10	150	–	–	–	–	–	–	•	–	–	–	–	•	•	–	–	–	–
SJxx25xx	•	•	–	–	25	6,10,35	150	–	–	–	–	–	–	•	–	–	–	–	•	•	–	–	–	–
SVxx25xx	•	•	–	–	25	6,10	150	–	–	–	–	–	–	•	–	–	–	–	•	•	–	–	–	–
SVxx25xxQ	•	•	–	–	25	6,10	150	–	–	–	–	–	–	•	–	–	–	–	•	•	–	–	–	–
SJxx32xx	•	•	–	–	32	15,40	150	–	–	–	–	–	–	•	–	–	–	–	•	•	–	–	–	–
SJxx40xx	•	•	–	–	40	15,40	150	–	–	–	–	–	–	•	–	–	–	–	•	•	–	–	–	–
SV6050xx	–	•	–	–	50	15	150	–	–	–	–	–	–	•	–	–	–	–	–	•	–	–	–	–

Automotive Grade AECQ101 Qualified SCRs

Series Number	V_{DRM} V_{RRM}				$I_{T(RMS)}$	I_{GT} max	T_J	Package																
								Surface Mount							Through-hole									
	400	600	800	1000	A	mA	°C	SOT23	SO-8	SOT-89	SOT-223	DO-214-3L	TO-252	TO-263	TO-92-3L	TO-225 (C77)	TO-251	TO-225AA	TO-220 Iso	TO-220	TO-218AC Iso	TO-218AC	TO-218X Iso	TO-218X
S8016xAx	–	–	•	–	16	50	125	–	–	–	–	–	–	•	–	–	–	–	–	•	–	–	–	–
SJxx20xxA	•	•	–	–	20	6,10,35	150	–	–	–	–	–	–	•	–	–	–	–	•	•	–	–	–	–
SJxx25xxA	•	•	–	–	25	6,10,35	150	–	–	–	–	–	–	•	–	–	–	–	•	•	–	–	–	–
SJxx32xxA	•	•	–	–	32	15,40	150	–	–	–	–	–	–	•	–	–	–	–	•	•	–	–	–	–
SJxx40xxA	•	•	–	–	40	15,40	150	–	–	–	–	–	–	•	–	–	–	–	•	•	–	–	–	–
HS4040xAQx	•	–	–	–	40	35,45,65	150	–	–	–	–	–	–	•	–	–	–	–	–	•	–	–	–	–
SV6050xAx	–	•	–	–	50	15	150	–	–	–	–	–	–	•	–	–	–	–	–	•	–	–	–	–

DO-15

L004
TO-252AA

L015
SOT-23

TO-225 (C77)

DO-214

L005a
TO-220AB

SMB-3L

X027a
SOT-227B miniBLOC

L001
SOT-223

L005c
TO-220AB (ISO)

SO-8

L002
TO-218AC

L006a
TO-92

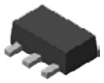
L016
SOT-89

L002a
TO-218X

L011b
TO-263AB

TO-251AA

TRIAC

Switching Thyristors are solid state switches that are normally open circuits (very high impedance), capable of withstanding rated blocking/off-state voltage until triggered to on state. Used for circuit control applications, Littelfuse offers Triac, QUADRAC® Semiconductors, SCRs, Rectifiers plus Alternistor Triacs for best commutating and noise immunity. Offered in various and other configurations for a wide range of currents blocking/off-state voltages, packages, and triggering.

TRIACs

Part Number	V_{DRM}	$I_{T(RMS)}$	@T_C	I_{TSM} 20 ms	I_{GT} QI-QII-QIII (-QIV)	T_J	Package
	V	A	°C	A	A	°C	
LX807MTRP	600	0.8	90	8	5-5-5-7	125	SOT-223
LX807MBRP	600	0.8	60	8	5-5-5-7	125	SOT-89
L0103NERP	800	1	50	10	3-3-3-5	125	TO-92
L0107NTRP	800	1	90	10	5-5-5-7	125	SOT-223
L0109NERP	800	1	50	10	10-10-10-10	125	TO-92
LJ6004D8RP	600	4	135	40	10-10-10-20	150	TO-252AA
QJ6004D4RP	600	4	135	40	25-25-25-50	150	TO-252AA
Q8004D4RP	800	4	110	46	25-25-25-50	125	TO-252AA
QJ6006DH4RP	600	6	130	60	35-35-35	150	TO-252AA
Q8006RH4TP	800	6	100	80	35-35-35	125	TO-220AB
QJ6008DH4RP	600	8	120	70	35-35-35	150	TO-252AA
Q8008LH4TP	800	8	90	83	35-35-35	125	TO-220AB (ISO)
Q6012LH1LEDTP	600	12	90	110	40461	125	TO-220AB (ISO)
QJ8012LH5TP	800	12	120	110	50-50-50	150	TO-220AB (ISO)
Q8015LTP	800	15	80	167	50-50-50-100	125	TO-220AB (ISO)
QJ6016NH2RP	600	16	130	167	40461	150	TO-263AB
QJ6016RH3TP	600	16	130	167	20-20-20	150	TO-220AB
QJ6016LH4TP	600	16	115	167	35-35-35	150	TO-220AB (ISO)
QJ6016NH6RP	600	16	130	167	80-80-80	150	TO-263AB
QJ8016NH4RP	800	16	132	167	35-35-35	150	TO-263AB
QJ8016LH6TP	800	16	110	167	80-80-80	150	TO-220AB (ISO)
QJ6025NH5RP	600	25	120	208	50-50-50	150	TO-263AB
QJ6025RH5TP	600	25	120	208	50-50-50	150	TO-220AB
QJ6025LH5TP	600	25	90	208	50-50-50	150	TO-220AB (ISO)
QJ6025KH6TP	600	25	110	208	80-80-80	150	TO-218AC
QJ8025LH5TP	800	25	90	208	50-50-50	150	TO-220AB (ISO)
Q8025K6TP	800	25	85	208	80-80-80	125	TO-218AC
QJ8025NH5RP	800	25	120	208	50-50-50	150	TO-263AB
QJ8030LH4TP	800	30	105	290	35-35-35	150	TO-220AB (ISO)
Q6035NH5RP	600	35	90	290	50-50-50	125	TO-263AB
Q8040K3TP	800	40	75	335	35-35-35-70	125	TO-218AC
QK040K4TP	1000	40	75	335	50-50-50-120	125	TO-218AC
Q8040K5TP	800	40	75	335	50-50-50	125	TO-218AC
QK040J7TP	1000	40	75	335	100-100-100	125	TO-218ACa
QJ8040KH5TP	800	40	100	420	50-50-50	150	TO-218AC

©2023 Littelfuse, Inc

TRIAC 1 Phase

I_{RMS} = 30–650 A

...MT...

Part Number	V_{RRM}	V_{vRMS}	I_{RMS}	@T_C	I_{TSM} 10 ms, 45 °C	V_{T0}	r_T	T_{VJM}	R_{thJC}	R_{thJH}	Package
	V	V	A	°C	A	V	mΩ	°C	K/W	K/W	
CLA30MT1200NPB	1200	400	33	120	170	0.89	30.5	150	0.95	1.45	TO-220AB
CLA30MT1200NPZ	1200	400	33	120	170	0.89	30.5	150	0.95	1.20	TO-263ABHV
CLA40MT1200NPB	1200	400	44	110	180	0.89	27.9	150	0.80	1.30	TO-220AB
CLA40MT1200NPZ	1200	400	44	110	180	0.89	27.9	150	0.80	1.05	TO-263ABHV
CLA40MT1200NHB	1200	400	44	110	180	0.89	27.9	150	0.80	1.05	TO-247AD
CLA60MT1200NHB	1200	400	66	120	380	0.86	12.5	150	0.55	0.80	TO-247AD
CLA60MT1200NTZ	1200	400	66	120	380	0.86	12.5	150	0.55	0.70	TO-268AAHV
CLA60MT1200NHR	1200	400	66	100	380	0.86	12.5	150	0.90	1.15	ISO247™
CMA60MT1600NHB	1600	500	66	115	260	0.9	16.6	150	0.55	0.80	TO-247AD
CMA60MT1600NHR	1600	500	66	90	260	0.9	16.6	150	0.90	1.15	ISO247™
CLA80MT1200NHB	1200	400	88	120	480	0.85	9.2	150	0.40	0.65	TO-247AD
CLA80MT1200NHR	1200	400	88	100	480	0.85	9.2	150	0.65	0.90	ISO247™
CMA80MT1600NHB	1600	400	88	115	400	0.9	12	150	0.40	0.65	TO-247AD
CMA80MT1600NHR	1600	500	88	95	400	0.9	12	150	0.65	0.90	ISO247™
MCMA650MT1400NKD	1400	440	650	85	9600	0.81	0.68	140	0.12	0.04	Y1-2-Cu
MCMA650MT1800NKD	1800	575	650	400	9600	0.81	0.68	140	0.12	0.04	Y1-2-Cu

Standard TRIACs

Series Number	V_{DRM}				$I_{T(RMS)}$	T_J max	$I_{GT(QI)}$ max	Package															
								Surface Mount							Through-hole								
	400	600	800	1000	A	°C	mA	SOT23	SO-8	SOT-89	SOT-223	DO-214-3L	TO-252	TO-263	TO-92-3L	TO-225 (C77)	TO-251	TO-220 Iso	TO-220	TO-218AC Iso	TO-218AC	TO-218X Iso	TO-218X
LxX8Ex / LxXx/ QxX8Ex / QxXx	•	•	–	–	0.8	125	3,5,10,25	–	–	–	–	•	–	–	•	–	–	–	–	–	–	–	–
LX8	•	•	–	–	0.8	125	3,5	–	–	•	•	–	–	–	•	–	–	–	–	–	–	–	–
Lx01Ex / LxNx / Qx01Ex / QxNx	•	•	–	–	1	110	3,5,10,25	–	–	–	–	•	–	–	•	–	–	–	–	–	–	–	–
L01	•	•	•	–	1	125	3,5,10	–	–	–	•	–	–	–	•	–	–	–	–	–	–	–	–
T2322B (200V)	•	–	–	–	2.5	110	10	–	–	–	–	–	–	–	•	•	–	–	–	–	–	–	–
2N607xA/B	•	•	–	–	4	110	3,5	–	–	–	–	–	–	–	•	•	–	–	–	–	–	–	–
Lxx04xx / Qxx04xx	•	•	•	•	4	125	3,5,10,25	–	–	–	–	–	•	–	–	–	•	•	•	–	–	–	–
Lxx06xx / Qxx06xx / Qxx06xHx	•	•	•	•	6	125	5,10,25,35,50	–	–	–	–	–	•	•	–	–	•	•	•	–	–	–	–
Lxx08xx / Qxx08xx / Qxx08xHx	•	•	•	•	8	125	5,10,25,35,50	–	–	–	–	–	•	•	–	–	•	•	•	–	–	–	–
Q6008xH1LED	•	•	–	–	8	125	10	–	–	–	–	–	–	•	–	–	–	•	•	–	–	–	–
Qxx10xx / Qxx10xHx	•	•	•	•	10	125	5,25,50	–	–	–	–	–	–	•	–	–	–	•	•	–	–	–	–
Qxx12xHx	•	•	•	•	12	125	10,50	–	–	–	–	–	–	•	–	–	–	•	•	–	–	–	–
Q6012xH1LED	•	•	–	–	12	125	10	–	–	–	–	–	–	•	–	–	–	•	•	–	–	–	–
Qxx15xx / Qxx16xHx	•	•	•	•	15	125	10,25,35,50,80	–	–	–	–	–	–	•	–	–	–	•	•	–	–	–	–
Q6016LH1LED	–	•	–	–	16	125	5	–	–	–	–	–	–	–	–	–	–	•	–	–	–	–	–
Qxx25xx / Qxx25xHx	•	•	•	•	25	125	50,80	–	–	–	–	–	–	•	–	–	–	•	•	•	–	•	–
Qxx30xHx / Qxx35xHx	•	•	–	–	30	125	25,50	–	–	–	–	–	–	•	–	–	–	•	•	–	–	–	–
Qxx40xx	•	•	•	•	40	125	35,50,80,100	–	–	–	–	–	–	–	–	–	–	–	–	•	•	•	–
MS0690J-D1TE (SOT-227)	–	•	–	–	90	125	50	–	–	–	–	–	–	–	–	–	–	–	–	–	–	–	–

High Temperature TRIACs

Series Number	V_{DRM}				$I_{T(RMS)}$	T_J max	$I_{GT(QI)}$ max	Package															
								Surface Mount							Through-hole								
	400	600	800	1000	A	°C	mA	SOT23	SO-8	SOT-89	SOT-223	DO-214-3L	TO-252	TO-263	TO-92-3L	TO-225 (C77)	TO-251	TO-220 Iso	TO-220	TO-218AC Iso	TO-218AC	TO-218X Iso	TO-218X
LJxx04xx / QJxx04xx	•	•	–	–	4	150	10,25	–	–	–	–	–	•	–	–	–	•	–	–	–	–	–	–
LJxx06xx / QJxx06xHx/QJxx06xx	•	•	•	–	6	150	10,20,35,50	–	–	–	–	–	•	•	–	–	•	•	•	–	–	–	–
LJxx08xx / QJxx08xHx /QJxx08xx	•	•	•	–	8	150	10,20,35,50	–	–	–	–	–	•	•	–	–	•	•	•	–	–	–	–
QJxx10xx / QJxx10xHx	–	–	•	–	10	150	10,25,35,50	–	–	–	–	–	–	•	–	–	–	•	•	–	–	–	–
QJxx12xHx	–	–	•	–	12	150	35,50	–	–	–	–	–	–	•	–	–	–	•	•	–	–	–	–
QVxx12xHx	–	•	–	–	12	150	35,50	–	–	–	–	–	–	•	–	–	–	•	•	–	–	–	–
QJxx16xHx	–	•	•	–	16	150	10,20,35,50,80	–	–	–	–	–	–	•	–	–	–	•	•	–	–	–	–
QVxx16xHx	–	•	–	–	16	150	10,20,35,50	–	–	–	–	–	–	•	–	–	–	•	•	–	–	–	–
HQ6025xH5	–	•	–	–	25	150	50	–	–	–	–	–	–	•	–	–	–	•	•	•	–	–	–
QJxx25xHx	•	•	•	–	25	150	35,50,80	–	–	–	–	–	–	•	–	–	–	•	•	•	–	•	–
QJxx30LH4 / QJxx35xHx	–	•	•	–	30	150	35	–	–	–	–	–	–	•	–	–	–	•	•	–	–	–	–
QJxx40xx	–	•	•	–	40	150	35,50,80,100	–	–	–	–	–	–	–	–	–	–	–	–	•	–	•	–

Quadrac

Series Number	V_{DRM}				$I_{T(RMS)}$	T_J max	V_{BO} max	I_H max	Package
	400	600	800	1000	A	°C	V	mA	
Qxx04LT	•	•	–	–	4	125	43	40	TO-220 Iso
Qxx06LT / Qxx06LTH	•	•	–	–	6	125	43	50	TO-220 Iso
Qxx08LT / Qxx08LTH	•	•	–	–	8	125	43	60	TO-220 Iso
Qxx10LT / Qxx10LTH	•	•	–	–	10	125	43	60	TO-220 Iso
Qxx15LT / Qxx15LTH	•	•	–	–	15	125	43	70	TO-220 Iso
Q6008LTH1LED	–	•	–	–	8	125	43	6	TO-220 Iso
Q6012LTH1LED	–	•	–	–	12	125	43	8	TO-220 Iso

SIDAC

Part Number	SIDAC Type	Nomial VBO																I_{TRM} @ 5 Hz	I_{TRM} @ 60 Hz	T_J Max	Package			
		82	90	105	110	120	130	140	150	180	200	220	230	240	250	300	360				SMA	SMB	DO-15	TO-92-2L
		V																A	A	°C				
Kxxx0yU	Unidirectional	•	•	•	•	•	•	•	•	•	•	•	•	•	•	–	–	160 / 280	80 / 120	125 / 150	•	–	•	–
Kxxxzy	Bidirectional	–	•	•	•	•	•	•	•	•	•	•	–	•	•	•	–	160	80	125	–	•	•	•
Kxxx0yH	Bidirectional	–	–	–	–	–	–	–	–	–	•	•	–	•	•	•	–	280	120	125	–	•	•	•
Kxxx1GL	Multipulse	–	–	–	–	–	–	–	–	–	–	•	–	•	•	–	•	n/a	n/a	125	–	–	•	–
K2xx0yHU	Unidirectional	–	–	–	–	–	–	–	–	–	•	•	–	•	•	–	–	280	120	125	–	•	•	–
Kxxx1G	Multipulse	–	–	–	–	–	–	–	–	–	–	•	–	•	•	–	•	n/a	n/a	125	–	–	•	–

©2023 Littelfuse, Inc

One of the essential advantages of power semiconductor modules has over discrete designs is the electrical isolation between the baseplates of the module and the parts subject to voltage (3.6 - 4.8 kV_{RMS} tested). This makes the mount-down of any number of the same or different modules on a common heatsink possible. It is feasible to use standard housings with appropriate accessories for designing a compact power converter operating from AC mains up to 690 V.

Plastic Housing with DCB Substrate

IXYS has succeeded in simplifying the conventional multilayer module construction by applying the direct copper bonding (DCB) technique.

Other features include:

- Top-side electrical terminals with captured nuts;
- Series-connected diodes/diode, thyristor/diode, and thyristor/thyristor modules; and
- Easy assembly

All thyristor modules with DCB ceramic base contacts are available in volume with two standardized twin plugs (2.8 mm × 0.8 mm) for gate and auxiliary cathode control terminals (version 1). Modules in TO-240 housing of version 8 are delivered with gate plugs only (i.e., without auxiliary cathode terminal; mounting srews available on request). The module housing is designed for adequate clearance and creepage distance, resulting in UL recognition by Underwriters Laboratories, Inc., USA for all types.

New Generation Silicon Chips

All chips are designed by applying separation diffusion processes such that the zones responsible for the surface field strength are located at the upper chip side. This results in the ability to solder the entire chip area onto the DCB ceramic substrate without a molybdenum strain buffer, which in turn leads to the effective stability of the chips as well as to large area heat dissipation if a load is applied. All zones at the edges decisive for blocking stability are coated with passivation glasses, the coefficient of expansion of which match that of silicon. Silicon chips have increasingly used planar technology with guard rings and channel stoppers to reduce electrical surface fields. This chip design supersedes the design of thyristor chips fabricated with passivation moats so that modules of the new series designed with the updated state-of-the-art use planar passivated chips processed by separation diffusion techniques. The contact areas of the chips possess physical vapor deposited metal layers. For the user, the improved properties are as follows:

- Excellent long-term stability of blocking currents and blocking voltages;
- Increased life time of the internal soldered connections; and
- High power cycling capability (> 50 000)

The thyristor/diode chips have been optimized in terms of their turn-off parameters: decreasing the carrier lifetime results in reduces stored charges QS, which in turn significantly reduces requirements for RC-snubbers for over-voltage protection. Cost reduction and improved efficiency are among the benefits of these characteristics. By redeveloping the silicon chips, improvements in the firing characteristics were achieved by specifying a higher "gate current not to fire" IGD, resulting in substantially less suscepibility to misfiring. This leads to improved safety of operation and higher equipment reliability.

Fig. 1: Principal Cross Section of an IXYS Module with DCB Technology

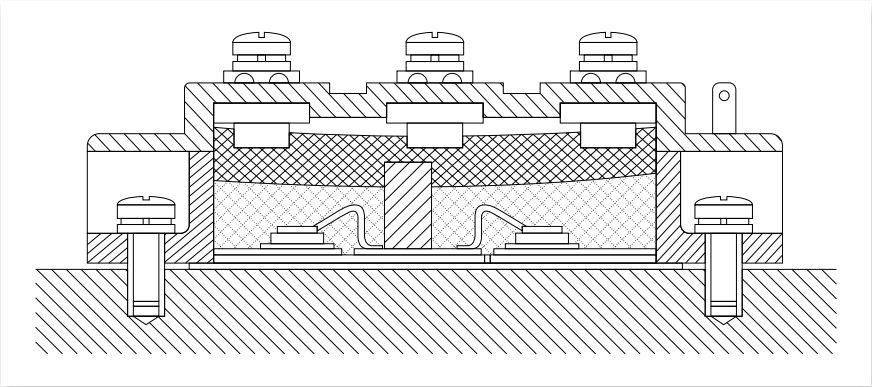

X125e
TO-240AA

X131c
Y1

X143a
SimBus A F PFP

X126c
Y4

X141c
SimBus A

Diodes Modules–Dual

I_{FAV} = 25–85 A

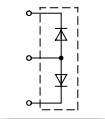

MDA

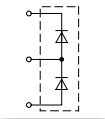

MDD...
MDM/NA...P...

Part Number	V_{RRM}	I_{FAV}	T_C	I_{FSM} 45 °C 10 ms	V_{F0}	r_F	T_{VJM}	R_{thJC}	R_{thCH}	Package
	V	A	°C	A	V	mΩ	°C	K/W	K/W	
MDMA25P1200TG	1200	25	100	320	0.85	11.10	150	1.10	0.20	TO-240AA (e)
MDMA25P1600TG	1600									
MDMA25P1800TG	1800	25	100	320	0.85	11.10	150	1.10	0.20	TO-240AA (e)
MDNA25P2200TG	2200									
MDD26-08N1B	800	36	100	650	0.80	6.10	150	1.00	0.20	To-240AA (e)
MDD26-12N1B	1200									
MDD26-14N1B	1400	36	100	650	0.80	6.10	150	1.00	0.20	TO-240AA (e)
MDD26-16N1B	1600									
MDD26-18N1B	1800									
MDMA35P1200TG	1200	35	100	500	0.83	7.30	150	0.90	0.20	TO-240AA (e)
MDMA35P1600TG	1600									
MDMA35P1800TG	1800	35	100	500	0.83	7.30	150	0.90	0.20	TO-240AA (e)
MDNA35P2200TG	2200									
MDD44-08N1B	800	59	100	1150	0.80	4.30	150	0.59	0.20	TO-240AA (e)
MDD44-12N1B	1200									
MDD44-14N1B	1400	59	100	1150	0.80	4.30	150	0.59	0.20	TO-240AA (e)
MDD44-16N1B	1600									
MDD44-18N1B	1800									
MDMA50P1200TG	1200	50	100	850	0.85	5.70	150	0.65	0.20	TO-240AA (e)
MDMA50P1600TG	1600									
MDMA50P1800TG	1800	50	100	850	0.85	5.70	150	0.65	0.20	TO-240AA (e)
MDNA50P2200TG	2200									
MDD56-08N1B	800	71	100	1400	0.80	3.00	150	0.51	0.20	TO-240AA (e)
MDD56-12N1B	1200									
MDD56-14N1B	1400	71	100	1400	0.80	3.00	150	0.51	0.20	TO-240AA (e)
MDD56-16N1B	1600									
MDD56-18N1B	1800									
MDMA65P1200TG	1200	65	100	1100	0.81	4.30	150	0.50	0.20	TO-240AA (e)
MDMA65P1600TG	1600									
MDMA65P1800TG	1800	65	100	1100	0.81	4.30	150	0.50	0.20	TO-240AA (e)
MDNA65P2200TG	2200									
MDMA85P1200TG	1200	85	100	1500	0.79	3.50	150	0.35	0.20	TO-240AA (e)
MDMA85P1600TG	1600									
MDMA85P1800TG	1800	85	100	1500	0.79	3.50	150	0.35	0.20	TO-240AA (e)
MDNA85P2200TG	2200									

©2023 Littelfuse, Inc

Diodes Modules–Dual

I_{FAV} = 99–300 A

Part Number	V_{RRM}	I_{FAV}	T_C	I_{FSM} 45 °C 10 ms	V_{F0}	r_F	T_{VJM}	R_{thJC}	R_{thCH}	Package
	V	A	°C	A	V	mΩ	°C	K/W	K/W	
MDD72-08N1B	800	99	100	1700	0.80	2.30	150	0.35	0.20	TO-240AA (e)
MDD72-12N1B	1200									
MDD72-14N1B	1400	99	100	1700	0.80	2.30	150	0.35	0.20	TO-240AA (e)
MDD72-16N1B	1600									
MDD72-18N1B	1800									
MDMA110P1200TG	1200	110	100	2000	0.82	2.80	150	0.3	0.20	TO-240AA (e)
MDMA110P1600TG	1600									
MDMA110P1800TG	1800	110	100	2000	0.82	2.80	150	0.3	0.20	TO-240AA (e)
MDNA110P2200TG	2200									
MDD95-08N1B	800	120	100	2800	0.75	1.95	150	0.26	0.20	TO-240AA (e)
MDD95-12N1B	1200									
MDD95-14N1B	1400	120	100	2800	0.75	1.95	150	0.26	0.20	TO-240AA (e)
MDD95-16N1B	1600									
MDD95-18N1B	1800	120	100	2800	0.75	1.95	150	0.26	0.20	TO-240AA (e)
MDD95-20N1B	2000									
MDD95-22N1B	2200	120	100	2800	0.75	1.95	150	0.26	0.20	TO-240AA (e)
MDA95-22N1B	2200									
MDMA140P1200TG	1200	140	100	2800	0.78	2.20	150	0.23	0.20	TO-240AA (e)
MDMA140P1600TG	1600									
MDMA140P1800TG	1800	140	100	2800	0.78	2.20	150	0.23	0.20	TO-240AA (e)
MDNA140P2200TG	2200									
MDD142-08N1	800	165	100	4700	0.80	1.30	150	0.21	0.10	Y4
MDD142-12N1	1200									
MDD142-14N1	1400	165	100	4700	0.80	1.30	150	0.21	0.10	Y4
MDD142-16N1	1600									
MDD142-18N1	1800									
MDMA180P1600YD	1600	180	100	4400	0.77	1.40	150	0.2	0.11	Y4
MDNA180P2200YD	2200									
MDD172-08N1	800	190	100	6600	0.80	0.80	150	0.21	0.10	Y4
MDD172-12N1	1200									
MDD172-14N1	1400	190	100	6600	0.80	0.80	150	0.21	0.10	Y4
MDD172-16N1	1600									
MDD172-18N1	1800									
MDMA210P1600YD	1600	210	100	6600	0.67	1.20	150	0.17	0.09	Y4
MDNA210P2200YD	2200									
MDD200-14N1	1400	224	100	10500	0.8	0.60	150	0.13	0.10	Y4
MDD200-16N1	1600									
MDD200-18N1	1800	224	100	10500	0.8	0.60	150	0.13	0.10	Y4
MDD200-22N1	2200									
MDMA200P1600SA	1600	200	110	6000	0.76	1.40	150	0.15	0.08	SimBus A
MDD175-28N1	2800	240	100	8500	0.74	1.27	150	0.14	0.04	Y1
MDD175-34N1	3400									
MDD255-12N1	1200	270	100	9500	0.80	0.60	150	0.14	0.04	Y1
MDD255-14N1	1400									
MDD255-16N1	1600	270	100	9500	0.80	0.60	150	0.14	0.04	Y1
MDD255-18N1	1800									
MDD255-20N1	2000	270	100	9500	0.80	0.60	150	0.14	0.04	Y1
MDD255-22N1	2200									
MDMA280P1600YD	1600	280	100	10500	0.74	1.00	150	0.13	0.06	Y4
MDNA280P2200YD	2200									
MDMA300P1600PTSF	1600	300	100	8000	0.78	1.30	150	0.1	0.05	SimBus F PFP
MDNA300P2200PTSF	2200									

X027a
SOT-227B miniBLOC

X125b
TO-240AA

X125d
TO-240AA

X129c
Y2

X131c
Y1

X132b
Y1

X142c
ComPack

X143a
SimBus A F PFP

Diode Modules – Single and Dual

I_{FAV} = 350–700 A

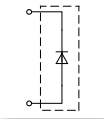

MDO

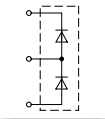

MDD...
MDM/NA...P...

Part Number	V_{RRM}	I_{FAV}	T_C	I_{FSM} 45 °C 10 ms	V_{F0}	r_F	T_{VJM}	R_{thJC}	R_{thCH}	Package
	V	A	°C	A	V	mΩ	°C	K/W	K/W	
FPO										
MDD310-12N1	1200	305	100	11500	0.75	0.63	150	0.129	0.04	Y2
MDD310-14N1	1400									
MDD310-16N1	1600	305	100	11500	0.75	0.63	150	0.129	0.04	Y2
MDD310-18N1	1800									
MDD310-20N1	2000	305	100	11500	0.75	0.63	150	0.129	0.04	Y2
MDD310-22N1	2200									
MDD312-12N1	1200	310	100	10500	0.80	0.60	150	0.12	0.04	Y1
MDD312-14N1	1400									
MDD312-16N1	1600	310	100	10500	0.80	0.60	150	0.12	0.04	Y1
MDD312-18N1	1800									
MDD312-20N1	2000	310	100	10500	0.80	0.60	150	0.12	0.04	Y1
MDD312-22N1	2200									
MDMA380P1600KC	1600	380	100	11000	0.75	0.53	150	0.11	0.04	Y1
MDMA380P1800KC	1800									
MDNA380P2200KC	2200									
MDMA425P1600PTSF	1600	425	100	10000	0.77	1.01	150	0.07	0.04	SimBus F PFP
MDNA425P2200PTSF	2200									
MDO500-12N1	1200	560	85	15000	0.80	0.38	140	0.072	0.02	Y1
MDO500-14N1	1400									
MDO500-16N1	1600	560	85	15000	0.80	0.38	140	0.072	0.02	Y1
MDO500-18N1	1800									
MDO500-20N1	2000	560	85	15000	0.80	0.38	140	0.072	0.02	Y1
MDO500-22N1	2200									
MDMA600P1600PTSF	1600	600	100	15000	0.78	0.67	150	0.05	0.03	SimBus F PFP
MDNA600P2200PTSF	2200									
MDO600-16N1	1600	608	85	15000	0.76	0.32	140	0.072	0.02	Y1
MDMA700P1600CC	1600	700	100	20000	0.78	0.35	150	0.055	0.02	ComPack
MDMA700P1800CC	1800									
MDNA700P2200CC	2200									

©2023 Littelfuse, Inc

Thyristor/Diode Modules

I_{TAV} = 25–85 A

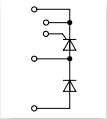

MCD...io1
MCM/NA...PD...

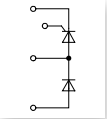

MCD...io8/...io6
CLA/CMA...PD...

Part Number	V_{RRM} V_{DRM}	I_{TAV}	T_C	$I_{T(RMS)}$	I_{TSM} 45 °C 10 ms	V_{T0}	r_T	T_{VJM}	R_{thJC}	R_{thCH}	Package
	V	A	°C	A	A	V	mΩ	°C	K/W	K/W	
MCMA25PD1200TB	1200	25	82	40	400	0.87	13.00	140	1.20	0.20	TO-240AA (b)
MCMA25PD1600TB	1600										
MCD26-08io1B	800	27	85	50	520	0.85	11.00	125	0.88	0.20	TO-240AA (b)
MCD26-12io1B	1200										
MCD26-14io1B	1400	27	85	50	520	0.85	11.00	125	0.88	0.20	TO-240AA (b)
MCD26-16io1B	1600										
MCD26-08io8B	800	27	85	50	520	0.85	11.00	125	0.88	0.20	TO-240AA (d)
MCD26-12io8B	1200										
MCD26-14io8B	1400	27	85	50	520	0.85	11.00	125	0.88	0.20	TO-240AA (d)
MCD26-16io8B	1600										
MCMA35PD1200TB	1200	35	85	55	520	0.87	9.80	140	0.90	0.20	TO-240AA (b)
MCMA35PD1600TB	1600										
MCD40-12io6	1200	40	85	63	500	0.87	10.50	150	0.70	0.10	SOT-227B miniBLOC
MCD40-16io6	1600										
MCD44-08io1B	800	49	85	77	1150	0.85	5.30	125	0.53	0.20	TO-240AA (b)
MCD44-12io1B	1200										
MCD44-14io1B	1400	49	85	77	1150	0.85	5.30	125	0.53	0.20	TO-240AA (b)
MCD44-16io1B	1200										
MCD44-18io1B	1600										
MCD44-08io8B	800	49	85	77	1150	0.85	5.30	125	0.53	0.20	TO-240AA (d)
MCD44-12io8B	1200										
MCD44-14io8B	1400	49	85	77	1150	0.85	5.30	125	0.53	0.20	TO-240AA (d)
MCD44-16io8B	1600										
MCD44-18io8B	1800										
MCNA40PD2200TB	2200	40	85	63	500	0.84	11.40	140	0.70	0.20	TO-240AA (b)
MCMA50PD1200TB	1200	50	85	79	800	0.89	5.30	140	0.70	0.20	TO-240AA (b)
MCMA50PD1600TB	1600										
CLA60PD1200NA	1200	60	100	94	1100	0.79	4.80	150	0.55	0.10	SOT-227B miniBLOC
MCD56-08io1B	800	60	85	100	1500	0.85	3.70	125	0.45	0.20	TO-240AA (b)
MCD56-12io1B	1200										
MCD56-14io1B	1400	60	85	100	1500	0.85	3.70	125	0.45	0.20	TO-240AA (b)
MCD56-16io1B	1600										
MCD56-18io1B	1800										
MCD56-08io8B	800	60	85	100	1500	0.85	3.70	125	0.45	0.20	TO-240AA (d)
MCD56-12io8B	1200										
MCD56-14io8B	1400	60	85	100	1500	0.85	3.70	125	0.45	0.20	TO-240AA (d)
MCD56-16io8B	1600										
MCD56-18io8B	1800										
MCNA55PD2200TB	2200	55	85	86	800	0.9	9.00	150	0.50	0.20	TO-240AA (b)
MCMA65PD1200TB	1200	65	85	105	1150	0.85	4.80	140	0.50	0.20	TO-240AA (b)
MCMA65PD1600TB	1600										
MCMA65PD1800TB	1800										
CMA80PD1600NA	1600	80	80	126	1070	0.86	5.50	150	0.45	0.10	SOT-227B miniBLOC
MCD72-08io1B	800	85	85	180	1700	0.85	3.20	125	0.30	0.20	TO-240AA (b)
MCD72-12io1B	1200										
MCD72-14io1B	1400	85	85	180	1700	0.85	3.20	125	0.30	0.20	TO-240AA (b)
MCD72-16io1B	1600										
MCD72-18io1B	1800										
MCD72-08io8B	800	85	85	180	1700	0.85	3.20	125	0.30	0.20	TO-240AA (d)
MCD72-12io8B	1200										
MCD72-14io8B	1400	85	85	180	1700	0.85	3.20	125	0.30	0.20	TO-240AA (d)
MCD72-16io8B	1600										
MCD72-18io8B	1800										

X125b
TO-240AA

X125d
TO-240AA

X125y
TO-240AA

X126b
Y4

X027a
SOT-227B miniBLOC

X129b
Y2

X132b
Y1

X141b
SimBus A

X142b
ComPack

X143a
SimBus A F PFP

Thyristor/Diode Modules

I_{TAV} = 85–140 A

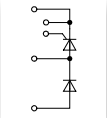
MCD...io1
MCM/NA...PD...

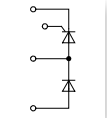
MCD...io8/...io6
CLA/CMA...PD...

Part Number	V_{RRM} V_{DRM}	I_{TAV}	T_C	$I_{T(RMS)}$	I_{TSM} 45 °C 10 ms	V_{T0}	r_T	T_{VJM}	R_{thJC}	R_{thCH}	Package
	V	A	°C	A	A	V	mΩ	°C	K/W	K/W	
MCNA75PD2200TB	2200	75	85	118	1050	0.90	6.50	140	0.38	0.20	TO-240AA (b)
MCMA85PD1200TB	1200	85	85	135	1500	0.85	3.90	140	0.38	0.20	TO-240AA (b)
MCMA85PD1600TB	1600										
MCMA85PD1800TB	1800										
CLA100PD1200NA	1200	100	85	150	1500	0.83	3.70	150	0.35	0.10	SOT-227B miniBLOC
MCD94-20io1B	2000	104	85	180	1700	0.85	3.20	125	0.22	0.20	TO-240AA (b)
MCD94-22io1B	2200										
MCD95-08io1B	800	116	85	180	2250	0.85	2.40	125	0.22	0.20	TO-240AA (b)
MCD95-12io1B	1200										
MCD95-14io1B	1400	116	85	180	2250	0.85	2.40	125	0.22	0.20	TO-240AA (b)
MCD95-16io1B	1600										
MCD95-18io1B	1800										
MCD95-16io1	1600	116	85	180	2250	0.85	2.40	125	0.22	0.20	TO-240AA (y)
MCD95-08io8B	800	116	85	180	2250	0.85	2.40	125	0.22	0.20	TO-240AA (d)
MCD95-12io8B	1200										
MCD95-14io8B	1400	116	85	180	2250	0.85	2.40	125	0.22	0.20	TO-240AA (d)
MCD95-16io8B	1600										
MCD95-18io8B	1800										
MCNA95PD2200TB	2200	95	85	149	1400	0.90	5.00	140	0.30	0.20	TO-240AA (b)
MCMA110PD1200TB	1200	110	85	170	1900	0.85	3.30	140	0.30	0.20	TO-240AA (b)
MCMA110PD1600TB	1600										
MCMA110PD1800TB	1800										
MCNA120PD2200TB	2200	120	85	190	1700	0.90	3.70	140	0.22	0.20	TO-240AA (b)
MCNA120PD2200TB-NI	2200	120	85	190	1700	0.90	3.70	140	0.22	0.20	TO-240AA (y)
MCD132-08io1	800	130	85	300	4750	0.80	1.50	125	0.23	0.10	Y4
MCD132-12io1	1200										
MCD132-14io1	1400	130	85	300	4750	0.80	1.50	125	0.23	0.10	Y4
MCD132-16io1	1600										
MCD132-18io1	1800										
MCMA140PD1200TB	1200	140	85	200	2400	0.85	2.80	140	0.22	0.20	TO-240AA (b)
MCMA140PD1600TB	1600										
MCMA140PD1800TB	1800										
MCMA140PD1600TB-NI	1600	140	85	200	2400	0.85	2.80	140	0.22	0.20	TO-240AA (y)

©2023 Littelfuse, Inc

Thyristor/Diode Modules

I_{TAV} = 180–700 A

Part Number	V_{RRM} V_{DRM}	I_{TAV}	T_C	$I_{T(RMS)}$	I_{TSM} 45 °C 10 ms	V_{T0}	r_T	T_{VJM}	R_{thJC}	R_{thCH}	Package
	V	A	°C	A	A	V	mΩ	°C	K/W	K/W	
MCNA150PD2200YB	2200	150	85	235	4300	0.86	2.10	140	0.210	0.11	Y4
MCD161-20io1	2000	165	85	300	6000	0.80	1.60	125	0.155	0.07	Y4
MCD161-22io1	2200										
MCD162-08io1	800	181	85	300	6000	0.88	1.15	125	0.155	0.07	Y4
MCD162-12io1	1200										
MCD162-14io1	1400	181	85	300	6000	0.88	1.15	125	0.155	0.07	Y4
MCD162-16io1	1600										
MCD162-18io1	1800										
MCNA180PD2200YB	2200	180	85	280	5400	0.85	1.80	140	0.170	0.09	Y4
MCMA200PD1600SA	1600	200	85	314	6000	0.81	1.60	140	0.150	0.08	SimBus A
MCD200-14io1	1400	216	85	340	8000	0.80	1.40	125	0.130	0.05	Y4
MCD200-16io1	1600										
MCD200-18io1	1800										
MCNA220PD2200YB	2200	220	85	345	7200	0.84	1.50	140	0.130	0.07	Y4
MCD224-20io1	2000	240	85	400	8000	0.80	0.76	130	0.139	0.04	Y1
MCD224-22io1	2200										
MCD225-12io1	1200	221	85	400	8000	0.80	0.76	130	0.157	0.04	Y1
MCD225-14io1	1400										
MCD225-16io1	1600	221	85	400	8000	0.80	0.76	130	0.157	0.04	Y1
MCD225-18io1	1800										
MCNA250PD2200PTSF	2200	250	85	400	5900	0.76	2.20	150	0.100	0.05	SimBUS F PFP
MCD255-12io1	1200	250	85	450	9000	0.80	0.68	130	0.140	0.04	Y1
MCD255-14io1	1400										
MCD255-16io1	1600	250	85	450	9000	0.80	0.68	130	0.140	0.04	Y1
MCD255-18io1	1800										
MCMA260PD1600YB	1600	260	85	408	8300	0.81	1.23	140	0.130	0.08	Y4
MCMA260PD1800YB	1800										
MCMA265PD1600KB	1600	260	85	408	8500	0.80	0.75	140	0.160	0.04	Y1
MCMA265PD1800KB	1800										
MCMA280PD1600PTSF	1600	280	85	440	7000	0.83	1.57	150	0.100	0.05	SimBUS F PFP
MCD310-08io1	800	320	85	500	9200	0.80	0.82	140	0.112	0.04	Y2
MCD310-12io1	1200										
MCD310-14io1	1400	320	85	500	9200	0.80	0.82	140	0.112	0.04	Y2
MCD310-16io1	1600										
MCD310-18io1	1800										
MCD310-20io1	2000	320	85	500	8000	0.80	0.82	140	0.112	0.04	Y2
MCD310-22io1	2200										
MCD312-12io1	1200	320	85	520	9200	0.80	0.68	140	0.120	0.04	Y1
MCD312-14io1	1400										
MCD312-16io1	1600	320	85	520	9200	0.80	0.68	140	0.120	0.04	Y1
MCD312-18io1	1800										
MCNA360PD2200PTSF	2200	360	85	570	8400	0.74	1.57	150	0.070	0.04	SimBUS F PFP
MCMA400PD1600PTSF	1600	400	85	630	10000	0.82	1.14	150	0.070	0.04	SimBUS F PFP
MCNA500PD2200PTSF	2200	500	85	790	11000	0.75	1.11	150	0.050	0.03	SimBUS F PFP
MCMA550PD1600PTSF	1600	550	85	864	13000	0.82	0.80	150	0.050	0.03	SimBUS F PFP
MCNA650PD2200CB	2200	650	85	1020	16000	0.75	0.63	140	0.045	0.02	ComPack
MCMA700PD1600CB	1600	700	85	1100	19000	0.82	0.40	140	0.050	0.02	ComPack
MCMA700PD1800CB	1800										

X103
V1-A-Pack

X125c
TO-240AA

X126a
Y4

X125a
TO-240AA

X125z
TO-240AA

Thyristor Modules – Dual

I_{TAV} = 18 – 60 A

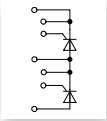

MCC...io1B
MCM/NA...P..

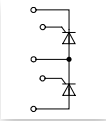

MCC...io8B

Part Number	V_{RRM} V_{DRM}	I_{TAV}	T_C	$I_{T(RMS)}$	I_{TSM} 45 °C 10 ms	V_{T0}	r_T	T_{VJM}	R_{thJC}	R_{thCH}	Package
	V	A	°C	A	A	V	mΩ	°C	K/W	K/W	
MCC19-08io1B	800	18	85	40	400	0.85	18	125	1.300	0.2	TO-240AA (a)
MCC19-12io1B	1200										
MCC19-14io1B	1400	18	85	40	400	0.85	18	125	1.300	0.2	TO-240AA (a)
MCC19-16io1B	1600										
MCC19-08io8B	800	18	85	40	400	0.85	18	125	1.300	0.2	TO-240AA (c)
MCC19-12io8B	1200										
MCC19-14io8B	1400	18	85	40	400	0.85	18	125	1.300	0.2	TO-240AA (c)
MCC19-16io8B	1600										
MCC21-08io8B	800	21	85	33	320	0.85	15	125	1.100	0.2	TO-240AA (c)
MCC21-12io8B	1200										
MCC21-14io8B	1400	21	85	33	320	0.85	15	125	1.100	0.2	TO-240AA (c)
MCC21-16io8B	1600										
MCMA25P1200TA	1200	25	85	40	400	0.87	13	140	1.200	0.2	TO-240AA (a)
MCMA25P1600TA	1600										
MCC26-08io1B	800	27	85	50	520	0.85	11	125	0.880	0.2	TO-240AA (a)
MCC26-12io1B	1200										
MCC26-14io1B	1400	27	85	50	520	0.85	11	125	0.880	0.2	TO-240AA (a)
MCC26-16io1B	1600										
MCC26-14io1	1400	27	85	50	520	0.85	11	125	0.880	0.2	TO-240AA (z)
MCC26-08io8B	800	27	85	50	520	0.85	11	125	0.880	0.2	TO-240AA (c)
MCC26-12io8B	1200										
MCC26-14io8B	1400	27	85	50	520	0.85	11	125	0.880	0.2	TO-240AA (c)
MCC26-16io8B	1600										
MCMA35P1200TA	1200	35	85	55	520	0.87	9.8	140	0.900	0.2	TO-240AA (a)
MCMA35P1600TA	1600										
MCNA40P2200TA	2200	40	85	63	500	0.84	11.4	140	0.700	0.2	TO-240AA (a)
MCC44-08io1B	800	49	85	77	1150	0.85	5.3	125	0.530	0.2	TO-240AA (a)
MCC44-12io1B	1200										
MCC44-14io1B	1400	49	85	77	1150	0.85	5.3	125	0.530	0.2	TO-240AA (a)
MCC44-16io1B	1600										
MCC44-18io1B	1800										
MCC44-08io8B	800	49	85	77	1150	0.85	5.3	125	0.530	0.2	TO-240AA (c)
MCC44-12io8B	1200										
MCC44-14io8B	1400	49	85	77	1150	0.85	5.3	125	0.530	0.2	TO-240AA (c)
MCC44-16io8B	1600										
MCC44-18io8B	1800										
MCMA50P1200TA	1200	50	85	79	800	0.89	5.3	140	0.700	0.2	TO-240AA (a)
MCMA50P1600TA	1600										
MCNA55P2200TA	2200	55	85	86	800	0.9	9	140	0.500	0.2	TO-240AA (a)
MCC56-08io1B	800	60	85	100	1500	0.85	3.7	125	0.450	0.2	TO-240AA (a)
MCC56-12io1B	1200										
MCC56-14io1B	1400	60	85	100	1500	0.85	3.7	125	0.450	0.2	TO-240AA (a)
MCC56-16io1B	1600										
MCC56-18io1B	1800										
MCC56-14io1	1400	60	85	100	1500	0.85	3.7	125	0.450	0.2	TO-240AA (z)

©2023 Littelfuse, Inc

Thyristor Modules – Dual

I_{TAV} = 60 – 181 A

MCC...io1B
MCM/NA...P..

MCC...io8B

Part Number	V_{RRM} V_{DRM}	I_{TAV}	T_C	$I_{T(RMS)}$	I_{TSM} 45 °C 10 ms	V_{T0}	r_T	T_{VJM}	R_{thJC}	R_{thCH}	Package
	V	A	°C	A	A	V	mΩ	°C	K/W	K/W	
MCC56-08io8B	800	60	85	100	1500	0.85	3.7	125	0.450	0.2	TO-240AA (c)
MCC56-12io8B	1200										
MCC56-14io8B	1400	60	85	100	1500	0.85	3.7	125	0.450	0.2	TO-240AA (c)
MCC56-16io8B	1600										
MCC56-18io8B	1800										
MCMA65P1200TA	1200	65	85	105	1150	0.85	4.8	140	0.500	0.2	TO-240AA (a)
MCMA65P1600TA	1600										
MCMA65P1800TA	1800										
MCC72-08io1B	800	85	85	180	1700	0.85	3.2	125	0.300	0.2	TO-240AA (a)
MCC72-12io1B	1200										
MCC72-14io1B	1400	85	85	180	1700	0.85	3.2	125	0.300	0.2	TO-240AA (a)
MCC72-16io1B	1600										
MCC72-18io1B	1800										
MCC72-08io8B	800	85	85	180	1700	0.85	3.2	125	0.300	0.2	TO-240AA (c)
MCC72-12io8B	1200										
MCC72-14io8B	1400	85	85	180	1700	0.85	3.2	125	0.300	0.2	TO-240AA (c)
MCC72-16io8B	1600										
MCC72-18io8B	1800										
MCNA75P2200TA	2200	75	85	118	1050	0.90	6.5	140	0.380	0.2	TO-240AA (a)
MCMA85P1200TA	1200	85	85	135	1500	0.85	3.9	140	0.380	0.2	TO-240AA (a)
MCMA85P1600TA	1600										
MCMA85P1800TA	1800										
MCC94-20io1B	2000	104	85	180	1700	0.85	3.2	125	0.220	0.2	TO-240AA (a)
MCC94-22io1B	2200										
MCC94-24io1B	2400										
MCC95-08io1B	800	116	85	180	2250	0.83	2.4	125	0.220	0.2	TO-240AA (a)
MCC95-12io1B	1200										
MCC95-14io1B	1400	116	85	180	2250	0.83	2.4	125	0.220	0.2	TO-240AA (a)
MCC95-16io1B	1600										
MCC95-18io1B	1800										
MCC95-14io1	1400	116	85	180	2250	0.83	2.4	125	0.220	0.2	TO-240AA (z)
MCC95-16io1	1600										
MCC95-08io8B	800	116	85	180	2250	0.85	2.4	125	0.220	0.2	TO-240AA (c)
MCC95-12io8B	1200										
MCC95-14io8B	1400	116	85	180	2250	0.85	2.4	125	0.220	0.2	TO-240AA (c)
MCC95-16io8B	1600										
MCC95-18io8B	1800										
MCNA95P2200TA	2200	95	85	149	1400	0.90	5	140	0.300	0.2	TO-240AA (a)
MCMA110P1200TA	1200	110	85	170	1900	0.85	3.3	140	0.300	0.2	TO-240AA (a)
MCMA110P1600TA	1600										
MCMA110P1800TA	1800										
MCMA110P1600VA	1600	110	85	170	1900	0.85	3.3	140	0.300	0.2	V1-A-Pack
MCNA120P2200TA	2200	120	85	190	1700	0.90	3.7	140	0.220	0.2	TO-240AA (a)
MCMA140P1200TA	1200	140	85	220	2400	0.85	2.8	140	0.220	0.2	TO-240AA (a)
MCMA140P1400TA	1400										
MCMA140P1600TA	1600	140	85	220	2400	0.85	2.8	140	0.220	0.2	TO-240AA (a)
MCMA140P1800TA	1800										
MCC132-08io1	800	130	85	300	4750	0.8	1.5	125	0.230	0.1	Y4
MCC132-12io1	1200										
MCC132-14io1	1400	130	85	300	4750	0.8	1.5	125	0.230	0.1	Y4
MCC132-16io1	1600										
MCC132-18io1	1800										
MCNA150P2200YA	2200	150	85	235	4300	0.86	2.1	140	0.210	0.11	Y4
MCMA160P1600YA	1600	160	85	250	4750	0.82	1.63	140	0.210	0.11	Y4
MCMA160P1800YA-MI	1800										
MCC161-20io1	2000	165	85	300	6000	0.80	1.6	125	0.155	0.07	Y4
MCC161-22io1	2200										
MCC162-08io1	800	181	85	300	6000	0.88	1.15	125	0.155	0.07	Y4
MCC162-12io1	1200										
MCC162-14io1	1400	181	85	300	6000	0.88	1.15	125	0.155	0.07	Y4
MCC162-16io1	1600										
MCC162-18io1	1800										

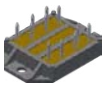
X102
ECO-PAC 2

X027a
SOT-227B miniBLOC

X141a
SimBus A

X126a
Y4

X131a
Y1

X142a
ComPack

X129a
Y2

X132a
Y1-2-Cu

X143a
SimBus A F PFP

Thyristor Modules – Dual

I_{TAV} = 180 – 700 A

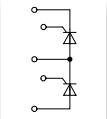
MCC...io8B

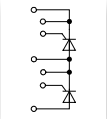
MCC...io1B
MCM/NA...P..

Part Number	V_{RRM} V_{DRM}	I_{TAV}	T_C	$I_{T(RMS)}$	I_{TSM} 45 °C 10 ms	V_{T0}	r_T	T_{VJM}	R_{thJC}	R_{thCH}	Package
	V	A	°C	A	A	V	mΩ	°C	K/W	K/W	
MCNA180P2200YA	2200	180	85	280	5400	0.85	1.8	140	0.170	0.09	Y4
MCMA200P1600SA	1600	200	90	314	6000	0.81	1.6	140	0.150	0.08	SimBus A
MCMA200P1600YA	1600	200	85	315	6000	0.83	1.43	140	0.170	0.09	Y4
MCMA200P1800YA-MI	1800										
MCC200-14io1	1400	216	85	340	8000	0.80	1.4	125	0.130	0.05	Y4
MCC200-16io1	1600										
MCC200-18io1	1800										
MCK200-18io1	1800	216	85	340	8000	0.80	1.4	125	0.130	0.05	Y4
MCNA220P2200YA	2200	220	85	345	7200	0.84	1.5	140	0.130	0.07	Y4
MCC224-20io1	2000	240	85	400	8000	0.80	0.76	130	0.139	0.04	Y1
MCC224-22io1	2200										
MCC224-24io1	2400										
MCC225-12io1	1200	221	85	400	8000	0.80	0.76	130	0.157	0.04	Y1
MCC225-14io1	1400										
MCC225-16io1	1600	221	85	400	8000	0.80	0.76	130	0.157	0.04	Y1
MCC225-18io1	1800										
MCNA250P2200PTSF	2200	250	85	400	5900	0.76	2.2	150	0.100	0.05	SimBus F PFP
MCC255-12io1	1200	250	85	450	9000	0.80	0.68	130	0.140	0.04	Y1
MCC255-14io1	1400										
MCC255-16io1	1600	250	85	450	9000	0.80	0.68	130	0.140	0.04	Y1
MCC255-18io1	1800										
MCMA260P1600YA	1600	260	85	408	8300	0.81	1.23	140	0.130	0.08	Y4
MCMA260P1800YA	1800										
MCMA265P1600KA	1600	260	85	408	8500	0.80	0.75	140	0.160	0.04	Y1
MCMA265P1800KA	1800										
MCMA280P1600PTSF	1600	280	85	440	7000	0.83	1.57	150	0.100	0.05	SimBus F PFP
MCC310-08io1	800	320	85	500	9200	0.80	0.82	140	0.112	0.04	Y2
MCC310-12io1	1200										
MCC310-14io1	1400	320	85	500	9200	0.80	0.82	140	0.112	0.04	Y2
MCC310-16io1	1600										
MCC310-18io1	1800										
MCC312-12io1	1200	320	85	520	9200	0.80	0.68	140	0.120	0.04	Y1
MCC312-14io1	1400										
MCC312-16io1	1600	320	85	520	9200	0.80	0.68	140	0.120	0.04	Y1
MCC312-18io1	1800										
MCNA360P2200PTSF	2200	360	85	570	8400	0.74	1.57	150	0.070	0.04	SimBus F PFP
MCMA400P1600PTSF	1600	400	85	630	10000	0.82	1.14	150	0.070	0.04	SimBus F PFP
MCNA500P2200PTSF	2200	500	85	790	11000	0.75	1.11	150	0.050	0.03	SimBus F PFP
MCMA550P1600PTSF	1600	550	85	860	13000	0.82	0.8	150	0.050	0.03	SimBus F PFP
MCNA650P2200CA	2200	650	85	1020	16000	0.75	0.63	140	0.045	0.02	ComPack
MCMA700P1600CA	1600	700	85	1100	19000	0.82	0.4	140	0.050	0.02	ComPack
MCMA700P1800CA	1800										
MCMA700P1600NCA	1600	700	85	1100	19000	0.82	0.4	140	0.050	0.02	ComPack
MCMA700P1800NCA	1800										

©2023 Littelfuse, Inc

Thyristor Modules – Single

I_{TAV} = 32 – 600 A

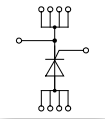

VCO...

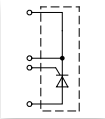

MCO

Part Number	V_{RRM} V_{DRM}	I_{TAV}	T_C	$I_{T(RMS)}$	I_{TSM} 45 °C 10 ms	V_{T0}	r_T	T_{VJM}	R_{thJC}	R_{thCH}	Package
	V	A	°C	A	A	V	mΩ	°C	K/W	K/W	
MCO25-12io1	1200	32	80	50	370	0.86	13.9	150	1.100	0.30	SOT-227B miniBLOC
MCO25-16io1	1600										
MCO50-12io1	1200	57	80	90	740	0.88	6.00	150	0.720	0.20	SOT-227B miniBLOC
MCO50-16io1	1600										
MCO75-12io1	1200	80	80	125	1070	0.85	5.50	150	0.450	0.10	SOT-227B miniBLOC
MCO75-16io1	1600										
MCO100-12io1	1200	101	80	160	1400	0.85	4.50	150	0.350	0.10	SOT-227B miniBLOC
MCO100-16io1	1600										
VCO132-12io7	1200	130	85	200	3600	0.80	1.65	150	0.250	0.10	ECO-PAC 2
VCO132-16io7	1600										
MCO150-12io1	1200	158	80	250	2000	0.84	3.50	150	0.200	0.10	SOT-227B miniBLOC
MCO150-16io1	1600										
VCO180-12io7	1200	180	90	280	4500	0.75	1.23	150	0.170	0.06	ECO-PAC 2
VCO180-16io7	1600										
MCO450-20io1	2000	464	85	750	15000	0.77	0.42	130	0.072	0.02	Y1-2-Cu
MCO450-22io1	2200										
MCO500-12io1	1200	560	85	880	17000	0.80	0.38	140	0.072	0.02	Y1-2-Cu
MCO500-14io1	1400										
MCO500-16io1	1600	560	85	880	17000	0.80	0.38	140	0.072	0.02	Y1-2-Cu
MCO500-18io1	1800										
MCO600-16io1	1600	600	85	940	15000	0.81	0.40	140	0.065	0.02	Y1-2-Cu
MCO600-18io1	1800										
MCO600-20io1	2000	600	85	940	15000	0.81	0.40	140	0.065	0.02	Y1-2-Cu
MCO600-22io1	2200										

Optional Accessories for Thyristor Diode Modules

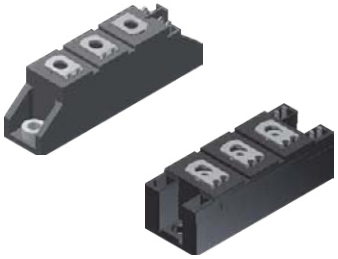

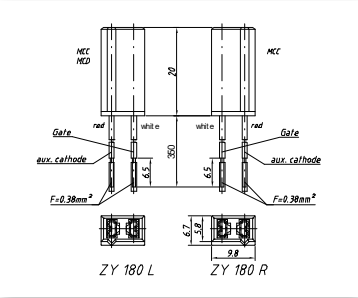

For module type Y1, Y2, Y4 and ComPACK MCC/MCD/MCO/MCMA/MCNA 132, 161 up to 700 (for MCD/MCO only Left-Type):

Keyed gate cathode twin plugs with wire length = 350/480 mm gate = white, cathode = red

Type ZY200Lx (L = left for pin pair 4/5)
Type ZY200Rx (R = right for pin pair 6/7)

Part Number	Description
ZY180L350	Left plug + cable – Length 350 mm
ZY180L480	Left plug + cable – length 480 mm
ZY180LM	Left plug only
ZY180R350	Right plug + cable – length 350 mm
ZY180R480	Right plug + cable – length 480 mm
ZY180RM	Right plug only

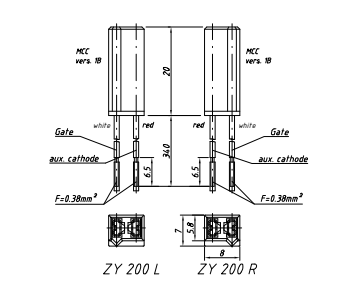

For module type TO-240 package MCC/MCD/CMA/MCNA 19 Up to 120 and 140 (version 1):

Keyed gate cathode twin plugs with wire length = 340/460 mm; gate = white, cathode = red

Type ZY200Lx (L = left for pin pair 4/5)
Type ZY200Rx (R = right for pin pair 6/7

Part Number	Description
ZY200L340	Left plug + cable – length 340 mm
ZY200L460	Left plug + cable – length 460 mm
ZY200LM	Left plug only
ZY200R340	Right plug + cable – length 340 mm
ZY200R460	Right plug + cable – length 460 mm
ZY200RM	Right plug only

For ZY180 and ZY200: UL 758 Style 3751

Design Information

For Thyristors, Diodes, Thyristor Diode Modules, and Rectifier Bridges

Surge current

The 60 Hz value of I_{TSM} is 10% higher than the 50 Hz value. The I_{TSM} value at T_{VJM} is 10% to 15% lower than the 45°C value.

Limiting I²t

50 Hz: I^2t [A^2s] = I_{TSM} [A] • I_{TSM} [A] • 0.005 [s]; use rated I_{TSM} value (10 ms). 60 Hz: I^2t [A^2s] = I_{TSM} [A] • I_{TSM} [A] • 0.0042 [s]; use 60-Hz-value of I_{TSM}.

Forward current

The average current ratings in tables are mostly specified for temperature conditions of T_A = 45°C, T_C = 85°C, or T_C = 100°C. For other temperature conditions, the current ratings can be calculated using the following formulas, which are applicable up to 400 Hz.

$$I_{TAV} = \frac{-V_{T0} + \sqrt{V_{T0}^2 + 4 \bullet k^2 \bullet r_T \bullet P}}{2 \bullet k2 \bullet r_T} \quad \text{where} \quad P = \frac{T_{VJM} - T_A}{R_{thJA}} \quad \text{or} \quad P = \frac{T_{VJM} - T_C}{R_{thJC}}$$

I_{TAV} [A], P [W]; V_{T0} [V]; r_T [W], T_{VJM} [°C], T_C [°C], T_A [°C], R_{thJC} [K/W], R_{thJA} [K/W]

$k^2 = 1$	for DC current
$k^2 = 2.5$	for sinusoidal half wave current
$k^2 = 3$	for 120° rectangular current
$k^2 = 6$	for 60° rectangular current

The average forward current is limited by the RMS current value $I_{T(RMS)}$. When the calculated value I_{TAV} is higher than $I_{T(RMS)}$ / k, replace it with $I_{TAV} = I_{T(RMS)}$ / k.

©2023 Littelfuse, Inc

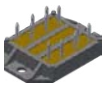

X101
ECO-PAC 1

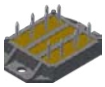

X102
ECO-PAC 2

X103
V1-A-Pack

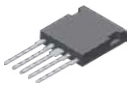

X024a
ISOPLUS i4-PAC™

X027a
SOT-227B miniBLOC

X030a
SMPD -B

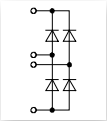

1-phase, B2U

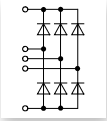

3-phase, B6U

Rectifier Bridges with Fast Diodes

Part Number	V_{RRM}	I_{dAV}	@T_C	I_{FSM} 45 °C 10 ms	V_{F0}	r_F	T_{VJM}	R_{thJC}	R_{thCH}	Package
	V	A	°C	A	V	mΩ	°C	K/W	K/W	
1-phase, B2U										
VBE17-06NO7	600	27	85	50	1.18	22.0	150	2.50	0.30	ECO-PAC 1
VBE17-12NO7	1200	19	85	40	1.32	30.0	150	2.50	0.30	ECO-PAC 1
VBE26-06NO7	600	44	85	110	1.13	13.0	150	1.60	0.30	ECO-PAC 1
VBE26-12NO7	1200	32	85	90	1.32	30.0	150	1.60	0.30	ECO-PAC 1
VBE55-06NO7	600	68	100	250	0.98	8.0	150	0.90	0.30	ECO-PAC 1
VBE55-12NO7	1200	59	85	200	1.31	15.0	150	0.90	0.30	ECO-PAC 1
VBE60-06A	600	60	100	250	0.98	8.20	150	1.15	0.10	SOT-227B miniBLOC
VBE60-12A	1200	60	70	200	1.31	14.0	150	1.15	0.10	SOT-227B miniBLOC
DHG40B1200LB	1200	34	80	150	1.35	42.0	175	1.50	0.50	SMPD-B
DPG60B600LB	600	60	100	250	0.85	17.0	175	1.10	0.40	SMPD-B
FBE22-06N1	600	22	115	50	1.04	24.0	175	3.00	0.20	ISOPLUS i4-PAC™
VBE100-06NO7	600	100	85	600	1.09	4.3.0	150	0.80	0.20	ECO-PAC 2
VBE100-12NO7	1200	100	70	500	1.07	8.20	150	0.80	0.20	ECO-PAC 2
DCG20B650LB *	650	21	80	250	0.74	118.0	175	2.10	0.70	SMPD-B
3-phase, B6U										
DHG60U1200LB	1200	60	80	200	1.35	2.90	150	1.20	0.40	SMPD-B
VUE50-12NO1	1200	50	85	200	1.65	18.20	150	1.20	0.30	V1-A-Pack
VUE22-06NO7	600	34	85	50	1.18	22.0	150	2.50	0.30	ECO-PAC 1
VUE22-12NO7	1200	24	85	40	1.39	55.0	150	2.50	0.30	ECO-PAC 1
VUE35-06NO7	600	56	85	110	1.13	13.0	150	1.60	0.30	ECO-PAC 1
VUE35-12NO7	1200	40	85	90	1.32	30.0	150	1.60	0.30	ECO-PAC 1
VUE75-06NO7	600	86	100	250	0.98	8.0	150	0.90	0.30	ECO-PAC 1
VUE75-12NO7	1200	74	85	200	1.31	15.0	150	0.90	0.30	ECO-PAC 1
FUE30-12N1	1200	30	120	90	0.97	48.0	175	2.30	0.20	ISOPLUS i4-PAC™
VUE130-06NO7	600	130	85	600	1.09	4.30	150	0.80	0.20	ECO-PAC 2
VUE130-12NO7	1200	130	70	500	1.07	8.20	150	0.80	0.20	ECO-PAC 2

* SiC-Diodes

Rectifier Bridges Incorporating Fast Diodes

Power-switching semiconductors are used in inverter systems with DC-Link. Due to high switching frequencies, harmonics and line distortion may be generated. It is important that new designs reduce these influences and fulfill the EMI filtering requirements according to EMI/EMC VDE 0871 and other standards.

Noise level can be reduced by up to 10dB when the input rectifier is equipped with semi-fast diodes and is therefore optimized for turn off, resulting in a lower peak recovery current compared to non-optimized and normal rectifier diodes. The noise level can be further reduced by another 5 dB when using rectifier bridges equipped with fast recovery epitaxial diodes (FRED) like module types VBE (single phase bridge) and VUE (three phase bridge). These are more expensive; however, they may be necessary in some applications to fulfill VDE and other standards.

This behavior has a direct influence on the design of the EMI filter networks with its capacitors and inductors, of which the size and costs can be reduced. More detailed information is available in the IXYS application note D98005E "Input Rectifiers with Semi-fast Diodes for DC Link" on www.ixys.com.

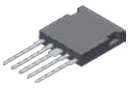
X024a
ISOPLUS i4-PAC™

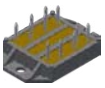
X101
ECO-PAC 1

X103
V1-A-Pack

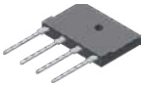
X025a
GBFP

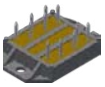
X102
ECO-PAC 2

X122b
PWS-D

X030a
SMPD -B

X116b
FO-B

X123e
PWS-E

X027a
SOT-227B miniBLOC

1 Phase Rectifier Bridges

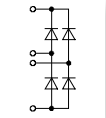
1-phase, B2U

Part Number	V_{RRM}	V_{vRMS}	I_{dAV}	@T_C	I_{FSM} 45 °C 10 ms	V_{F0}	r_F	T_{VJM}	R_{thJC}	R_{thJH}	P_{RSM}	Package
	V	V	A	°C	A	V	mΩ	°C	K/W	K/W	kW	
1 Phase Rectifier Bridges with Standard Diodes, B2U												
FBO16-12N	1200	400	20	130	150	0.81	32.00	175	3.00	3.20	–	ISOPLUS i4-PAC™
VBO21-08NO7	800	250	20	115	120	0.84	28.80	150	2.50	2.90	–	ECO-PAC 1
VBO21-12NO7	1200	400										
VBO22-08NO8	800	250	14	85	380	0.77	14.20	150	8.00	9.00	–	FO-B
VBO22-12NO8	1200	400										
VBO22-16NO8	1600	500	14	85	380	0.77	14.20	150	8.00	9.00	–	FO-B
VBO22-18NO8	1800	575										
GBO25-12NO1	1200	400	25	105	370	0.74	16.30	175	4.30	4.80	–	GBFP
GBO25-16NO1	1600	500										
VBO36-08NO8	800	250	18	85	550	0.76	9.10	150	7.00	8.00	–	FO-B
VBO36-12NO8	1200	400										
VBO36-16NO8	1600	500	18	85	550	0.76	9.10	150	7.00	8.00	–	FO-B
VBO36-18NO8	1800	575										
FBO40-12N	1200	400	40	130	300	0.79	14.00	175	1.50	1.70	–	ISOPLUS i4-PAC™
VBO40-08NO6	800	250	40	115	320	0.81	12.10	150	1.30	1.40	–	SOT-227B miniBLOC
VBO40-12NO6	1200	400										
VBO40-16NO6	1600	500										
VBO52-08NO7	800	250	60	115	550	0.78	8.10	150	1.10	1.50	–	PWS-D
VBO52-12NO7	1200	400										
VBO52-16NO7	1600	500	60	115	550	0.78	8.10	150	1.10	1.50	–	PWS-D
VBO52-18NO7	1800	575										
VBO54-08NO7	800	250	55	105	300	0.82	12.20	150	1.10	1.50	–	ECO-PAC 1
VBO54-12NO7	1200	400										
VBO54-16NO7	1600	500										
VBO68-08NO7	800	250	70	105	550	0.81	7.80	150	0.90	1.30	–	ECO-PAC 1
VBO68-12NO7	1200	400										
VBO68-16NO7	1600	500										
VBO72-08NO7	800	250	70	110	750	0.78	6.00	150	0.90	1.30	–	PWS-D
VBO72-12NO7	1200	400										
VBO72-16NO7	1600	500	70	110	750	0.78	6.00	150	0.90	1.30	–	PWS-D
VBO72-18NO7	1800	575										

©2023 Littelfuse, Inc

1 Phase Rectifier Bridges

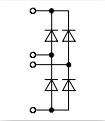

1-phase, B2U

Part Number	V_{RRM}	V_{vRMS}	I_{dAV}	@T_C	I_{FSM} 45 °C 10 ms	V_{F0}	r_F	T_{VJM}	R_{thJC}	R_{thJH}	Package
	V	V	A	°C	A	V	mΩ	°C	K/W	K/W	
1 Phase Rectifier Bridges with Standard Diodes, B2U											
VBO78-08NO7	800	250	80	115	750	0.81	5.9	150	0.70	1.00	ECO-PAC 2
VBO78-12NO7	1200	400									
VBO78-16NO7	1600	500									
VBO88-08NO7	800	250	90	115	1000	0.80	4.6	150	0.60	0.90	ECO-PAC 2
VBO88-12NO7	1200	400									
VBO88-16NO7	1600	500									
DLA100B800LB	800	400	124	80	400	0.75	4.2	175	1.00	1.45	SMPD-B
DLA100B1200LB	1200										
DMA120B800LB	800	250	130	90	500	0.88	6.4	175	0.80	1.30	
VBO130-08NO7	800	250	130	110	1800	0.77	3.4	150	0.50	0.70	PWS-E
VBO130-12NO7	1200	400									
VBO130-16NO7	1600	500	130	110	1800	0.77	3.4	150	0.50	0.70	PWS-E
VBO130-18NO7	1800	575									
VBO160-08NO7	800	250	160	110	2800	0.74	2.4	150	0.40	0.55	PWS-E
VBO160-12NO7	1200	400									
VBO160-16NO7	1600	500	160	110	2800	0.74	2.4	150	0.40	0.55	PWS-E
VBO160-18NO7	1800	575									

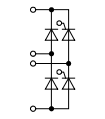

VGO...

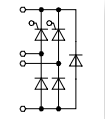

VHF

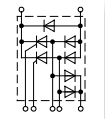

VHFD

Part Number	V_{RRM}	V_{vRMS}	I_{dAV}	@T_C	I_{FSM} 45 °C 10 ms	V_{T0}	r_T	T_{VJM}	R_{thJC}	R_{thJH}	Package
	V	V	A	°C	A	V	mΩ	°C	K/W	K/W	
1 Phase Half Controlled Rectifier Bridges with Freewheeling Diode, B2HKF											
VHF25-08io7	800	250	32	85	200	0.85	27	125	1.30	1.80	ECO-PAC 1
VHF25-12io7	1200	400									
VHFD37-08io1	800	250	36	85	320	0.85	13	125	1.20	1.55	V1-A-Pack
VHFD37-12io1	1200	400									
VHFD37-16io1	1600	500									
1 Phase Half Controlled Rectifier Bridge, B2HZ											
VGO36-16io7	1600	500	36	85	320	0.85	13	125	1.40	2.00	ECO-PAC 1

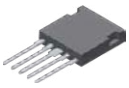
X024a
ISOPLUS i4-PAC™

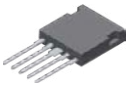
X025b
GUFP

X030a
SMPD -B

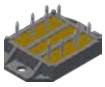
X101
ECO-PAC 1

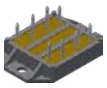
X102
ECO-PAC 2

X103
V1-A-Pack

X116b
FO-B

X122a
PWS-D

X122c
PWS-D Flat

X123c
PWS-E

3 Phase Rectifier Bridges

3 Phase Rectifier Bridges With Standard Diodes, B6U

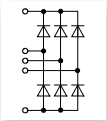
3-phase, B6U

Part Number	V_{RRM}	V_{vRMS}	I_{dAV}	@T_C	I_{FSM} 45 °C 10 ms	V_{F0}	r_F	T_{VJM}	R_{thJC}	R_{thJH}	Package
	V	V	A	°C	A	V	mΩ	°C	K/W	K/W	
FPO											
FUO22-12N	1200	400	30	120	150	0.81	31.0	175	3.00	3.20	ISOPLUS i4-PAC™
FUO22-16N	1600	500									
VUO25-08NO8	800	250	20	85	380	0.77	14.2	150	8.00	9.00	FO-B
VUO25-12NO8	1200	400									
VUO25-14NO8	1400	440	20	85	380	0.77	14.2	150	8.00	9.00	FO-B
VUO25-16NO8	1600	500									
VUO25-18NO8	1800	575									
VUO28-08NO7	800	250	30	105	120	0.84	28.8	150	2.50	2.90	ECO-PAC 1
VUO28-12NO7	1200	400									
VUO36-08NO8	800	250	27	85	550	0.76	9.1	150	7.00	8.00	FO-B
VUO36-12NO8	1200	400									
VUO36-14NO8	1400	440	27	85	550	0.76	9.1	150	7.00	8.00	FO-B
VUO36-16NO8	1600	500									
VUO36-18NO8	1800	575									
VUO34-08NO1	800	250	45	110	300	0.81	14.9	150	1.70	2.10	V1-A-Pack
VUO34-12NO1	1200	400									
VUO34-16NO1	1600	500	45	110	300	0.81	14.9	150	1.70	2.10	V1-A-Pack
VUO34-18NO1	1800	575									
GUO40-08NO1	800	250	40	90	370	0.74	16.3	175	4.30	4.80	GUFP
GUO40-12NO1	1200	400									
GUO40-16NO1	1600	500	40	90	370	0.74	16.3	175	4.30	4.80	GUFP
DMA40U1800GU	1800	575									
DNA40U2200GU	2200	690									
FUO50-16N	1600	500	50	120	270	0.78	17.0	175	2.10	2.30	ISOPLUS i4-PAC™
VUO52-08NO1	800	250	60	110	350	0.83	11.5	150	1.30	1.60	V1-A-Pack
VUO52-12NO1	1200	400									
VUO52-16NO1	1600	500	60	110	350	0.83	11.5	150	1.30	1.60	V1-A-Pack
VUO52-18NO1	1800	500									
VUO52-20NO1	2000	575	60	110	350	0.83	11.5	150	1.30	1.60	V1-A-Pack
VUO52-22NO1	2200	690									

©2023 Littelfuse, Inc

3 Phase Rectifier Bridges

3 Phase Rectifier Bridges With Standard Diodes, B6U

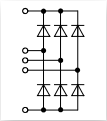

3-phase, B6U

Part Number	V_{RRM}	V_{vRMS}	I_{dAV}	@T_C	I_{FSM} 45 °C 10 ms	V_{F0}	r_F	T_{VJM}	R_{thJC}	R_{thJH}	Package
	V	V	A	°C	A	V	mΩ	°C	K/W	K/W	
VUO62-08NO7	800	250	60	120	550	0.78	8.1	150	1.10	1.50	PWS-D
VUO62-12NO7	1200	400									
VUO62-14NO7	1400	440	60	120	550	0.78	8.1	150	1.10	1.50	PWS-D
VUO62-16NO7	1600	500									
VUO62-18NO7	1800	575									
VUO64-16NO7	1600	500	60	120	550	0.78	8.1	150	1.10	1.50	PWS-D Flat
VUO68-08NO7	800	250	70	105	300	0.82	12.2	150	1.10	1.50	ECO-PAC 1
VUO68-12NO7	1200	400									
VUO68-16NO7	1600	500									
VUO80-08NO1	800	250	80	110	600	0.81	7.8	150	1.10	1.40	V1-A-Pack
VUO80-12NO1	1200	400									
VUO80-16NO1	1600	500	80	110	600	0.81	7.8	150	1.10	1.40	V1-A-Pack
VUO80-18NO1	1800	575									
VUO82-08NO7	800	250	90	115	750	0.78	6.0	150	0.90	1.30	PWS-D
VUO82-12NO7	1200	400									
VUO82-14NO7	1400	440	90	115	750	0.78	6.0	150	0.90	1.30	PWS-D
VUO82-16NO7	1600	500									
VUO82-18NO7	1800	575									
VUO84-16NO7	1600	500	90	115	750	0.78	6.0	150	0.90	1.30	PWS-D Flat
VUO86-08NO7	600	125	90	105	550	0.81	7.8	150	0.90	1.30	ECO-PAC 1
VUO86-12NO7	1200	400									
VUO86-16NO7	1600	500									
DMA90U1800LB	1800	575	90	110	350	0.81	12.7	175	1.10	1.50	SMPD-B
DNA90U2200LB	2200	690									
VUO98-08NO7	800	250	105	115	750	0.81	5.9	150	0.70	1.00	ECO-PAC 2
VUO98-12NO7	1200	400									
VUO98-16NO7	1600	500									
VUO105-18NO7	1800	575	120	105	1500	0.78	4.8	150	0.80	1.10	X121a
VUO110-08NO7	800	250	125	110	1200	0.79	4.5	150	0.70	1.00	PWS-E
VUO110-12NO7	1200	400									
VUO110-16NO7	1600	500	125	110	1200	0.79	4.5	150	0.70	1.00	PWS-E
VUO110-18NO7	1800	575									
MDMA120U1600VA	1600	500	120	110	850	0.79	5.9	150	0.65	0.85	V1-A-Pack
MDMA150U1600VA	1600	500	150	110	1100	0.83	4.7	150	0.50	0.70	V1-A-Pack
VUO121-16NO1	1600	500	120	105	700	0.80	7.6	150	0.65	0.75	E2-Pack
VUO122-08NO7	800	250	125	115	1000	0.80	4.6	150	0.60	0.90	ECO-PAC 2
VUO122-12NO7	1200	400									
VUO122-16NO7	1600	500									

X027a
SOT-227B miniBLOC

X112
E2-Pack

X123c
PWS-E

X103
V1-A-Pack

X112a
E2-Pack PFP

X123h
PWS-E Flat

X104
V2-Pack

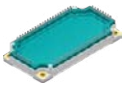

X113a
E3-Pack PFP

3 Phase Rectifier Bridges

3 Phase Rectifier Bridges With Standard Diodes, B6U

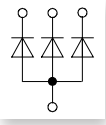

DM/NA...YA...

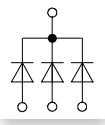

DM/NA...YC...

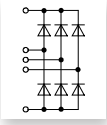

VUO..DM/NA..U..
MDM/NA..U..

Part Number	V_{RRM}	V_{vRMS}	I_{dAV}	@T_C	I_{FSM} 45 °C 10 ms	V_{F0}	r_F	T_{VJM}	R_{thJC}	R_{thJH}	Package
	V	V	A	°C	A	V	mΩ	°C	K/W	K/W	
DNA90YA2200NA	2200	690	90	85	370	0.86	11.4	150	1.20	1.30	SOT-227B miniBLOC
DNA90YC2200NA	2200	690									
DMA150YA1600NA	1600	500	150	95	700	0.82	6.3	150	0.60	0.70	SOT-227B miniBLOC
DMA150YC1600NA	1600	500									
DMA200YA1600NA	1600	500	200	100	1000	0.86	4.4	150	0.45	0.55	SOT-227B miniBLOC
DMA200YC1600NA	1600	500									
DMA240YA1600NA	1600	500	240	100	1300	0.86	4.0	150	0.35	0.45	SOT-227B miniBLOC
DMA240YC1600NA	1600	500									
VUO160-08NO7	800	250	175	110	1800	0.77	3.4	150	0.50	0.70	PWS-E
VUO160-12NO7	1200	400									
VUO160-16NO7	1600	500	175	110	1800	0.77	3.4	150	0.50	0.70	PWS-E
VUO160-18NO7	1800	575									
VUO162-16NO7	1600	500	175	110	1800	0.77	3.4	150	0.50	0.70	PWS-E FLat
VUO190-08NO7	800	250	240	110	2800	0.74	2.4	150	0.40	0.55	PWS-E
VUO190-12NO7	1200	400									
VUO190-16NO7	1600	500	240	110	2800	0.74	2.4	150	0.40	0.55	PWS-E
VUO190-18NO7	1800	575									
VUO192-16NO7	1600	500	240	110	2800	0.74	2.4	150	0.40	0.55	PWS-E FLat
MDNA240U2200ED	2200	690	240	90	1500	0.79	5.1	150	0.35	0.45	E2-Pack
MDMA450U1600PTEH	1600	450	500	85	2400	0.82	2.7	150	0.20	0.10	E3-Pack PFP
MDMA660U1600PTEH	1600	500	660	85	5000	0.77	1.8	150	0.15	0.08	E3-Pack PFP
MDNA660U2200PTEH	2200	690									
MDMA900U1600PTEH	1600	500	900	85	8000	0.76	1.4	150	0.10	0.05	E3-Pack PFP

©2023 Littelfuse, Inc

3 Phase Rectifier Bridges

3 Phase Rectifier Bridges With IGBT and Fast Diode for Brake Unit

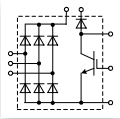

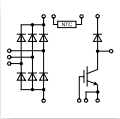

Part Number	Rectifier			IGBT		Fast Diode			Package
	V_{RRM}	I_{dAV}	@ T_C	V_{CES}	I_{C80}	V_{RRM}	$I_{F(AV)}$	t_{rr}	
	V	A	°C	V	A	V	A	ns	
VUB72-12NOXT	1200	75	110	1200	40	1200	21	130	V1-A-Pack
VUB72-16NOXT	1600								
VUI72-16NOXT	1600	75	110	1200	40	–	–	–	V1-A-Pack
VUB116-16NOXT	1600	120	105	1200	84	1200	32	150	E2-Pack
VUB120-16NOX	1600	180	90	1200	140	1200	32	300	V2-Pack
VUB120-16NOXT	1600								
VUB135-22NO1	2200	150	105	1700	80	1700	33	900	E2-Pack
VUB145-16NOXT	1600	150	105	1200	140	1200	32	300	E2-Pack
VUB160-16NOX	1600	180	90	1200	175	1200	32	150	V2-Pack
VUB160-16NOXT	1600								
MDMA210UB1600PTED	1600	210	85	1200	84	1200	59	350	E2-Pack PFP
MDNA210UB2200PTED	2200	210	85	1700	100	1700	54	550	E2-Pack PFP
MDNA210UB2200TED	2200	210	85	1700	100	1700	54	550	E2-Pack
MDMA240UB1600ED	1600	240	85	1200	140	1200	59	350	E2-Pack
MDMA280UB1600PTED	1600	280	85	1200	140	1200	59	350	E2-Pack PFP
MDNA280UB2200PTED	2200	280	85	1700	100	1700	54	550	E2-Pack PFP
MDMA360UB1600PTED	1600	360	85	1200	175	1200	90	350	E2-Pack PFP
MDNA360UB2200PTED	2200	360	85	1700	145	1700	83	550	E2-Pack PFP
MDMA450UB1600PTED	1600	450	85	1200	175	1200	90	350	E2-Pack PFP
MDMA450UB1600PTEH	1600	450	85	1200	175	1200	90	350	E3-Pack PFP

3 Phase Rectifier Bridges

With IGBT and Fast Diode for Brake Unit

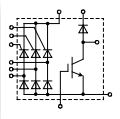

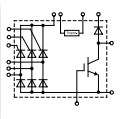

Part Number	Rectifier			IGBT		Fast Diode			Package
	V_{RRM}	I_{dAV}	@ T_C	V_{CES}	I_{C80}	V_{RRM}	$I_{F(AV)}$	t_{rr}	
	V	A	°C	V	A	V	A	ns	
VVZB120-16ioX	1600	180	85	1200	140	1200	32	300	V2-Pack
MCNA120UI2200TED	2200	117	80	1700	80	1700	50	550	E2-Pack
MCNA120UI2200PED	2200	120	80	1700	80	1700	50	550	E2-Pack PFP
VVZB135-16ioXT	1600	150	85	1200	84	1200	32	150	E2-Pack
VVZB170-16ioXT	1600	180	85	1200	140	1200	32	300	E2-Pack
MCMA240UI1600ED	1600	240	80	1200	140	1200	59	350	E2-Pack
MCMA240UI1600PED	1600	240	80	1200	140	1200	59	350	E2-Pack PFP
MCMA245UI1600ED	1600	240	80	1200	175	1200	90	350	E2-Pack

Rectifier Modules

X027a
SOT-227B miniBLOC

X030a
SMPD -B

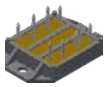
X101
ECO-PAC 1

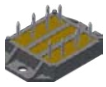
X102
ECO-PAC 2

X103
V1-A-Pack

X105a
V1-B-Pack

X105c
V1-B-Pack

X112
E2-Pack

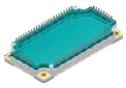
X113
E3-Pack

X123b
PWS-E

X251
UGE

X253
UGD

X253b
UGB

X254
VG-A

X255
VG-B

3 Phase Rectifier Bridges

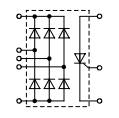
...UC...
VUC

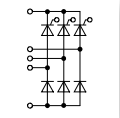
VVZ

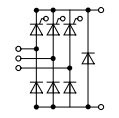
VVZF
...UJ...

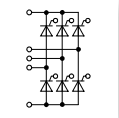
VTO

Part Number	V_{RRM}	V_{vRMS}	I_{dAVM}	@T_H	$I_{FSM/TSM}$ 10 ms, 45 °C		V_{T0}	r_T	T_{VJM}	R_{thJC}	R_{thJH}	Package
	V	V	A	°C	A		V	mΩ	°C	K/W	K/W	
3 Phase Rectifier Bridges with Standard or Fast Diodes (t_{rr} = 1.5 ms) & Integrated Softstart Thyristor												
VUC36-12go2	1200	400	34	85	Dio.	300	1.20	16	125	1.40	2.00	V1-B-Pack (a)
					Thy.	400	0.85	10	125	0.90	1.10	
VUC36-16go2	1600	500	34	85	Dio.	300	1.20	16	125	1.40	2.00	
					Thy.	400	0.85	10	125	0.90	1.10	
MDMA60UC1600VC	1600	500	60	110	Dio.	350	0.83	11.5	150	1.30	1.60	V1-B-Pack (c)
					Thy.	800	0.89	5.3	140	0.70	0.90	
MDMA360UC1600TED	1600	500	360	85	Dio.	1900	0.82	3.4	150	0.25	0.35	E2-Pack
					Thy.	2400	0.84	3.1		0.17	0.25	

Part Number	V_{RRM}	V_{vRMS}	I_{dAVM}	@T_H	$I_{FSM/TSM}$ 10 ms, 45 °C	V_{T0}	r_T	T_{VJM}	R_{thJC}	R_{thJH}	Package
	V	V	A	°C	A	V	mΩ	°C	K/W	K/W	
3 Phase Half-Controlled Rectifier Bridges, B6HK											
VVZ39-08ho7	800	250	39	85	200	0.85	27.0	125	1.30	1.80	ECO-PAC 1
VVZ39-12ho7	1200	400									
VVZ40-12io1	1200	400	34	100	320	0.85	15.0	125	1.00	1.60	V1-B-Pack (a)
VVZ40-16io1	1600	500									
CLE90UH1200TLB	1200	400	90	90	350	0.92	13.0	150	0.90	1.30	SMPD-B
VVZ110-12io7	1200	400	110	85	1150	0.85	6.0	125	0.65	0.80	PWS-E
VVZ175-12io7	1200	400	167	85	1500	0.85	3.5	125	0.46	0.55	PWS-E
VVZ175-16io7	1600	500									
MCMA450UH1600TEH	1600	500	450	90	2400	0.84	3.1	150	0.17	0.25	E3-Pack
3 Phase Half-Controlled Rectifier Bridges with Freewheeling Diodes,B6HKF											
MCMA120UJ1800ED	1800	575	117	80	500	0.89	13.6	150	0.65	0.75	E2-Pack
3 Phase Full-Controlled Rectifier Bridges, B6C											
VTO39-08ho7	800	250	39	85	200	0.85	27.0	125	1.30	1.80	ECO-PAC 1
VTO39-12ho7	1200	400									

©2023 Littelfuse, Inc

AC Controller–1, 2, & 3 Phase

I_{RMS} = 35–230 A

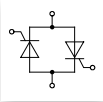

MMO/CLA...MB..

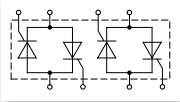

VW 2x..

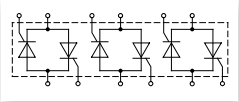

VWO

Part Number		V_{RRM}	V_{vRMS}	I_{RMS}	@T_C	I_{TSM} 10 ms, 45 °C	V_{T0}	r_T	T_{VJM}	R_{thJC}	R_{thJH}	Package
		V	V	A	°C	A	V	mΩ	°C	K/W	K/W	
1 Phase	MMO62-12io6	1200	400	66	95	400	0.87	13.6	150	0.90	1.10	SOT-227B miniBLOC
	MMO62-16io6	1600	500									
	MMO74-12io6	1200	400	88	95	600	0.87	10.5	150	0.70	0.80	SOT-227B miniBLOC
	MMO74-16io6	1600	500									
	MMO90-12io6	1200	400	110	95	800	0.88	6.0	150	0.60	0.70	SOT-227B miniBLOC
	MMO90-14io6	1400	440									
	MMO90-16io6	1600	500									
	CLA110MB1200NA	1200	400	110	110	1100	0.78	4.9	150	0.55	0.65	SOT-227B miniBLOC
	MMO110-12io7	1200	400	112	85	1000	0.85	5.6	150	0.80	0.92	ECO-PAC 1
	MMO110-14io7	1400	440									
	MMO140-12io7	1200	400	130	85	1150	0.85	5.2	150	0.70	0.82	ECO-PAC 1
	MMO140-16io7	1600	500									
	MMO175-12io7	1200	400	175	85	1500	0.85	3.7	150	0.50	0.62	ECO-PAC 1
	MMO175-16io7	1600	500									
	MMO230-12io7	1200	400	230	85	2250	0.8	2.4	125	0.26	0.46	ECO-PAC 2
	MMO230-16io7	1600	500									
2 Phase	VW2x60-12io1	1200	400	2 × 60	85	520	0.85	11.0	125	0.92	1.22	V1-A-Pack
	VW2x60-14io1	1400	440									
	VW2x60-16io1	1600	500									
3 Phase	VWO35-08ho7	800	250	3 × 35	85	200	0.85	27.0	125	1.30	1.80	ECO-PAC 1
	VWO35-12ho7	1200	400									

1 and 3 Phase High Voltage Rectifier Modules

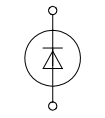

UGE

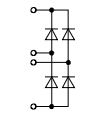

UGB

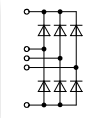

UGD

Part Number	V_{RRM}	I_{dAV} 1/2	I_{FSM} 10 ms, 45 °C	V_{F0}	r_F	T_{VJM}	R_{thJA1} 1	R_{thJA2} 2	Package
	V	V	A	V	mΩ	°C	K/W	K/W	
UGE0421AY4	3200	23 / 7.4	300	1.70	16	150	1.9	7.1	UGE
UGE0221AY4	4800	10 / 3.8	180	2.55	90	150	1.7	8.0	UGE
UGE1112AY4	8000	4.2 / 2.0	120	4.25	215	150	4.2	10.0	UGE
UGE3126AY4	24000	2.0 / 0.8	70	12.00	1800	150	2.7	8.7	UGE
UGB3132AD	4800	1.3	60	–	–	150	–	–	UGB
UGB6124AG	10500	1.0	50	–	–	150	–	–	UGB
UGD6123AG	7200	1.8	50	–	–	150	–	–	UGD
UGD8124AG	10500	1.2	50	–	–	150	–	–	UGD

1 for oil-cooling with cooling plate, T_A = 35 °C
2 for natural air cooling without cooling plate, T_A = 45 °C

Braking Rectifier Assemblies

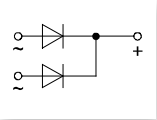

VGF 0136 AH

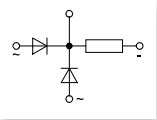

VGF 0136 AB

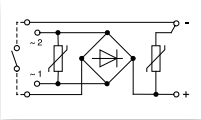

VGB 0124 AY7

Part Number	V_{vRMS} typ.	V_{dAV} typ.	I_{dAVM} typ.	I_{dAVM} max.	V_{RRM} max.	I_{FSM} max.	I^2t max.	Package
	V	V	A	A	V	A	A^2s	
VGB0124AY7a	380	340	1.0	1.0	1400	60	28	VG-A
VGF0136AB	1000	440	1.2	1.5	2800	80	40	VG-B

Solid State Relays

IXYS Integrated Circuits' line of solid state relays is one of the broadest in the industry. The devices use discrete semiconductor components and the patented OptoMOS® architecture to deliver fast, reliable, bounce-free switching in a compact design. Semiconductor relays are an ideal replacement for larger reed and electromechanical relays. Compared to these old electromagnetic technologies, our OptoMOS® relays offer significantly lower drive current, small package size, no susceptibility to magnetic interaction, and solid state reliability. All of these are key requirements for the design of today's complex, low-power, multi-channel products.

Features

- Low drive current
- High reliability
- No EMI/RFI generation
- Arc-free with no snubbing circuits
- AC or DC switching
- Current limiting devices available
- Low off-state leakage

Applications

- Telecommunications / data communications
- Instrumentation
- Multiplexers
- Data acquisition / electronic switching
- Meters (watt-hour, water, gas)
- Medical equipment (patient/ equipment isolation)
- Security
- Industrial controls

Output Configurations

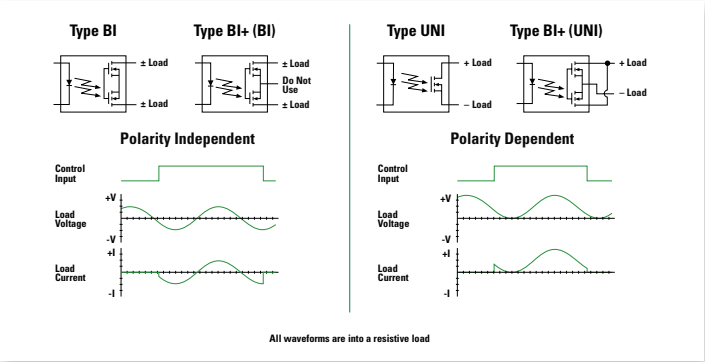

Type BI	relays conduct load current in both directions.
Type BI+	relays, in BI configuration, conduct load current in both directions.
Type UNI	relays conduct load current from the positive terminal to the negative terminals only
Type BI+	relays, in UNI configuration with output MOSFET wired in parallel, enable higher load current from positive terminal to negative terminal only.

The accompanying SSR tables reference these types (BI, BI+, & UNI) for all devices listed.

1-Form-A Relays: Single-Pole

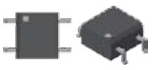
10
4-Pin SOP

21
8-Pin Flatpack

42
4-Pin DIP

12
6-Pin Surface Mount

22
8-Pin Surface Mount

43
4-Pin Surface Mount

14
6-Pin DIP

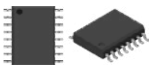
32
16-Pin SOIC

44
4-Pin V-DIP

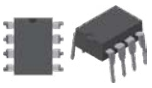
20
8-Pin DIP

36
Power SIP

62
6-Pin Flatpack (8-Pin Body)

©2023 Littelfuse, Inc

1-Form-A Relays: Single-Pole

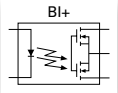

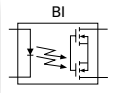

Part Number	Relay Type	Blocking Voltage	Load Current	On Resistance	Input Control Current	Switching Speeds t_{on}/t_{off}	Isolation Voltage	Off-State Leakage	Package Type
		V_P	mA	Ω	mA	ms	V_{rms}	µA	
CPC1006N	BI	60	75	10	0.5	10 / 10	1500	1	10
CPC1008N	BI	100	150	8	2	2 / 1	1500	1	10
CPC1009N	BI	100	150	8	2	2 / 0.5	1500	0.02	10
CPC1010N	BI	250	170	11.5	2	3 / 3	1500	1	10
CPC1014N	BI	60	400	2	2	2 / 1	1500	1	10
CPC1016N	BI	100	100	16	2	2 / 1	1500	1	10
CPC1017N	BI	60	100	16	1	10 / 10	1500	1	10
CPC1018N	BI	60	600	0.8	1	3 / 2	1500	1	10
CPC1019N	BI	60	750	0.6	2	3 / 3	1500	1	10
CPC1020N	BI	30	1200	0.25	2	3 / 3	1500	1	10
CPC1025N	BI	400	120	30	2	2 / 1	1500	1	10
CPC1030N	BI	350	120	30	2	2 / 1	1500	1	10
CPC1035N	BI	350	100	35	2	2 / 1	1500	1	10
CPC1225N	BI	400	120	30	2	2 / 1	1500	1	10
CPC1230N	BI	350	120	30	2	2 / 1	1500	1	10
CPC1330	BI	350	120	30	2	2 / 1	5000	1	42, 43
CPC1335	BI	350	100	35	1	10 / 10	3750	1	21
CPC1390	BI	400	140	22	2	1 / 1	5000	1	42, 43, 44
CPC1393	BI	600	90	50	2	5 / 5	5000	1	42, 43, 44
CPC1394	BI	600	120	35	2	5 / 3	5000	1	42, 43, 44
CPC1510	BI+	250	200	15	2	2 / 2	3750	1	12, 14
CPC1511	BI	230	450	4	2.5	4 / 2	3750	1	36
CPC1540	BI+	350	120	25	2	2 / 2	3750	1	12, 14
CPC1560	BI+	60	300	5.6	1.1	0.1 / 0.4	3750	1	20, 22
CPC1561B	BI	60	1000	0.245	2.5	2.5 / 0.5	3750	1	32
CPC1563	BI+	600	120	35	2	2 / 2	3750	1	12, 14
CPC1593	BI+	600	120	35	2	2 / 2	3750	1	12, 14
LCA100	BI+	350	120	25	5	5 / 5	3750	1	12, 14
LCA100L	BI+	350	120	25	5	5 / 5	3750	1	12, 14
LCA110	BI+	350	120	35	2	3 / 3	3750	1	12, 14
LCA110L	BI+	350	120	35	2	3 / 3	3750	1	12, 14
LCA120	BI+	250	170	20	5	3 / 3	3750	1	12, 14
LCA120L	BI+	250	150	20	5	3 / 3	3750	1	12, 14
LCA125	BI+	300	170	16	5	5 / 5	3750	1	12, 14
LCA125L	BI+	300	170	20	5	5 / 5	3750	1	12, 14
LCA127	BI+	250	200	10	5	5 / 5	3750	1	12, 14
LCA127L	BI+	250	170	15	5	5 / 5	3750	1	12, 14
LCA129	BI+	250	170	20	2	8 / 8	3750	1	12, 14
LCA182	BI+	350	120	35	0.25	3 / 3	3750	1	12, 14
LCA701	BI+	100	1500	0.3	2	4 / 1	3750	1	12, 14
LCA710	BI+	60	1000	0.5	10	2.5 / 0.25	3750	1	12, 14
LCA712	BI+	60	1000	0.5	10	2.5 / 0.35	3750	0.01	12, 14
LCA715	BI+	60	2200	0.15	5	2.5 / 0.25	3750	1	12, 14
LCA717	BI+	30	2000	0.15	2	3 / 3	3750	1	12, 14
OMA160	BI+	250	50	100	10	0.125 / 0.125	3750	0.025	12, 14
PLA110	BI+	400	150	22	5	1 / 0.5	3750	1	12, 14
PLA110L	BI+	400	150	25	5	1 / 0.25	3750	1	12, 14
PLA132	BI+	60	600	1	2	5 / 2	3750	1	12, 14
PLA140	BI+	400	250	8	5	3 / 1	3750	1	12, 14
PLA140L	BI+	400	200	13	5	5 / 3	3750	1	12, 14
PLA143	BI+	600	100	50	2	5 / 5	4000	1	12, 14
PLA150	BI+	250	250	7	5	2.5 / 0.5	3750	1	12, 14
PLA160	BI+	300	50	100	10	0.05 / 0.05	3750	0.025	12, 14
PLA170	BI+	800	100	50	5	5 / 5	3750	1	12, 14
PLA171	BI	800	100	50	2	5 / 5	5000	1	62
PLA172P	BI	800	100	50	2	5 / 5	5000	1	62
PLA190	BI+	400	150	22	5	1 / 0.5	5000	1	12, 14
PLA191	BI+	400	250	8	5	3 / 1	5000	1	12, 14
PLA192	BI+	600	150	22	5	5 / 5	5000	1	12, 14
PLA193	BI+	600	100	50	5	5 / 5	5000	1	12, 14
PLA194	BI+	600	130	35	2	3 / 2	5000	1	12, 14
XCA170	BI+	350	100	50	5	5 / 5	3750	1	12, 14

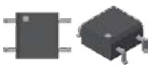
10
4-Pin SOP

12
6-Pin Surface Mount

14
6-Pin DIP

17
8-Pin SOP

20
8-Pin DIP

21
8-Pin Flatpack

22
8-Pin Surface Mount

42
4-Pin DIP

43
4-Pin Surface Mount

62
6-Pin Flatpack (8-Pin Body)

1-Form-A Relays: Dual Single-Pole

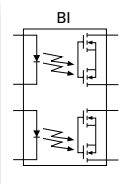

Part Number	Relay Type	Blocking Voltage	Load Current	On Resistance	Input Control Current	Switching Speeds t_{on}/t_{off}	Isolation Voltage	Off-State Leakage	Package Type
		V_P	mA	Ω	mA	ms	V_{rms}	µA	
CPC2014N	BI	60	400	2	2	2 / 1	1500	1	17
CPC2017N	BI	60	120	16	1	3 / 3	1500	1	17
CPC2025N	BI	400	120	30	2	2 / 1	1500	1	17
CPC2030N	BI	350	120	30	2	2 / 1	1500	1	17
LAA100	BI	350	120	25	5	5 / 5	3750	1	20, 21, 22
LAA100L	BI	350	120	25	5	5 / 5	3750	1	20, 21, 22
LAA108	BI	100	300	8	2	3 / 3	3750	1	20, 21, 22
LAA110	BI	350	120	35	5	3 / 3	3750	1	20, 21, 22
LAA110L	BI	350	120	35	5	3 / 3	3750	1	20, 21, 22
LAA120	BI	250	170	20	5	5 / 5	3750	1	20, 21, 22
LAA120L	BI	250	150	25	5	5 / 5	3750	1	20, 21, 22
LAA125	BI	350	170	16	5	5 / 5	3750	1	20, 21, 22
LAA125L	BI	350	150	18	5	5 / 5	3750	1	20, 21, 22
LAA127	BI	250	200	10	5	5 / 5	3750	1	20, 21, 22
LAA127L	BI	250	170	10	5	5 / 5	3750	1	20, 21, 22
LAA710	BI	60	1000	0.5	10	2.5 / 0.25	3750	1	20, 22
OAA160	BI	250	50	100	6	0.125 / 0.125	3750	0.025	20, 21, 22
PAA110	BI	400	150	22	5	1 / 0.25	3750	1	20, 21, 22
PAA110L	BI	400	150	25	5	1 / 0.5	3750	1	20, 21, 22
PAA127	BI	280	200	10	3	0.5 / 0.5	3750	0.025	20, 21, 22
PAA132	BI	60	600	1	2	5 / 2	3750	1	20, 22
PAA140	BI	400	250	8	5	3 / 1	3750	1	20, 21, 22
PAA140L	BI	400	200	13	5	5 / 3	3750	1	20, 22
PAA150	BI	250	250	7	5	2.5 / 0.5	3750	1	20, 21, 22
PAA190	BI	400	150	22	5	1 / 0.5	5000	1	20, 22
PAA191	BI	400	250	8	5	3 / 1	5000	1	20, 22
PAA193	BI	600	100	50	5	5 / 5	5000	10	20, 22
XAA117	BI	60	150	16	1	5 / 5	3750	1	20, 21, 22
XAA170	BI	350	100	50	5	5 / 5	3750	1	20, 21, 22

©2023 Littelfuse, Inc

1-Form-B Relays: Single-Pole

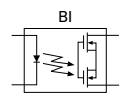

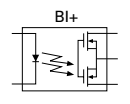

Part Number	Relay Type	Blocking Voltage	Load Current	On Resistance	Input Control Current	Switching Speeds t_{on}/t_{off}	Isolation Voltage	Off-State Leakage	Package Type
		V_P	mA	Ω	mA	ms	V_{rms}	µA	
CPC1106N	BI	60	75	10	0.5	10 / 10	1500	1	10
CPC1114N	BI	60	400	2	2	2 / 5	1500	1	10
CPC1117N	BI	60	150	16	1	10 / 10	1500	1	10
CPC1125N	BI	400	100	35	2	2 / 2	1500	5	10
CPC1130N	BI	350	120	30	2	2 / 2	1500	5	10
CPC1135N	BI	350	120	35	2	2 / 2	1500	5	10
CPC1150N	BI	350	120	50	2	1 / 2	1500	5	10
CPC1231N	BI	350	120	30	2	2 / 2	1500	5	10
CPC1333	BI	350	130	30	2	2 / 3	5000	1	42, 43
LCB110	BI+	350	120	35	5	3 / 3	3750	1	12, 14
LCB111	BI+	350	120	35	2	5 / 5	3750	1	12, 14
LCB120	BI+	250	170	20	5	5 / 5	3750	1	12, 14
LCB126	BI+	250	170	15	5	5 / 5	3750	1	12, 14
LCB127	BI+	250	200	10	5	5 / 5	3750	1	12, 14
LCB710	BI+	60	1000	0.6	2	3 / 3	3750	1	12, 14
LCB716	BI+	60	500	2	2	3 / 3	3750	1	12, 14
LCB717	BI+	30	1500	0.3	2	2 / 5	3750	1	12, 14
PLB150	BI+	250	250	7	5	1 / 2.5	3750	1	12, 14
PLB171	BI	800	80	55	2	5 / 5	5000	1	62
PLB190	BI+	400	130	25	2	1 / 2.5	5000	1	12, 14
XCB170	BI+	350	100	50	5	5 / 5	3750	1	12, 14

1-Form-B Relays: Dual Single-Pole

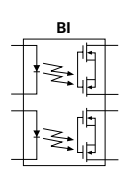

Part Number	Relay Type	Blocking Voltage	Load Current	On Resistance	Input Control Current	Switching Speeds t_{on}/t_{off}	Isolation Voltage	Off-State Leakage	Package Type
		V_P	mA	Ω	mA	ms	V_{rms}	µA	
CPC2125N	BI	400	100	35	2	2 / 2	1500	5	17
LBB110	BI	350	120	35	5	3 / 3	3750	1	20, 21, 22
LBB120	BI	250	170	20	5	5 / 5	3750	1	20, 22
LBB126	BI	250	170	15	5	5 / 5	3750	1	20, 21, 22
LBB127	BI	250	200	10	5	5 / 5	3750	1	20, 21, 22
PBB150	BI	250	250	7	5	2.5 / 2.5	3750	1	20, 21, 22
PBB190	BI	400	130	25	2	1 / 2.5	5000	1	20, 22
XBB170	BI	350	100	50	5	5 / 5	3750	1	20, 21, 22

1-Form-A & 1-Form-B Combination Relays

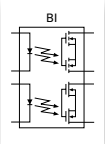

Part Number	Relay Type	Blocking Voltage	Load Current	On Resistance	Input Control Current	Switching Speeds t_{on}/t_{off}	Isolation Voltage	Off-State Leakage	Package Type
		V_P	mA	Ω	mA	ms	V_{rms}	µA	
CPC2317N	BI	60	120	16	1	3 / 3	1500	1 / 1	17
CPC2330N	BI	350	120	30	2	3 / 3	1500	1 / 5	17
LBA110	BI	350	120	35	2	3 / 3	3750	1 / 1	20, 21, 22
LBA110L	BI	350	120	35	5	3 / 3	3750	1 / 1	20, 21, 22
LBA120	BI	250	170	20	5	5 / 5	3750	1 / 1	20, 21, 22
LBA120L	BI	250	150	25	5	5 / 5	3750	1 / 1	20, 22
LBA127	BI	250	200	10	5	5 / 5	3750	1 / 1	20, 21, 22
LBA127L	BI	250	150	15	5	5 / 5	3750	1 / 1	20, 22
LBA710	BI	60	1000	0.6	2	5 / 5	3750	1 / 1	20, 22
LBA716	BI	60	1000	0.4	2	5 / 5	3750	1 / 1	20, 22
PBA150	BI	250	250	7	5	2.5 / 2.5	3750	1 / 1	20, 22

1-Form-A Relays: Single-Pole, Unidirectional (DC-only)

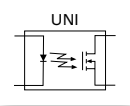

Part Number	Relay Type	Blocking Voltage	Load Current	On Resistance	Input Control Current	Switching Speeds t_{on}/t_{off}	Isolation Voltage	Off-State Leakage	Package Type
		V_P	mA	Ω	mA	ms	V_{rms}	µA	
CPC1002N	UNI	60	700	0.55	2	5 / 2	1500	1 / 1	10
CPC1004N	UNI	100	300	4	2	3 / 1	1500	1 / 1	10

2-Form-A Relays: Double-Pole, Single-Throw

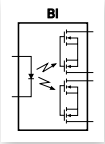

Part Number	Relay Type	Blocking Voltage	Load Current	On Resistance	Input Control Current	Switching Speeds t_{on}/t_{off}	Isolation Voltage	Off-State Leakage	Package Type
		V_P	mA	Ω	mA	ms	V_{rms}	µA	
LCA210	BI	350	85	35	8	3 / 3	3750	1 / 1	20, 22
LCA210L	BI	350	85	35	8	4 / 4	3750	1 / 1	20, 22
LCA220	BI	250	120	20	10	5 / 5	3750	1 / 1	20, 22

1-Form-C Relays: Common Input, Single-Pole, Double-Throw

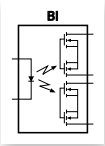

Part Number	Relay Type	Blocking Voltage	Load Current	On Resistance	Input Control Current	Switching Speeds t_{on}/t_{off}	Isolation Voltage	Off-State Leakage	Package Type
		V_P	mA	Ω	mA	ms	V_{rms}	µA	
LCC110	BI	350	120	35	8	4 / 4	3750	1 / 1	20, 21, 22
LCC120	BI	250	170	20	10	5 / 5	3750	1 / 1	20, 22

©2023 Littelfuse, Inc

Current Limiting SSRs with Voltage Triggered Shutdown & Thermal Management

All of the Fault-Protected Solid State Relays (SSR) listed below feature active current Limiting and Thermal Management, while the CPC1540, CPC1563, and CPC1593 additionally feature Voltage-Triggered Shutdown, or VTS.

Fault-Protected SSRs can directly replace footprint-compatible standard SSRs in existing designs to improve end-product survivability.

These Fault-Protected relays resume normal operation upon removal of the fault condition or upon cycling the input control current. Should the fault condition repeat or persist, the fault protection will immediately resume.

Active Current Limiting: All Fault-Protected SSRs limit load current to protect both the load and the SSR.

Voltage Triggered Shutdown: CPC1540, CPC1563, and CPC1593 incorporate a third protection feature called Voltage-Triggered Shutdown (VTS).

During a current limiting event, this advanced thermal management protection feature reduces the relay current to <100µA whenever the voltage drop across the relay exceeds a non-adjustable predetermined threshold, thereby preventing excessive heating of the SSR.

Thermal Management: All Fault-Protected relays include a traditional thermal management feature that deactivates the SSR outputs if the die temperature exceeds a safe limit, regardless of the Active Current Limiting state and, when equipped, the Voltage-Triggered Shutdown state. This feature provides excellent power cross immunity.

Features & Benefits

- Provide excellent power-cross immunity
- Resumes normal operation after fault is removed
- Ideal for use in electromagnetically noisy environments

Applications

- Telephony hook switches
- Electronic switching
- Security
- Industrial controls

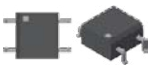

10
4-Pin SOP

17
8-Pin SOP

22
8-Pin Surface Mount

12
6-Pin Surface Mount

20
8-Pin DIP

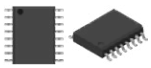

32
16-Pin SOIC

14
6-Pin DIP

21
8-Pin Flatpack

36
Power SIP

Part Number	Blocking Voltage	Input Control Current	On-Resistance (Max) Configuration		Load Current (Max) Configuration		Current Limit (Max) Configuration		VTS[1] Threshold (V_{TH})	Switching Speed	Isolation Voltage	Package Type
			DC	AC	DC	AC	DC	AC		t_{on} / t_{off}		
	(V_P)	(mA)	(Ω)	(Ω)	(mA)	(mA)	(mA_P)	(mA_P)	(V)	(ms)	(V_{rms})	
CPC1510	250	2	3.75	15	350	200	920	450	–	2 / 2	3750	12, 14
CPC1511	230	2.5	–	4	–	450	–	1400	–	4 / 2	3750	36
CPC1540	350	2	6.75	25	250	120	570	285	100 [1]	2 / 2	3750	12, 14
CPC1560	60	1.1	1.4	5.6	600	300	1500	900	–	0.1 / 0.4	3750	20, 22
CPC1561	60	2.5	–	0.245	–	1000 [2]	–	3000	–	2.5 / 0.5	3750	32
CPC1563	600	2	11.75	35	250	120	570	285	100 [1]	2 / 2	3750	12, 14
CPC1593	600	2	11.75	35	250	120	570	285	17.5 [1]	2 / 2	3750	12, 14

1 Deactivates the switch when the load voltage exceeds the VTH threshold while the switch is in current limit.
2 Load current rating at up to 60°C.

With I_{LIMIT} Without VTS

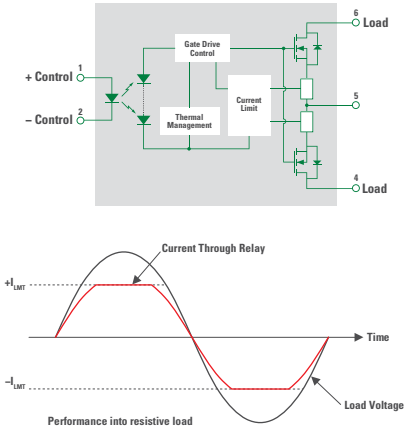

With I_{LIMIT} With VTS

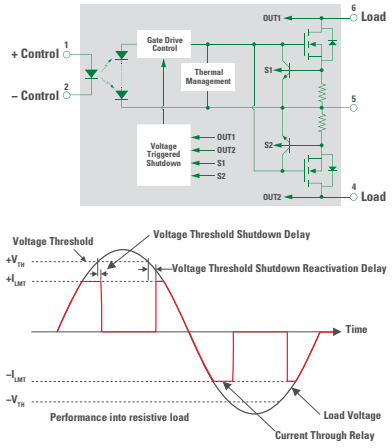

1-Form-A Power Relays: Single-Pole, Bidirectional

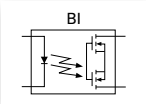

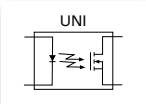

Part Number	Relay Type	Blocking Voltage	Load Current			On Resistance	Input Control Current	Switching Speeds	Isolation Voltage	Off-State Leakage	Package Type
			Free Air	5°C/W Heat Sink	$T_C = 25°C$			t_{on} / t_{off}			
		V_P	A_{rms}	A_{rms}	A_{rms}	Ω	mA	ms	V_{rms}	µA	
1-Form-A Power Relays: Single-Pole. Bidirectional											
CPC1906Y	BI	60	2	–	–	0.30	10	10 / 5	2500	1	36
CPC1907B	BI	60	6	–	–	0.06	5	5 / 1	5000	1	66
CPC1908J	BI	60	3.5	8.5	15	0.30	10	20 / 5	2500	1	29
CPC1909J	BI	60	6.5	15	15	0.10	10	25 / 10	2500	1	37
CPC1916Y	BI	100	2.5	–	–	0.34	10	5 / 3	2500	1	36
CPC1918J	BI	100	5.25	13	15	0.10	10	25 / 10	2500	1	37
CPC1926Y	BI	250	0.7	–	–	1.40	10	10 / 10	2500	1	36
CPC1927J	BI	250	2.7	6.7	15	0.20	10	25 / 10	2500	1	37
CPC1967J	BI	400	1.35	3.35	13.15	0.85	10	20 / 5	2500	1	29
CPC1968J	BI	500	2	5	15	0.35	10	20 / 5	2500	1	37
CPC1973Y	BI	400	0.35	–	–	5.00	10	5 / 3	2500	1	36
CPC1977J	BI	600	1.25	3.1	8	1.00	10	20 / 5	2500	1	29
CPC1978J	BI	800	0.75	1.85	7.25	2.30	10	20 / 5	2500	1	29
CPC1979J	BI	600	1.4	3.5	14.5	0.75	10	25 / 5	2500	1	37
CPC1981Y	BI	1000	0.18	–	–	18.00	10	10 / 5	2500	1	36
CPC1983B	BI	600	0.5	–	–	6.00	5	5 / 2	5000	1	66
CPC1983Y	BI	600	0.5	–	–	6.00	5	5 / 2	2500	1	36
CPC1983YE	BI	600	0.5	–	–	6.00	5	5 / 2	4000	1	36
CPC1984Y	BI	600	1	–	–	0.66	5	10 / 2	4000	1	36
CPC1986J	BI	1000	0.65	1.6	6.5	3.00	10	20 / 5	2500	1	29
CPC1988J	BI	1000	0.9	2.25	9.4	2.50	10	20 / 5	2500	1	37
Dual 1-Form-A Power Relay: Bidirectional											
CPC2907B	BI	60	2	–	–	0.15	5	2.5 / 0.25	4000	1	66
1-Form-A Power Relays: Single-Pole. Unidirectional											
CPC1706Y	UNI	60	4	–	–	0.09	5	5 / 2	2500	1	36
CPC1708J	UNI	60	4	11.85	24	0.08	10	20 / 5	2500	1	29
CPC1709J	UNI	60	9	22.8	32	0.05	10	20 / 5	2500	1	37
CPC1718J	UNI	100	6.75	17.5	32	0.08	10	20 / 5	2500	1	37
CPC1726Y	UNI	250	1	–	–	0.75	10	5 / 2	2500	1	36
CPC1727J	UNI	250	3.4	8.6	20	0.09	10	20 / 5	2500	1	37
CPC1777J	UNI	600	1.5	4.6	15	0.50	10	20 / 5	2500	1	29
CPC1779J	UNI	600	1.65	4.12	15	0.40	10	20 / 5	2500	1	37
CPC1786J	UNI	1000	0.65	1.75	6.9	2.00	10	20 / 5	2500	1	29
CPC1788J	UNI	1000	1	2.45	10.3	1.25	10	20 / 5	2500	1	37
1-Form-B Power Relay: Single-Pole. Unidirectional											
CPC1705Y	UNI	60	3.25	–	–	0.09	5	2 / 12	2500	1	36

©2023 Littelfuse, Inc

Optically Isolated AC Power Switches: I_{LOAD} <1A

The OptoMOS line of power products uses dual power-SCR outputs to produce an alternative to optocoupler and TRIAC circuits. AC Power Switches provide a blocking voltage of up to 800V_P. In addition, tightly controlled zero-cross circuitry ensures the switching of AC loads while minimizing the generation of transients. The input and output circuits are optically coupled to provide 3750V_{rms} of isolation and noise immunity between control and load circuits. Long life and environmental integrity make these power switches ideal for controlling a variety of AC circuits in industrial environments in which electromagnetic interference would disrupt the operation of electromechanical relays.

2
4-Pin DIP (16-Pin Body)

16
6-Pin Power DIP SMD

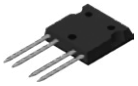

29
i4-PAC

12
6-Pin Surface Mount

20
8-Pin DIP

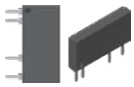

36
Power SIP

14
6-Pin DIP

22
8-Pin Surface Mount

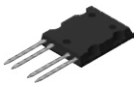

37
ISOPLUS-264

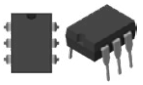

15
6-Pin Power DIP

23
4-Pin SIP (8-Pin Body)

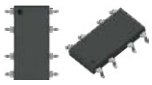

66
Power SOIC

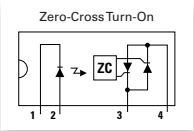

Part Number	Blocking Voltage	Load Current	Input Control Current	Operating Frequency Range	Isolation Voltage	Fig. No.
	V_P	A	mA	Hz	V_{rms}	
CPC1943	400	0.5	5	20 - 500	3750	15, 16
CPC1945G	400	1	5	20 - 400	3750	2
CPC1945Y	400	1	5	20 - 400	3750	23
CPC1961 Dual	600	0.25 [1]	5	20 - 500	3750	20, 22
CPC1963	600	0.5	5	20 - 500	3750	15, 16
CPC1965G	600	1	5	20 - 400	3750	2
CPC1965Y	600	1	5	20 - 400	3750	23
CPC1972	800	0.25	5	20 - 500	3750	12, 14
PD1201	400	1	5	20 - 500	3750	2
PD2401	500	1	5	20 - 500	3750	2
PD2601	600	1	5	20 - 500	3750	2
PM1204	400	0.5	5	20 - 500	3750	15, 16
PM1205	500	0.5	5	20 - 500	3750	15, 16
PM1206	600	0.5	5	20 - 500	3750	15, 16
PS1201	400	1	5	20 - 500	3750	23
PS2401	500	1	5	20 - 500	3750	23
PS2601	600	1	5	20 - 500	3750	23

1 Maximum continuous load current of a single pole or the sum of the load currents with both poles operating simultaneously.

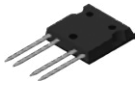

29
i4-PAC

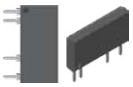

36
Power SIP

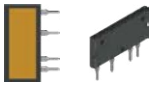

64
Super SIP

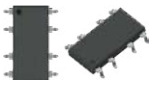

66
Power SOIC

Optically-Isolated AC Power Switches: I_{LOAD} >1A

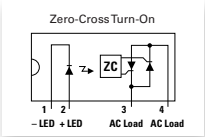

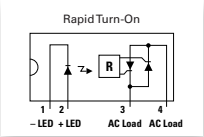

Part Number	Blocking Voltage	Load Current			Input Control Current	Operating Frequency Range	Isolation Voltage	Fig. No.
		No Heat Sink	with 5°C/W Heat Sink	T_C = 25°C				
	V_P	A_{rms}	A_{rms}	A_{rms}	mA	Hz	V_{rms}	
CPC1964B	800	1.5	–	–	5	20 – 500	5000	66
CPC1964BX6[1]	600	1.5	–	–	5	20 – 500	5000	66
CPC1966	600	3	–	–	5	20 – 500	3750	36
CPC1966B	800	3	–	–	5	20 – 500	5000	66
CPC1966BX8[1]	800	3	–	–	5	20 – 500	5000	66
CPC1966YX6[1]	600	3	–	–	5	20 – 500	3750	36
CPC1966YX8[1]	800	3	–	–	5	20 – 500	3750	36
CPC1976	600	2	–	–	5	20 – 500	3750	36
CPC1976YX6[1]	600	2	–	–	5	20 – 500	3750	36
CPC1998J	800	5	20	50	5	20 – 500	2500	29
CPC40055ST	800	5	20	40	5	20 – 500	2500	64

1 Rapid turn-on (non-zero-cross)
Rapid turn-on devices turn on when the control input becomes true regardless of the load voltage phase. They turn off when the load current crosses zero.

Gate Driver IC Packages

20
8-Pin DIP
Package Code: PI

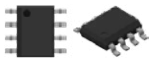

54
8-Pin SOIC
Package Code: SIA

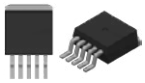

58
5-Pin TO-263
Package Code: YI

52
SOT23-5
Package Code: R

56
8-Pin DFN
Package Code: D2

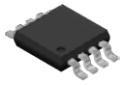

92
8-Pin
MSOP

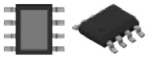

53
8-Pin Power SOIC
Package Code: SI

57
5-Pin TO-220
Package Code: CI

©2023 Littelfuse, Inc

Low-Side Gate Drivers

IXYS Integrated Circuits offer powerful families of ultra-fast Low-Side Gate Drivers for MOSFETs and IGBTs, with a large mix of logic configurations, packaging, and drive current capabilities. Five of these devices are AEC-Q100 qualified.

Single-output and dual-output low-side driver ICs include selectable options for logic combinations. The range of current ratings offered is the broadest available, extending to 30A peak, which is the LARGEST PEAK DRIVE CURRENT capability for an integrated driver on the market.

In all series devices, internal circuitry eliminates cross conduction and current "shoot-through," and the driver is virtually immune to latch up.

Features & Benefits

- 1.5A to 30A peak source sink drive current
- Wide operating voltage range up to 35V
- –40°C to +125°C extended operating temperature range
- Logic input withstands negative swing of up to –5V
- Dual drivers have matched rise and fall times
- Low propagation delay time

Applications

- Efficient power MOSFET and IGBT switching
- Switch mode power supplies
- Motor controls
- DC-to-DC converters
- Class-D switching amplifiers
- Pulse transformer driver

Part Number	Output Type	I_{PEAK} $T_C = 25°C$	Output Resistance	Logic Configuration	Enable Function	Under-Voltage Lockout	Figure Number
		A_P	Ω			V	
IX4426	DUAL	1.5	8	I	–	–	54, 56
IX4427	DUAL	1.5	8	N	–	–	54, 56
IX4428	DUAL	1.5	8	F	–	–	54, 56
IX4310T	SINGLE	2	3	D	–	V_{CC} <4.2	52
IXD_602	DUAL	2	4	F, I, N	–	–	20, 53, 54, 56
IXD_604	DUAL	4	2.5	F, I, N, D	•	–	20, 53, 54, 56
IX4340	DUAL	5	1.5	D	•	V_{CC} <3.8	53, 54, 92
IXD_609	SINGLE	9	1	I, N, D	•	–	20, 53, 54, 56, 57, 58
IXD_614	SINGLE	14	0.8	I, N, D	•	–	20, 53, 57, 58
IXD_630	SINGLE	30	0.4	I, N, D	•	V_{CC} <12.5	57, 58
IXD_630M	SINGLE	30	0.4	I, N, D	•	V_{CC} <9	57, 58

AEC-Q100-Qualified Low-Side Gate Drivers

Part Number	Output Type	I_{PEAK} $T_C = 25°C$	Output Resistance	Logic Configuration	Enable Function	Under-Voltage Lockout	Figure Number
		A_P	Ω			V	
IXD_604SI	DUAL	4	2.5	F, I, N, D	•	–	53
IXD_604SIA	DUAL	4	2.5	F, I, N, D	•	–	54
IX4340NE	DUAL	5	1.5	D	•	V_{CC} <3.8	53
IXD_609SI	SINGLE	9	1	I, N, D	•	–	53
IXD_614SI	SINGLE	14	0.8	I, N, D	•	–	53

Logic Configurations

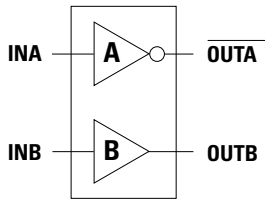

F

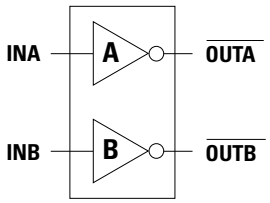

I

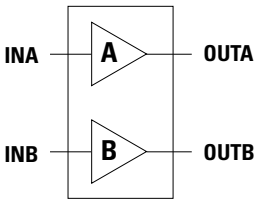

N

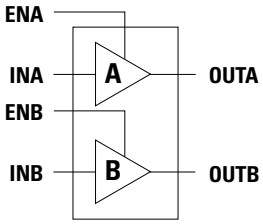

D

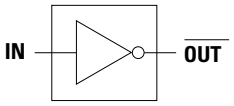

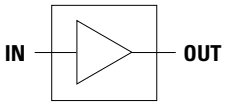

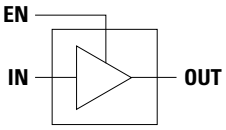

IX4351NE 9A Low-Side SiC MOSFET & IGBT Driver

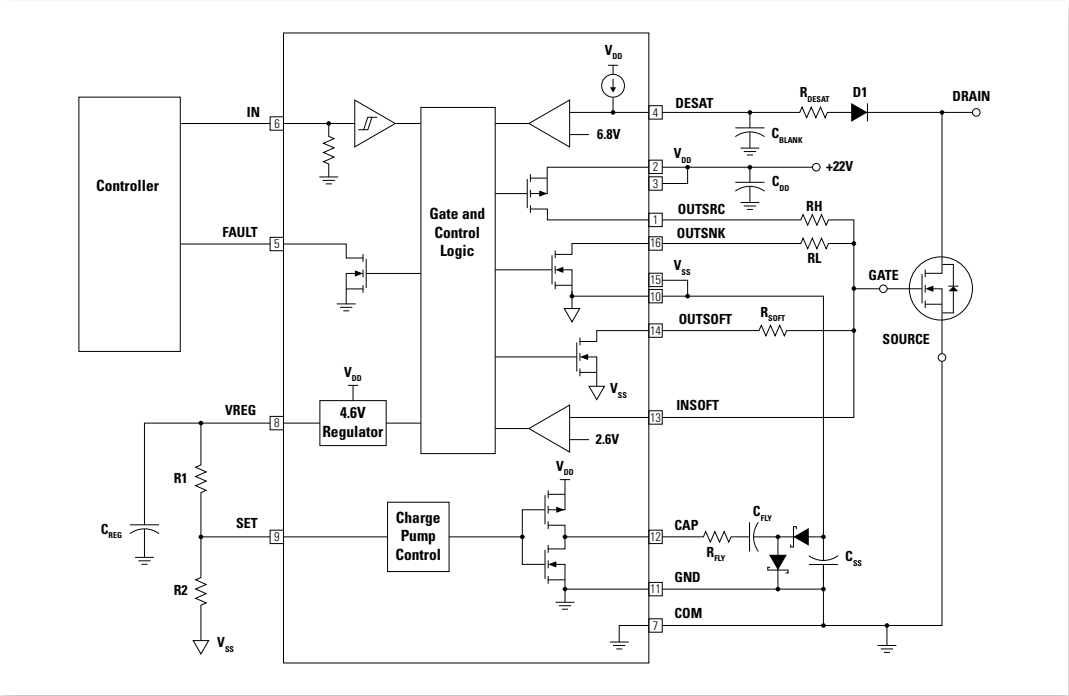

The IX4351NE is designed specifically to drive SiC MOSFETs and high-power IGBTs. Separate 9A source and sink outputs allow for tailored turn-on and turn-off timing while minimizing switching losses. An internal negative charge regulator provides a selectable negative gate drive bias for improved dV/dt immunity and faster turn-off.

Desaturation detection circuitry senses an overcurrent condition of the SiC MOSFET or IGBT and initiates a soft turn-off, thus preventing a potentially damaging dV/dt event. The non-inverting logic input, IN, is TTL and CMOS compatible; internal level shifters provide the necessary bias to accommodate negative gate drive bias voltages. Additional protection features include UVLO detection and thermal shutdown. An open drain FAULT output signals a fault condition to the microcontroller.

The IX4351NE is rated for an operational temperature range of –40°C to +125°C, and is available in a thermally enhanced 16-pin narrow SOIC package.

Features & Benefits

- Separate 9A peak source and sink outputs
- V_{DD} input supply voltage range: +13V to +25V
- Adjustable gate drive voltage range: –10V to +25V
- Internal logic level shifters
- Desaturation detection with soft shutdown sink driver
- Under Voltage Lockout (UVLO)
- Thermal shutdown
- Open drain FAULT output
- TTL and CMOS compatible input

Applications

- Driving SiC MOSFETs and IGBTs
- On-board charger and DC charging station
- AC/DC and DC/DC converters
- Industrial power inverters
- Motor controllers

IX4351NE
(16-pin narrow SOIC package with exposed pad)

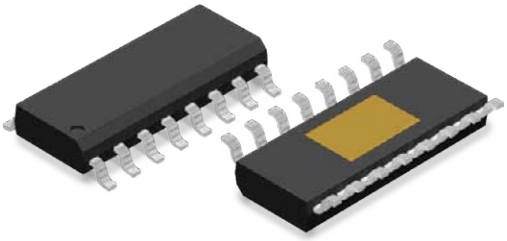

©2023 Littelfuse, Inc

High-Side and Low-Side Gate Driver ICs

High-side and low-side drivers control two N-Channel MOSFETs or IGBTs in fast switching applications. The gate driver converts PWM input signals into gate signals compatible with MOSFETs or IGBTs, providing a robust and efficient power semiconductor control. An integrated bootstrap circuit is generates a floating voltage that enables the high-side driver to operate up to 600V_{DC}.

The drivers accept wide V_{DD} supply voltage as well as wide logic input voltage ranges. Various built-in protection features ensure the safe operation of the driver and the driven power semiconductors.

Features & Benefits

- High-side operation up to 600V_{DC}
- Outputs tolerant to negative transients
- Supply voltage range: 10V to 20V
- Logic input voltage range: 3.3V to 20V
- Fixed or programmable deadtime
- Cycle-by-cycle edge-triggered shutdown circuitry
- Under Voltage Lockout (UVLO)
- Operating temperature range: –40°C to +125°C

Applications

- DC-DC Converters
- AC-DC Inverters
- Motor Controls
  - Servo Motor Control
  - Pumps and Fans
- Class-D Power Amplifiers
- Uninterruptable Power Supplies (UPS)
- Welding
- Induction Cooking

LF2110 and LF2113 Application Circuit

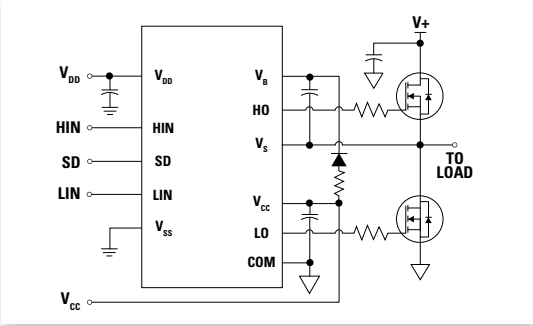

Part Number	Type / Description	Max. Offset Voltage	Typ. Sink/Source Peak Drive Current	Inputs	Deadtime	Propagation Delay t_{ON}/t_{OFF}	Rise/Fall Time t_r/t_f	Package
LF2101NTR	High-Side / Low-Side	600 V	600 mA / 290 mA	HIN / LIN	none	160 ns / 150 ns	70 ns / 35 ns	8-pin SOIC
LF2106NTR	High-Side / Low-Side	600 V	600 mA / 290 mA	HIN / LIN	none	220 ns / 200 ns	100 ns / 35 ns	8-pin SOIC
LF21064NTR	High-Side / Low-Side	600 V	600 mA / 290 mA	HIN / LIN	none	220 ns / 200 ns	100 ns / 35 ns	14-pin SOIC
LF2181NTR	High-Side / Low-Side	600 V	2.3 A / 1.9 A	HIN / LIN	none	180 ns / 220 ns	40 ns / 20 ns	8-pin SOIC
LF21814NTR	High-Side / Low-Side	600 V	2.3 A / 1.9 A	HIN / LIN	none	180 ns / 220 ns	40 ns / 20 ns	14-pin SOIC
LF2110BTR	High-Side / Low-Side	600 V	2.3 A / 1.9 A	HIN / LIN	none	105 ns / 94 ns	15 ns / 13 ns	16-pin SOIC
LF2113BTR	High-Side / Low-Side	600 V	2.3 A / 1.9 A	HIN / LIN	none	105 ns / 94 ns	15 ns / 13 ns	16-pin SOIC
LF2190NTR	High-Side / Low-Side	600 V	4.5 A / 4.5 A	HIN / LIN	none	140 ns / 140 ns	25 ns / 20 ns	8-pin SOIC
LF21904NTR	High-Side / Low-Side	600 V	4.5 A / 4.5 A	HIN / LIN	none	140 ns / 140 ns	25 ns / 20 ns	14-pin SOIC

Half-Bridge Gate Driver ICs

Half-bridge gate drivers control two N-Channel MOSFETs or IGBTs in fast switching applications. The gate driver converts PWM input signals into gate-signals compatible to MOSFETs or IGBTs, providing a robust and efficient power semiconductor control. An integrated bootstrap circuit is generating a floating voltage with enables the high-side driver to operate up to 600V_{DC}.

The drivers accept wide V_{DD} supply voltage as well as wide logic input voltage ranges. Various built-in protection features ensure safe operation of the driver and the driven power semiconductors.

Features & Benefits

- High-side operation up to 600V_{DC}
- Outputs tolerant to negative transients
- Supply voltage range: 10V to 20V
- Logic input voltage range: 3.3V to 20V
- Fixed or programmable deadtime
- Cycle-by-cycle edge-triggered shutdown circuitry
- Under Voltage Lockout (UVLO)
- Operating temperature range: –40°C to +125°C

Applications:

- Motor Controls / Drives
- Stepper Motor Drives
- DC/DC-Converters
- AC/DC-Inverters
- Robotics
- Cordless Power Tools
- Drones

LF2103 Application Circuit

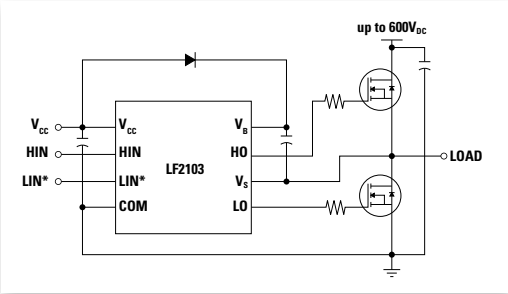

Part Number	Type / Description	Max. Offset Voltage	Typ. Sink/Source Peak Drive Current	Inputs	Deadtime	Propagation Delay t_{ON}/t_{OFF}	Rise/Fall Time t_r/t_f	Package
LF2103NTR	High-Side / Low-Side	600 V	600 mA / 290 mA	HIN / LIN*	520 ns	680 ns / 150 ns	70 ns / 35 ns	8-pin SOIC
LF2104NTR	High-Side / Low-Side	600 V	600 mA / 290 mA	IN / SD*	520 ns	680 ns / 150 ns	70 ns / 35 ns	8-pin SOIC
LF2304NTR	High-Side / Low-Side	600 V	600 mA / 290 mA	HIN / LIN	100 ns	150 ns / 150 ns	70 ns / 35 ns	8-pin SOIC
LF2184NTR	High-Side / Low-Side	600 V	2.3 A / 1.9 A	IN / SD*	400 ns	680 ns / 270 ns	40 ns / 20 ns	8-pin SOIC
LF21844NTR	High-Side / Low-Side	600 V	2.3 A / 1.9 A	IN / SD*	400 ns - 5 µs	680 ns / 270 ns	40 ns / 20 ns	14-pin SOIC

3-Phase Half-Bridge Gate Driver ICs

Switching three pairs of N-Channel MOSFETs or IGBTs in 6-pack configurations is challenging in fast switching applications. 3-phase gate drivers convert PWM input signals into gate signals compatible to MOSFETs or IGBTs, providing robust and efficient power semiconductor control.

Integrated bootstrap circuits generate floating voltages, enabling the three high-side drivers to operate up to 600 V_{DC}.

The drivers accept wide V_{DD} supply voltage as well as wide logic input voltage ranges. Various built-in protection features ensure the safe operation of the driver and the driven power semiconductors.

Features & Benefits

- High-side operation up to 600V_{DC}
- Outputs tolerant to negative transients
- Supply voltage range: 10V to 20V
- Logic input voltage range: 3.3V to 20V
- Cycle-by-cycle edge-triggered shutdown circuitry
- Under Voltage Lockout (UVLO)
- Matched propagation delay times
- Cross-conduction prevention logic
- Shoot-through protection logic
- Internal deadtime
- Operating temperature range: –40°C to +125°C

Applications

- 3-Phase Motor Drives
- White Goods
  - Pump Motors
  - Compressor Motors
  - Fan Motors
- Air Conditioners
- Cordless Power Tools
- Robotics

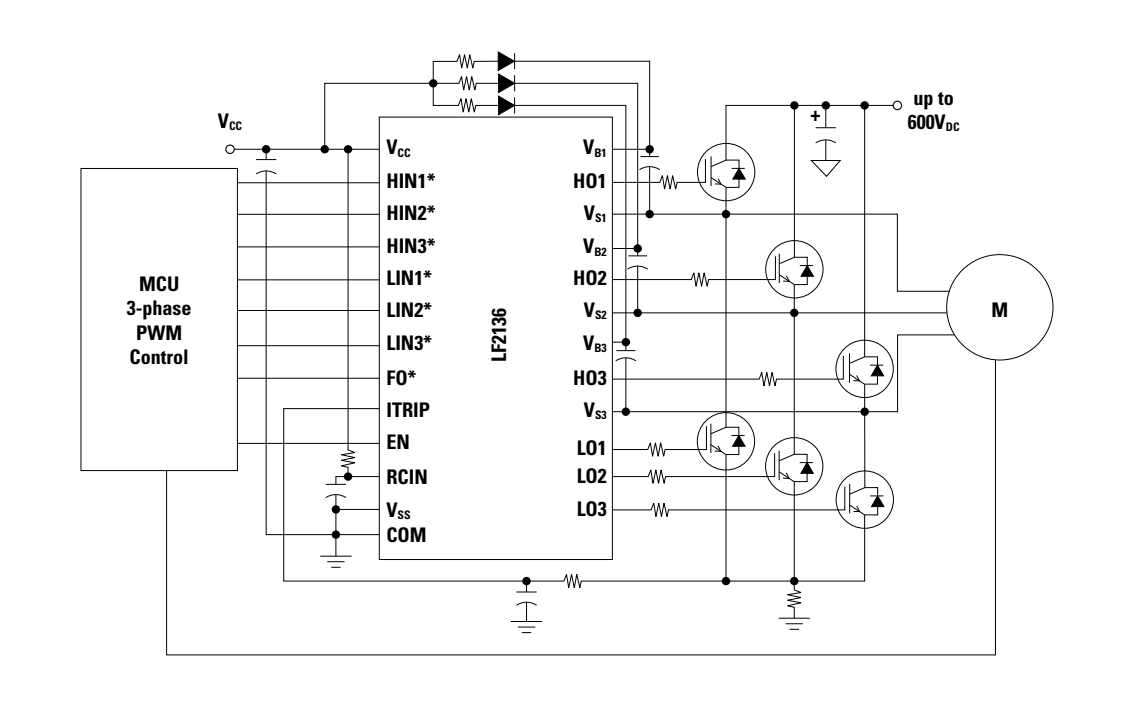

20-Pin SOIC

28-Pin SOIC

Part Number	Max. Offset Voltage	Typ. Sink/Source Peak Drive Current	Inputs	Deadtime	Propagation Delay	Rise/Fall Time	Package
					t_{ON}/t_{OFF}	t_r/t_f	
LF2388BTR	600 V	650 mA / 350 mA	HIN / LIN	270 ns	130 ns / 150 ns	50 ns / 35 ns	20-Pin SOIC
LF2136BTR	600 V	350 mA / 200 mA	HIN* / LIN*	290 ns	330 ns / 330 ns	90 ns / 35 ns	28-Pin SOIC

©2023 Littelfuse, Inc

Optically Isolated Load-Biased Gate Drivers

The CPC1580 and CPC1590 devices are MOSFET Gate Drivers that require no external power supply: They regulate the input voltage drawn from the load (up to 65V or 200V, respectively), down to 12.2V for internal use. They are specifically designed for low duty cycle switching applications that drive up to 4nF of gate capacitance.

The CPC1580 and CPC1590 devices accomplish very fast MOSFET turn-on by supplying stored charge from an external capacitor to the MOSFET gate when LED input control current is applied. After the MOSFET is turned on, photocurrent from the input optocoupler keeps it on for as long as sufficient input control current flows, so there is no low-frequency operating limit. When the MOSFET is turned off, the storage capacitor charges from the device's regulated internal voltage in preparation for the next turn-on.

Features & Benefits

- No external IC power supply required
- Low drive power requirements (TTL/CMOS compatible)
- Load voltages up to 200V
- Fast switching speeds: 40µs on; 400µs off

Applications

- Instrumentation
- Multiplexers
- I/O subsystems
- Meters (Watt-Hour, water, gas)
- Medical equipment (patient / equipment isolation)
- Security
- Industrial controls

Typical CPC1590 Application Diagram

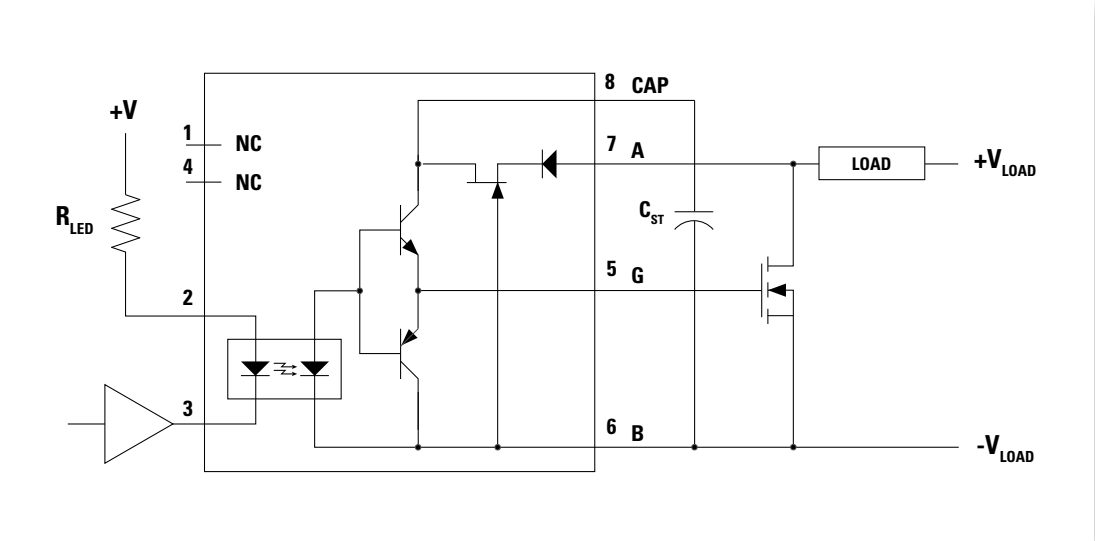

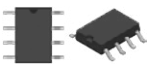

8-Pin Flatpack

Part Number	Input Control Current	Gate Voltage @I_F = 5mA	Blocking Voltage	Regulated Capacitor Voltage	Switching Speeds	Isolation Voltage
				$V_{CAP(max)}$	t_{on}/t_{off}	
	(mA)	(V_G)	(V_P)	(V)	(µs)	(V_{rms})
CPC1580	2.5	7.5 – 12	65	V_{DS} - 0.2	40 / 400	3750
CPC1590	2.5	7.5 – 12	200	16	40 / 400	3750

CPC1596: 570V Optically Isolated Load-Biased Gate Driver

The CPC1596 is an optically isolated, load-biased gate driver that requires no additional power supply to bias the external MOSFET gates; in the off-state, it regulates the voltage drawn from the load (up to 570V) down to 12.2V for internal use. It is specifically designed for low duty cycle switching applications such as an optically isolated DC relay using a single MOSFET or an AC relay with two MOSFETs.

The CPC1596 accomplishes very fast MOSFET turn-on by supplying charge stored in an external capacitor to the MOSFET gate when input control current is applied to the device's LED. After the MOSFET is turned on, photocurrent from the internal optocoupler keeps the MOSFET active for as long as sufficient input control current is applied, ensuring a very low-frequency operation. When the MOSFET is turned off, the storage capacitor charges from the load voltage via the regulated internal voltage in preparation for the next turn-on.

Provided in a small, 8-pin package and requiring no separate power supply, the CPC1596 provides a flexible design solution that minimizes PCB real estate.

Features & Benefits

- Requires No Load-Side
- Power Supply
- Drives External Power MOSFET
- Only 2.5mA Input LED Current to Drive External MOSFET
- 3750V_{RMS} Input-to-Output Isolation

Applications

- Industrial Controls
- Instrumentation
- Medical Equipment Isolation
- Electronic Switching
- I/O Subsystems
- Appliances

CPC1596 AC Application Circuit

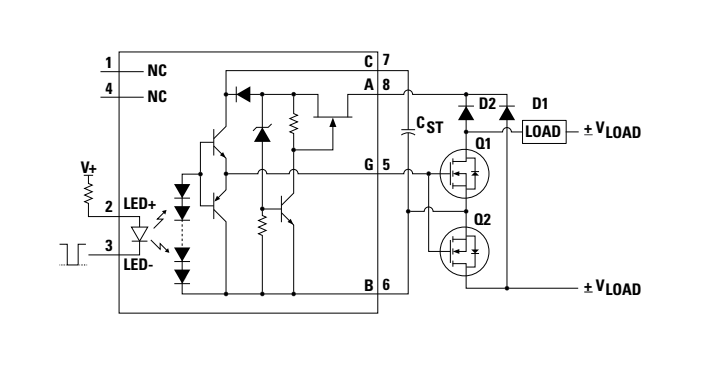

CPC1596 DC Application Circuit

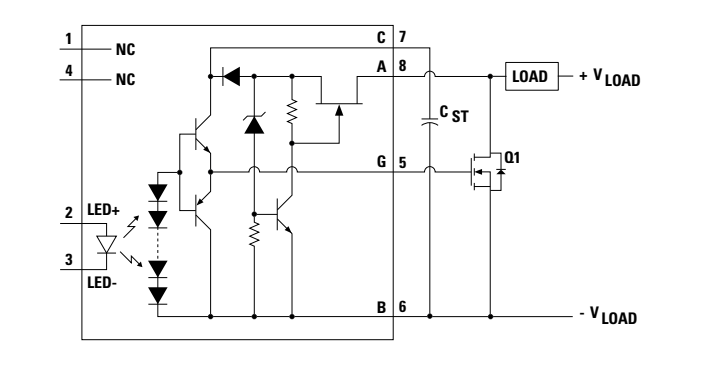

Optically Isolated Photovoltaic Gate Drivers

These dual optically isolated photodiode arrays, which can produce an open-circuit voltage of up to 12V, are well suited for use in discrete solid state relay designs. FDA215 and FDA217 are available in 8-pin DIP and 8-pin surface-mount packages.

Features

- Isolated 5.5V to 12V photovoltaic output
- Floating outputs for parallel or series configuration

Applications

- MOSFET drivers
- Isolated floating power sources

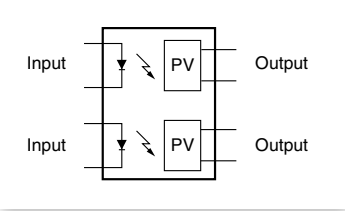

8-Pin DIP

8-Pin Surface Mount

Part Number	Input Control Current	Nominal Open-Circuit Voltage V_{OC}	Nominal Short-Circuit Current I_{SC}	Switching Speeds t_{on}/t_{off}	Isolation Voltage	Package Type
	mA	V	µA	ms	V_{rms}	
FDA215	5	5.5	2.5	5 / 5	3750	8-Pin DIP, 8-Pin Surface Mount
FDA217	5	11.75	4.5	2 / 0.5	3750	8-Pin DIP, 8-Pin Surface Mount

©2023 Littelfuse, Inc

Linear Optocouplers

IXYS IC Division linear optocouplers feature an infrared LED optically coupled with two photodiodes. One feedback (input) photodiode is used to generate a control signal that provides a servomechanism to the LED drive current, thus compensating for the LED's nonlinear time and temperature characteristics. The other (output) photodiode provides an output signal that is linear with respect to the servo LED current. The devices feature wide bandwidth, high input-to-output isolation, and excellent servo linearity.

Features & Benefits

- Couples analog & digital signals
- 3750V_{RMS} input-to-output isolation
- 200kHz bandwidth in photoconductive mode
- 40kHz bandwidth in photovoltaic mode
- High gain stability
- Low input-to-output capacitance
- Low power consumption
- 0.01% servo linearity
- THD 87dB typical

Applications

- Power supply feedback voltage/current
- Industrial and medical sensors
- Isolation of process control transducers
- Isolated 4-20mA converters

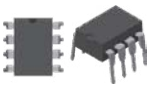

20
8-Pin DIP

21
8-Pin Flatpack

22
8-Pin
Surface Mount

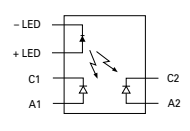

Part Number	Servo Gain $K1 = I_1/I_F$ Min/Max	Forward Gain $K2 = I_2/I_F$ Min/Max	Transfer Gain $K3 = K_2/K_1$ Min/Max	Input Control Current (mA)	Isolation Voltage (V_{rms})	Package Type
LOC110	0.004 / 0.03	0.004 / 0.03	0.668 / 1.179	2 - 10	3750	20, 21, 22
LOC111	0.008 / 0.03	0.006 / 0.03	0.733 / 1.072	2 - 10	3750	20, 21, 22
LOC112	0.004 / 0.03	0.004 / 0.03	0.733 / 1.072	2 - 10	3750	20, 21, 22
LOC117	0.008 / 0.03	0.006 / 0.03	0.887 / 1.072	2 - 10	3750	20, 21, 22

Two fundamental operating configurations

Photovoltaic Mode

- 14-bit linearity
- 40kHz bandwidth

Photoconductive Mode

- 200kHz bandwidth
- 8-bit linearity

Isolation Amplifier Photovoltaic Mode

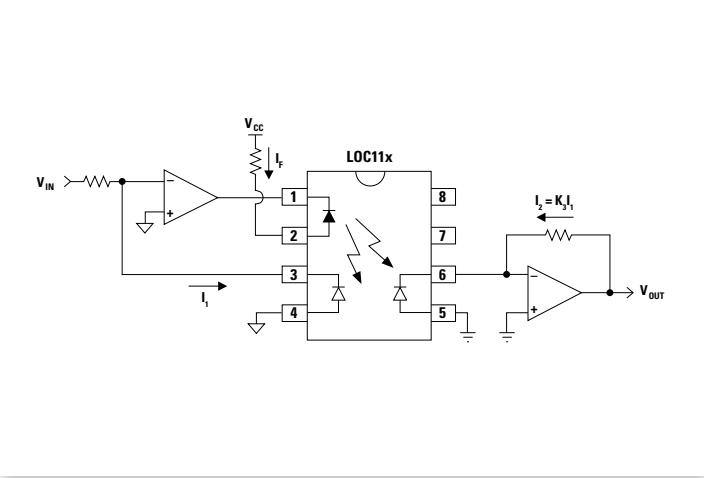

Isolation Amplifier Photoconductive Mode

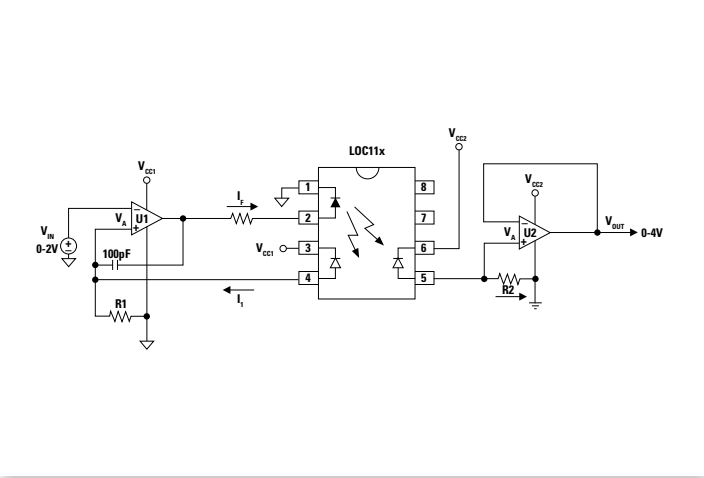

High-Power Devices

W23
Weight 250 g

W114
Weight 650 g

WC65

WC64

W24
Weight 250 g

W39
Weight 250 g

WC66

Our comprehensive range of rectifier diodes offers class-leading performance and reliability. Our devices are available with blocking voltages from 200 V up to 7.2 kV. Optimized to offer low conduction losses, these devices are ideally suited to line frequency applications up to 400 Hz, including input rectifiers for variable speed drives, traction converters, trackside substations, welding, and DC power supplies. Featuring high temperature alloyed die construction, these devices offer low thermal impedance with high overload capacity and are designed to survive even the most arduous applications.

The latest additions to the IXYS UK Rectifier Diode family are the new 38 mm and 50 mm Wespack rectifier diodes and the new 96 mm large area rectifier diodes. These new designs were constructed using low temperature sintering technology and have an improved package design for maximum power-to-package ratio, as well as better thermal and electromechanical performance. The Wespack parts are available in current ratings up to 5332 A and voltage ratings up to 3000 V. The 96 mm parts are available in current ratings up to 12100 A and voltage ratings up to 6000 V.

Also available is a new 1263 A-rated M24 stud-based assembly with voltage grades of up to 2500 V.

Rectifier Diodes – Stud Types

S

R

Part Number	V_{RRM}	I_{FAV} TC = 55°C	I_{FSM}	I^2t	V_{TO}	r_T	T_{JM}	R_{thJC}		Fig. No.
			10 ms ½ sine V_R - ≤60% V_{RRM}		@T_{JM}			d.c. 180° sine	120° Rect.	
	V	A	A	A^2s	V	mΩ	°C	K/W	K/W	
LW0428RE250	2500	428	5500	151 × 10³	0.926	0.739	150	0.1300	0.1530	W39
W0428RE280	2800	428	5500	151 × 10³	0.926	0.739	150	0.1300	0.1530	W39
W0428RE320	3200	428	5500	151 × 10³	0.926	0.739	150	0.1300	0.1530	W39
W0428RF250	2500	428	5500	151 × 10³	0.926	0.739	150	0.1300	0.1530	W24
W0428RF280	2800	428	5500	151 × 10³	0.926	0.739	150	0.1300	0.1530	W24
W0428RF320	3200	428	5500	151 × 10³	0.926	0.739	150	0.1300	0.1530	W24
W0428SE250	2500	428	5500	151 × 10³	0.926	0.739	150	0.1300	0.1530	W39
W0428SE280	2800	428	5500	151 × 10³	0.926	0.739	150	0.1300	0.1530	W39
W0428SE320	3200	428	5500	151 × 10³	0.926	0.739	150	0.1300	0.1530	W39
W0428SF250	2500	428	5500	151 × 10³	0.926	0.739	150	0.1300	0.1530	W24
W0428SF280	2800	428	5500	151 × 10³	0.926	0.739	150	0.1300	0.1530	W24
W0428SF320	3200	428	5500	151 × 10³	0.926	0.739	150	0.1300	0.1530	W24
W0503RC160	1600	503	5500	151 × 10³	0.990	0.740	180	0.1300	0.1530	W24
W0503RC200	2000	503	5500	151 × 10³	0.990	0.740	180	0.1300	0.1530	W24
W0503RC240	2400	503	5500	151 × 10³	0.990	0.740	180	0.1300	0.1530	W24
W0503SC160	1600	503	5500	151 × 10³	0.990	0.740	180	0.1300	0.1530	W24
W0503SC200	2000	503	5500	151 × 10³	0.990	0.740	180	0.1300	0.1530	W24
W0503SC240	2400	503	5500	151 × 10³	0.990	0.740	180	0.1300	0.1530	W24
W0735RA120	1200	735	9000	405 × 10³	0.790	0.342	190	0.1300	0.1530	W23
W0735RA150	1500	735	9000	405 × 10³	0.790	0.342	190	0.1300	0.1530	W23
W0735SA120	1200	735	9000	405 × 10³	0.790	0.342	190	0.1300	0.1530	W23
W0735SA150	1500	735	9000	405 × 10³	0.790	0.342	190	0.1300	0.1530	W23
W1263YC200KER	2000	675	11000	405 × 10³	0.870	0.330	175	0.1249	0.1359	W114
W1263YC250KER	2500	675	11000	405 × 10³	0.870	0.330	175	0.1249	0.1359	W114
W1263YC200KES	2000	675	11000	405 × 10³	0.870	0.330	175	0.1249	0.1359	W114
W1263YC250KES	2500	675	11000	405 × 10³	0.870	0.330	175	0.1249	0.1359	W114

©2023 Littelfuse, Inc

Standard Base Clamp Kits

Part Number	Old square base part no.	Base polarity	V_{RRM}	I_{FAV} $T_C = 100°C$	I_{FSM}	I^2t	V_T	r_T	R_{th}	Temp	Fig. No.
			V	A	kA	A^2s	V	mΩ	K/W	°C	
W1185LC450KBR [1]	SW45KBR515	Anode	4500	435	10.2	520×10^3	1.000	0.575	0.085	160	WC64
W1185LC450KBN [1]	SW45KBN515	Cathode	4500	380	10.2	520×10^3	1.000	0.575	0.101	160	WC64
W1411LC360KBR [1]	SW36KBR595	Anode	3600	505	12.2	744×10^3	0.900	0.388	0.085	160	WC64
W1411LC360KBN [1]	SW36KBN595	Cathode	3600	445	12.2	744×10^3	0.900	0.388	0.101	160	WC64
W1524LC300KBR [1]	SW30KBR636	Anode	3000	540	13.4	898×10^3	0.870	0.323	0.085	160	WC64
W1524LC300KBN [1]	SW30KBN636	Cathode	3000	470	13.4	898×10^3	0.870	0.323	0.101	160	WC64
W1748LC220KBR [1]	SW22KBR805	Anode	2200	660	13.5	911×10^3	0.870	0.280	0.085	175	WC64
W1748LC220KBN [1]	SW22KBN805	Cathode	2200	582	13.5	911×10^3	0.870	0.280	0.101	175	WC64
W2058LC120KBR [1]	SW12KBR935	Anode	1200	760	16.1	1.30×10^6	0.790	0.192	0.085	175	WC64
W2058LC120KBN [1]	SW12KBN935	Cathode	1200	665	16.1	1.30×10^6	0.790	0.192	0.101	175	WC64
W1185LC450KCR	SW45KBR515	Anode	4500	455	10.2	520×10^3	1.000	0.575	0.080	160	WC65
W1185LC450KCN	SW45KBN515	Cathode	4500	395	10.2	520×10^3	1.000	0.575	0.097	160	WC65
W1411LC360KCR	SW36KBR595	Anode	3600	530	12.0	720×10^3	0.900	0.388	0.080	160	WC65
W1411LC360KCN	SW36KBN595	Cathode	3600	460	12.0	720×10^3	0.900	0.388	0.097	160	WC65
W1524LC300KCR	SW30KBR635	Anode	3000	565	13.4	898×10^3	0.870	0.323	0.080	160	WC65
W1524LC300KCN	SW30KBN636	Cathode	3000	490	13.4	898×10^3	0.870	0.323	0.097	160	WC65
W1748LC220KCR	SW22KBR805	Anode	2200	690	13.5	911×10^3	0.870	0.280	0.080	175	WC65
W1748LC220KCN	SW22KBN805	Cathode	2200	600	13.5	911×10^3	0.870	0.280	0.097	175	WC65
W2058LC120KCR	SW12KBR935	Anode	1200	800	16.1	1.30×10^6	0.790	0.192	0.080	175	WC65
W2058LC120KCN	SW12KBN935	Cathode	1200	690	16.1	1.30×10^6	0.790	0.192	0.097	175	WC65
W3082MC450KDR	SB45KDR680	Anode	4500	1115	26.6	3.54×10^6	0.923	0.192	0.037	160	WC66
W3082MC450KDN	SB45KDN680	Cathode	4500	1030	26.6	3.54×10^6	0.923	0.192	0.041	160	WC66
W3708MC350KDR	SB35KDR820	Anode	3500	1240	33.7	5.68×10^6	0.958	0.112	0.037	160	WC66
W3708MC350KDN	SB35KDN820	Cathode	3500	1145	33.7	5.68×10^6	0.958	0.112	0.041	160	WC66
W3842MC280KDR	SB28KDR950	Anode	2800	1325	33.5	5.61×10^6	0.831	0.118	0.037	160	WC66
W3842MC280KDN	SB28KDN950	Cathode	2800	1225	33.5	5.61×10^6	0.831	0.118	0.041	160	WC66
W5636MC150KDR	SB15KDR14C	Anode	1500	2035	43.9	9.64×10^6	0.698	0.059	0.037	175	WC66
W5636MC150KDN	SB15KDN14C	Cathode	1500	1875	43.9	9.64×10^6	0.698	0.059	0.041	175	WC66

1 Assembly supplied either as kit of parts or sub-assembly with selected diodes or thyristors.

W1
Weight 70 g

W2
Weight 80 g

W3
Weight 140 g

W4
Weight 340 g

W5
Weight 510 g

W6
Weight 1 kg

W37
Weight 510 g

W43
Weight 800 g

W54
Weight 530 g

W89
Weight 1.3 kg

W94
Weight 1.6 kg

W120
Weight 450 g

W121
Weight 330 g

W123
Weight 330 g

Rectifier Diodes – Capsule Types

Part Number	V_{RRM}	I_{FAV} $T_K = 55°C$	I_{FSM}	I^2t	V_{T0}	r_T	T_{JM}	R_{thJK}		Fig. No.
			10 ms ½ sine V_R - ≤60% V_{RRM}		@T_{JM}			180° Sine	120° Rect.	
	V	A	A	A^2s	V	mΩ	°C	K/W	K/W	
W0507YH420	4200	505	7600	289 × 10³	0.970	0.880	160	0.1000	0.1170	W3
W0507YH450	4500	505	7600	289 × 10³	0.970	0.880	160	0.1000	0.1170	W3
W0642WC160	1600	680	5500	151 × 10³	1.070	0.676	190	0.0900	0.0980	W1
W0642WC200	2000	680	5500	151 × 10³	1.070	0.676	190	0.0900	0.0980	W1
W0642WC240	2400	680	5500	151 × 10³	1.070	0.676	190	0.0900	0.0980	W1
W0790LG650	6500	790	6000	180 × 10³	0.919	1.249	150	0.0394	0.0445	W120
W0880LC620	6200	880	6000	180 × 10³	0.919	1.249	150	0.033	0.04	W4
W0880LC650	6500	880	6000	180 × 10³	0.919	1.249	150	0.033	0.04	W4
W0880LC680	6800	880	6000	180 × 10³	0.919	1.249	150	0.033	0.04	W4
W0925LG500	5000	925	7200	259 × 10³	1.000	0.702	150	0.0394	0.0445	W120
W0925LG560	5600	925	7200	259 × 10³	1.000	0.702	150	0.0394	0.0445	W120
W0925LG600	6000	925	7200	259 × 10³	1.000	0.702	150	0.0394	0.0445	W120
W0944WC120	1200	944	9000	405 × 10³	0.790	0.342	190	0.0900	0.0980	W1
W0944WC150	1500	944	9000	405 × 10³	0.790	0.342	190	0.0900	0.0980	W1
W1032LC500	5000	1032	7200	259 × 10³	1.000	0.702	150	0.0330	0.0400	W4
W1032LC560	5600	1032	7200	259 × 10³	1.000	0.702	150	0.0330	0.0400	W4
W1032LC600	6000	1032	7200	259 × 10³	1.000	0.702	150	0.0330	0.0400	W4
W1060LG420	4200	1060	9200	423 × 10³	1.000	0.575	160	0.0394	0.0445	W120
W1060LG450	4500	1060	9200	423 × 10³	1.000	0.575	160	0.0394	0.0445	W120
W1074YC200	2000	1074	10800	583 × 10³	0.920	0.390	160	0.0500	0.0610	W2
W1074YC260	2600	1074	10800	583 × 10³	0.920	0.390	160	0.0500	0.0610	W2
W1074YC320	3200	1074	10800	583 × 10³	0.920	0.390	160	0.0500	0.0610	W2
W1074YH200	2000	1074	10800	583 × 10³	0.920	0.390	160	0.0500	0.0610	W3
W1074YH260	2600	1074	10800	583 × 10³	0.920	0.390	160	0.0500	0.0610	W3
W1074YH320	3200	1074	10800	583 × 10³	0.920	0.390	160	0.0500	0.0610	W3
W1185LC420	4200	1185	9200	423 × 10³	1.000	0.575	160	0.0330	0.0393	W4
W1185LC450	4500	1185	9200	423 × 10³	1.000	0.575	160	0.0330	0.0393	W4
W1260LG320	3200	1260	10600	562 × 10³	0.900	0.388	160	0.0394	0.0445	W120
W1260LG360	3600	1260	10600	562 × 10³	0.900	0.388	160	0.0394	0.0445	W120
W1263YC160	1600	1263	11700	684 × 10³	0.870	0.330	175	0.0500	0.0610	W2
W1263YC220	2200	1263	11700	684 × 10³	0.870	0.330	175	0.0500	0.0610	W2
W1263YC250	2500	1263	11700	684 × 10³	0.870	0.330	175	0.0500	0.0610	W2
W1263YH160	1600	1263	11700	684 × 10³	0.870	0.330	175	0.0500	0.0610	W3
W1263YH200	2000	1263	11700	684 × 10³	0.870	0.330	175	0.0500	0.0610	W3

©2023 Littelfuse, Inc

Rectifier Diodes – Capsule Types

Part Number	V_{RRM}	I_{FAV} $T_K = 55°C$	I_{FSM}	I^2t	V_{T0}	r_T	T_{JM}	R_{thJK}		Fig. No.
			10 ms ½ sine V_R - ≤60% V_{RRM}		@T_{JM}			180° Sine	120° Rect.	
	V	A	A	A^2s	V	mΩ	°C	K/W	K/W	
W1263YH250	2500	1263	11700	684×10^3	0.870	0.330	175	0.0500	0.0610	W3
W1360LG240	2400	1360	12700	800×10^3	0.870	0.323	160	0.0394	0.0445	W120
W1360LG300	3000	1360	12700	800×10^3	0.870	0.323	160	0.0394	0.0445	W120
W1748LC180	1800	1748	15400	118×10^3	0.870	0.280	175	0.0330	0.0393	W4
W1748LC250	2500	1748	15400	118×10^3	0.870	0.280	175	0.0330	0.0393	W4
W1856NC400	4000	1856	16000	128×10^3	0.975	0.348	160	0.0220	0.0255	W5
W1856NC500	5000	1856	16000	128×10^3	0.975	0.348	160	0.0220	0.0255	W5
W1975MC620	6200	1975	18000	1.62 × 106	0.95	0.51	150	0.014	0.0158	W54
W1975MC650	6500	1975	18000	1.62×10^5	0.950	0.510	150	0.0140	0.0158	W54
W1975MC680	6800	1975	18000	1.62×10^6	0.950	0.510	150	0.0140	0.0158	W54
W2054NC420	4200	2054	19000	1.81×10^6	0.800	0.300	160	0.0220	0.0274	W5
W2054NC450	4500	2054	19000	1.81×10^6	0.800	0.300	160	0.0220	0.0274	W5
W2058LC100	1000	2058	19500	1.90×10^6	0.790	0.192	175	0.0330	0.0393	W4
W2058LC120	1200	2058	19500	1.90×10^6	0.790	0.192	175	0.0330	0.0393	W4
W2058LC140	1400	2058	19500	1.90×10^6	0.790	0.192	175	0.0330	0.0393	W4
W2115MC520	5200	2122	19000	1.81×10^6	1.074	0.405	150	0.0140	0.0158	W54
W2115MC560	5600	2122	19000	1.81×10^6	1.074	0.405	150	0.0140	0.0158	W54
W2115MC600	6000	2122	19000	1.81×10^6	1.074	0.405	150	0.0140	0.0158	W54
W2134NC360	3600	2134	20000	2.00×10^6	0.865	0.260	160	0.0220	0.0255	W5
W2134NC400	4000	2134	20000	2.00×10^6	0.865	0.260	160	0.0220	0.0255	W5
W2624NC240	2400	2624	28000	3.92×10^6	0.780	0.160	160	0.0220	0.0255	W5
W2624NC280	2800	2624	28000	3.92×10^6	0.780	0.160	160	0.0220	0.0255	W5
W2624ND240	2400	2624	28000	3.92×10^6	0.780	0.160	160	0.0220	0.0255	W37
W2624ND280	2800	2624	28000	3.92×10^6	0.780	0.160	160	0.0220	0.0255	W37
W2820VC420	4200	2820	26200	3.43×10^6	1.300	0.147	160	0.0160	0.0190	W6
W2820VC450	4500	2820	26200	3.43×10^6	1.300	0.147	160	0.0160	0.0190	W6
W2820VF420	4200	2820	26200	3.43×10^6	1.300	0.147	160	0.0160	0.0190	W43
W2820VF450	4500	2820	26200	3.43×10^6	1.300	0.147	160	0.0160	0.0190	W43
W2830HE520	5200	2830	32000	5.12×10^6	0.910	0.260	150	0.0123	0.0133	W123
W2830HE560	5600	2830	32000	5.12×10^6	0.910	0.260	150	0.0123	0.0133	W123
W2830HE600	6000	2830	32000	5.12×10^6	0.910	0.260	150	0.0123	0.0133	W123
W2865HA620	6200	2862	32400	5.25 × 106	0.982	0.308	150	0.0105	0.0116	W121
W2865HA650	6500	2862	32400	5.25 × 106	0.982	0.308	150	0.0105	0.0116	W121
W2865HA680	6800	2862	32400	5.25 × 106	0.982	0.308	150	0.0105	0.0116	W121
W2899MC460	4600	2899	25400	3.23×10^6	0.996	0.222	160	0.0140	0.0158	W54
W2899MC480	4800	2899	25400	3.23×10^6	0.996	0.222	160	0.0140	0.0158	W54
W3082MC420	4200	3120	26000	3.23×10^6	0.923	0.192	160	0.0140	0.0160	W54
W3082MC450	4500	3120	26000	3.23×10^6	0.923	0.192	160	0.0140	0.0160	W54
W3090HA520	5200	3110	32000	5.12×10^6	0.910	0.260	150	0.0105	0.0116	W121
W3090HA560	5600	3110	32000	5.12×10^6	0.910	0.260	150	0.0105	0.0116	W121
W3090HA600	6000	3110	32000	5.12×10^6	0.910	0.260	150	0.0105	0.0116	W121
W3128VC360	3600	3128	30000	5.12×10^6	0.875	0.158	160	0.0160	0.0190	W6
W3128VC400	4000	3128	30000	5.12×10^6	0.875	0.158	160	0.0160	0.0190	W6
W3128VF360	3600	3128	30000	4.50×10^6	0.875	0.158	160	0.0160	0.0190	W43
W3128VF400	4000	3128	30000	4.50×10^6	0.875	0.158	160	0.0160	0.0190	W43
W3270NC200	2000	3270	28000	3.92×10^6	0.826	0.104	175	0.0220	0.0255	W5
W3270NC220	2200	3270	28000	3.92×10^6	0.826	0.104	175	0.0220	0.0255	W5
W3270NC22A[1]	2200	3239	27600	3.81×10^6	0.818	0.108	175	0.0220	0.0255	W5
W3455QK200	2000	3455	20000	2.00×10^6	0.940	0.139	180	0.0170	0.0207	WD2
W3455QK220	2200	3455	20000	2.00×10^6	0.940	0.139	180	0.0170	0.0207	WD2
W3477MC360	3600	3470	28200	3.98×10^6	0.908	0.146	160	0.0140	0.0158	W54
W3477MC400	4000	3470	28200	3.98×10^6	0.908	0.146	160	0.0140	0.0158	W54
W3630TJ650	6500	3630	35000	6.125×10^6	0.916	0.262	150	0.0080	0.0085	W89
W3630TE650	6500	3630	35000	6.125×10^6	0.916	0.262	150	0.0080	0.0085	W94
W3697VC220	2200	3697	40000	8.00×10^6	0.860	0.100	160	0.0160	0.0190	W6
W3697VC280	2800	3697	40000	8.00×10^6	0.860	0.100	160	0.0160	0.0190	W6
W3697VF220	2200	3697	40000	8.00×10^6	0.860	0.100	160	0.0160	0.0190	W43
W3697VF280	2800	3697	40000	8.00×10^6	0.860	0.100	160	0.0160	0.0190	W43
W3708MC320	3200	3753	30000	4.50×10^6	0.958	0.112	160	0.0140	0.0158	W54

1 Avalanche Rated Diode

W5
Weight 510 g

W43
Weight 800 g

WD2
Weight 200 g

WD7
Weight 200 g

W6
Weight 1 kg

W54
Weight 530 g

WD3
Weight 270 g

W111
Weight 1.6 kg

W7
Weight 1.7 kg

W89
Weight 1.3 kg

WD5
Weight 1.2 kg

W112
Weight 2.1 kg

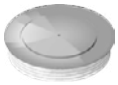
W42
Weight 1.2 kg

W94
Weight 1.6 kg

WD6
Weight 1.5 kg

Rectifier Diodes – Capsule Types

Part Number	V_{RRM}	I_{FAV} $T_K = 55°C$	I_{FSM}	I^2t	V_{T0}	r_T	T_{JM}	R_{thJK}		Fig. No.
			10 ms ½ sine V_R - ≤60% V_{RRM}		@T_{JM}			180° Sine	120° Rect.	
	V	A	A	A^2s	V	mΩ	°C	K/W	K/W	
W3708MC350	3500	3753	30000	4.50×10^6	0.958	0.112	160	0.0140	0.0158	W54
W3743ZC400	4000	3750	35000	6.13×10^6	0.976	0.170	160	0.0110	0.0132	W7
W3743ZC450	4500	3750	35000	6.13×10^6	0.976	0.170	160	0.0110	0.0132	W7
W3743ZC500	5000	3750	35000	6.13×10^6	0.976	0.170	160	0.0110	0.0132	W7
W3743ZD400	4000	3750	35000	6.13×10^6	0.976	0.170	160	0.0110	0.0132	W42
W3743ZD450	4500	3750	35000	6.13×10^6	0.976	0.170	160	0.0110	0.0132	W42
W3743ZD500	5000	3750	35000	6.13×10^6	0.976	0.170	160	0.0110	0.0132	W42
W3841VC300	3000	3841	39800	7.92×10^6	0.860	0.115	175	0.0160	0.0190	W6
W3841VC340	3400	3841	39800	7.92×10^6	0.860	0.115	175	0.0160	0.0190	W6
W3841VF300	3000	3841	39800	7.92×10^6	0.860	0.115	175	0.0160	0.0190	W43
W3841VF340	3400	3841	39800	7.92×10^6	0.860	0.115	175	0.0160	0.0190	W43
W3842MC240	2400	3842	35100	6.16×10^6	0.831	0.118	160	0.0140	0.0158	W54
W3842MC280	2800	3842	35100	6.16×10^6	0.831	0.118	160	0.0140	0.0158	W54
W3842MC28A [1]	2800	3842	35100	6.16×10^6	0.831	0.118	160	0.0140	0.0158	W54
W3864QK120	1200	3864	22200	2.46×10^6	0.861	0.109	180	0.0170	0.0210	WD2
W3864QK150	1500	3864	22200	2.46×10^6	0.861	0.109	180	0.0170	0.0210	WD2
W3864QK180	1800	3864	22200	2.46×10^6	0.861	0.109	180	0.0170	0.0210	WD2
W4096ZC420	4200	4096	41700	8.70×10^6	0.730	0.158	160	0.0110	0.0132	W7
W4096ZC450	4500	4096	41700	8.70×10^6	0.730	0.158	160	0.0110	0.0132	W7
W4096ZD420	4200	4096	41700	8.70×10^6	0.730	0.158	160	0.0110	0.0132	W42
W4096ZD450	4500	4096	41700	8.70×10^6	0.730	0.158	160	0.0110	0.0132	W42
W4205TJ520	5200	4205	45000	10.1×10^6	0.850	0.190	150	0.0080	0.0085	W89
W4205TJ560	5600	4205	45000	10.1×10^6	0.850	0.190	150	0.0080	0.0085	W89
W4205TJ600	6000	4205	45000	10.1×10^6	0.850	0.190	150	0.0080	0.0085	W89
W4205TE520	5200	4205	45000	10.1×10^6	0.850	0.190	150	0.0080	0.0085	W94
W4205TE560	5600	4205	45000	10.1×10^6	0.850	0.190	150	0.0080	0.0085	W94
W4205TE600	6000	4205	45000	10.1×10^6	0.850	0.190	150	0.0080	0.0085	W94
W4534NC030	300	4534	40000	8.00×10^6	0.765	0.052	190	0.0220	0.0255	W5
W4534NC060	600	4534	40000	8.00×10^6	0.765	0.052	190	0.0220	0.0255	W5
W4534ND030	300	4534	40000	8.00×10^6	0.765	0.052	190	0.0220	0.0255	W37
W4534ND060	600	4534	40000	8.00×10^6	0.765	0.052	190	0.0220	0.0255	W37
W4693QK050	500	4693	31500	4.98×10^6	0.904	0.057	180	0.0170	0.0207	WD2
W4693QK080	800	4693	31500	4.98×10^6	0.904	0.057	180	0.0170	0.0207	WD2
W4693QR050	500	4693	31500	4.98×10^6	0.904	0.057	180	0.0170	0.0207	WD7
W4693QR080	800	4693	31500	4.98×10^6	0.904	0.057	180	0.0170	0.0207	WD7

1 Avalanche Rated Diode

©2023 Littelfuse, Inc

Rectifier Diodes – Capsule Types

Part Number	V_{RRM}	I_{FAV} $T_K = 55°C$	I_{FSM}	I^2t	V_{T0}	r_T	T_{JM}	R_{thJK} 180° Sine	R_{thJK} 120° Rect.	Fig. No.
			10 ms ½ sine V_R - ≤60% V_{RRM}		@T_{JM}					
	V	A	A	A^2s	V	mΩ	°C	K/W	K/W	
W4713HL300	3000	4713	56000	15.70×10^6	0.807	0.090	160	0.0120	0.0132	WD5
W4713HL350	3500	4713	56000	15.70×10^6	0.807	0.090	160	0.0120	0.0132	WD5
W4713HM300	3000	4713	56000	15.70×10^6	0.807	0.090	160	0.0120	0.0132	WD6
W4713HM350	3500	4713	56000	15.70×10^6	0.807	0.090	160	0.0120	0.0132	WD6
W4767MC180	1800	4755	38000	7.22×10^6	0.827	0.083	175	0.0140	0.0158	W54
W4767MC220	2200	4755	38000	7.22×10^6	0.827	0.083	175	0.0140	0.0158	W54
W5092ZC320	3200	5092	58000	16.8×10^6	0.874	0.079	160	0.0110	0.0132	W7
W5092ZC350	3500	5092	58000	16.8×10^6	0.874	0.079	160	0.0110	0.0132	W7
W5092ZD320	3200	5092	58000	16.8×10^6	0.874	0.079	160	0.0110	0.0132	W42
W5092ZD350	3500	5092	58000	16.8×10^6	0.874	0.079	160	0.0110	0.0132	W42
W5130MK240	2400	5130	42000	8.82×10^6	0.910	0.070	175	0.0130	0.0149	WD3
W5130MK280	2800	5130	42000	8.82×10^6	0.910	0.070	175	0.0130	0.0149	WD3
W5139TJ450	4500	5139	55000	15.10×10^6	0.826	0.136	160	0.0080	0.0085	W89
W5139TJ480	4800	5139	55000	15.10×10^6	0.826	0.136	160	0.0080	0.0085	W89
W5139TE450	4500	5139	55000	15.10×10^6	0.826	0.136	160	0.0080	0.0085	W94
W5139TE480	4800	5139	55000	15.10×10^6	0.826	0.136	160	0.0080	0.0085	W94
W5282ZC240	2400	5282	60000	18.00×10^6	0.970	0.064	160	0.0110	0.0132	W7
W5282ZC300	3000	5282	60000	18.00×10^6	0.970	0.064	160	0.0110	0.0132	W7
W5282ZD240	2400	5282	60000	18.00×10^6	0.970	0.064	160	0.0110	0.0132	W42
W5282ZD300	3000	5282	60000	18.00×10^6	0.970	0.064	160	0.0110	0.0132	W42
W5334MK200	2000	5334	46800	10.95×10^6	0.892	0.069	180	0.0130	0.0149	WD3
W5334MK220	2200	5334	46800	10.95×10^6	0.892	0.069	180	0.0130	0.0149	WD3
W5636MC120	1200	5636	46000	10.58×10^6	0.698	0.059	175	0.0140	0.0160	W54
W5636MC150	1500	5636	46000	10.58×10^6	0.698	0.059	175	0.0140	0.0160	W54
W5696VC100	1000	5696	53000	14.00×10^6	0.650	0.059	190	0.0160	0.0190	W6
W5696VC140	1400	5696	53000	14.00×10^6	0.650	0.059	190	0.0160	0.0190	W6
W5696VF100	1000	5696	53000	14.00×10^6	0.650	0.059	190	0.0160	0.0190	W43
W5696VF140	1400	5696	53000	14.00×10^6	0.650	0.059	190	0.0160	0.0190	W43
W5715ED520	5200	5715	60600	18.36×10^6	0.863	0.135	150	0.0060	0.0063	W112
W5715ED560	5600	5715	60600	18.36×10^6	0.863	0.135	150	0.0060	0.0063	W112
W5715ED600	6000	5715	66000	18.36×10^6	0.863	0.135	150	0.0060	0.0063	W112
W5838ZC180	1800	5838	64000	20.50×10^6	0.800	0.074	175	0.0110	0.0132	W7
W5838ZC220	2200	5838	64000	20.50×10^6	0.800	0.074	175	0.0110	0.0132	W7
W5838ZD180	1800	5838	64000	20.50×10^6	0.800	0.074	175	0.0110	0.0132	W42
W5838ZD220	2200	5838	64000	20.50×10^6	0.800	0.074	175	0.0110	0.0132	W42
W5984TJ360	3600	5984	62000	19.20×10^6	0.758	0.097	160	0.0080	0.0085	W89
W5984TJ400	4000	5984	62000	19.20×10^6	0.758	0.097	160	0.0080	0.0085	W89
W5984TE360	3600	5984	62000	19.20×10^6	0.758	0.097	160	0.0080	0.0085	W94
W5984TE400	4000	5984	62000	19.20×10^6	0.758	0.097	160	0.0080	0.0085	W94
W6262ZC200	2000	6262	67000	22.40×10^6	0.730	0.064	175	0.0110	0.0132	W7
W6262ZC240	2400	6262	67000	22.40×10^6	0.730	0.064	175	0.0110	0.0132	W7
W6262ZD200	2000	6262	67000	22.40×10^6	0.730	0.064	175	0.0110	0.0132	W42
W6262ZD240	2400	6262	67000	22.40×10^6	0.730	0.064	175	0.0110	0.0132	W42
W6360EC520	5200	6360	60600	18.36×10^6	0.863	0.135	150	0.0050	0.0054	W111
W6360EC560	5600	6360	60600	18.36×10^6	0.863	0.135	150	0.0050	0.0054	W111
W6360EC600	6000	6360	66000	18.36×10^6	0.863	0.135	150	0.0050	0.0054	W111
W6672TE320	3200	6672	65700	21.58×10^6	0.864	0.067	160	0.0080	0.0085	W94
W6672TE350	3500	6672	65700	21.58×10^6	0.864	0.067	160	0.0080	0.0085	W94
W6672TJ320	3200	6672	65700	21.58×10^6	0.864	0.067	160	0.0080	0.0085	W89
W6672TJ350	3500	6672	65700	21.58×10^6	0.864	0.067	160	0.0080	0.0085	W89
W7045MC030	300	7045	54000	14.60×10^6	0.793	0.033	190	0.0140	0.0158	W54
W7045MC060	600	7045	54000	14.60×10^6	0.793	0.033	190	0.0140	0.0158	W54
W8405ZC100	1000	8405	72000	25.90×10^6	0.670	0.038	190	0.0110	0.0132	W7
W8405ZC140	1400	8405	72000	25.90×10^6	0.670	0.038	190	0.0110	0.0132	W7
W8405ZD100	1000	8405	72000	25.90×10^6	0.670	0.038	190	0.0110	0.0132	W42
W8405ZD140	1400	8405	72000	25.90×10^6	0.670	0.038	190	0.0110	0.0132	W42
W8570TJ180	1800	8570	70200	24.60×10^6	0.690	0.050	175	0.0080	0.0085	W89
W8570TJ220	2200	8570	70200	24.60×10^6	0.690	0.050	175	0.0080	0.0085	W89

W2
Weight 80 g

W3
Weight 140 g

W4
Weight 340 g

W5
Weight 510 g

W6
Weight 1 kg

W7
Weight 1.7 kg

W37
Weight 510 g

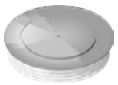
W42
Weight 1.2 kg

W43
Weight 800 g

W89
Weight 1.3 kg

W94
Weight 1.6 kg

W111
Weight 1.6 kg

W112
Weight 2.1 kg

W121
Weight 330 g

Rectifier Diodes – Capsule Types

Part Number	V_{RRM}	I_{FAV} $T_K = 55°C$	I_{FSM}	I^2t	V_{T0}	r_T	T_{JM}	R_{thJK}		Fig. No.
			10 ms ½ sine V_R - ≤60% V_{RRM}		@T_{JM}			180° Sine	120° Rect.	
	V	A	A	A^2s	V	mΩ	°C	K/W	K/W	
W8570TE180	1800	8570	70200	24.60×10^6	0.690	0.050	175	0.0080	0.0085	W94
W8570TE220	2200	8570	70200	24.60×10^6	0.690	0.050	175	0.0080	0.0085	W94
W9830TJ120	1200	9830	72000	25.90×10^6	0.670	0.043	190	0.0080	0.0085	W89
W9830TJ150	1500	9830	72000	25.90×10^6	0.670	0.043	190	0.0080	0.0085	W89
W9830TE120	1200	9830	72000	25.90×10^6	0.670	0.043	190	0.0080	0.0085	W94
W9830TE150	1500	9830	72000	25.90×10^6	0.670	0.043	190	0.0080	0.0085	W94
W106CEC240	2400	10650	92000	42.32×10^6	0.734	0.047	160	0.0050	0.0054	W111
W106CEC280	2800	10650	92000	42.32×10^6	0.734	0.047	160	0.0050	0.0054	W111
W108CED180	1800	11300	94500	44.65×10^6	0.678	0.039	175	0.0060	0.0063	W112
W108CED220	2200	11300	94500	44.65×10^6	0.678	0.039	175	0.0060	0.0063	W112
W121CEC180	1800	12650	94500	44.65×10^6	0.678	0.039	175	0.0050	0.0054	W111
W121CEC220	2200	12650	94500	44.65×10^6	0.678	0.039	175	0.0050	0.0054	W111

©2023 Littelfuse, Inc

Fast Recovery Diodes

Fast recovery diodes are an essential component of any switching device and are frequently the limiting factor in the design and performance of modern power converters. To address the needs of our customers, we have developed an unparalleled range of fast recovery diodes. These diodes are available with blocking voltages of up to 6.5 kV, making them suitable for operation with DC link voltages up to 3.3 kV and average current ratings to 3370A, depending upon type. The devices use both alloyed and floating silicon technologies to deliver robust devices that can be relied upon in demanding applications. This range has been subclassified as follows to facilitate appropriate device selection: Fast Recovery, Soft Recovery, Extra Fast Recovery Diodes, and HP Sonic-FRDs.

Standard Fast Recovery–Capsule Types

These parts are particularly suitable for use as anti-parallel diodes in Gate Turn-Off thyristors, Fast Thyristor inverters, and diodes for choppers.

Part Number	V_{RRM}	I_{FAV}	I_{FSM}	I^2t	Typ. Reverse Recovery				V_{TO}	r_T	T_{JM}	R_{thJK} d.c. 180° sine	Fig. No.
		T_K = 55°C	10 ms ½ sine V_R - ≤60% V_{RRM}		T_J = 150°C				@T_{JM} = 150°C				
					t_{rr}	Q_{rr}	@I_{FM}	@-di/dt					
	V	A	A	A^2s	µs	µC	A	A/µs	V	mΩ	°C	K/W	
M0588LC400	4000	588	3955	78.2×10^3	3.50	450	1000	60	2.320	1.770	150	0.0330	W4
M0588LC450	4500	588	3955	78.2×10^3	3.50	450	1000	60	2.320	1.770	150	0.0330	W4
M0790YC200	2000	790	9000	405×10^3	4.00	425	1000	60	1.272	0.584	150	0.0500	W2
M0790YC250	2500	790	9000	405×10^3	4.00	425	1000	60	1.272	0.584	150	0.0500	W2
M0790YH200	2000	790	9000	405×10^3	4.00	425	1000	60	1.272	0.584	150	0.0500	W3
M0790YH250	2500	790	9000	405×10^3	4.00	425	1000	60	1.272	0.584	150	0.0500	W3
M0914LC200	2000	914	8500	361×10^3	3.20	300	1000	60	1.768	0.653	150	0.0320	W4
M0914LC250	2500	914	8500	361×10^3	3.20	300	1000	60	1.768	0.653	150	0.0320	W4
M1010NC400	4000	1010	9600	461×10^3	3.20	1450	1000	200	1.700	1.030	150	0.0220	W5
M1010NC450	4500	1010	9600	461×10^3	3.20	1450	1000	200	1.700	1.030	150	0.0220	W5
M1010ND400	4000	1010	9600	461×10^3	3.20	1450	1000	200	1.700	1.030	150	0.0220	W37
M1010ND450	4500	1010	9600	461×10^3	3.20	1450	1000	200	1.700	1.030	150	0.0220	W37
M1163NC400	4000	1163	1v0800	583×10^3	6.40	1200	1000	60	1.500	0.770	150	0.0220	W5
M1163NC450	4500	1163	10800	583×10^3	6.40	1200	1000	60	1.500	0.770	150	0.0220	W5
M1163ND400	4000	1163	10800	583×10^3	6.40	1200	1000	60	1.500	0.770	150	0.0220	W37
M1163ND450	4500	1163	10800	583×10^3	6.40	1200	1000	60	1.500	0.770	150	0.0220	W37
M1502NC200	2000	1502	17000	1.45×10^6	3.50	350	1000	60	1.240	0.440	150	0.0220	W5
M1502NC250	2500	1502	17000	1.45×10^6	3.50	350	1000	60	1.240	0.440	150	0.0220	W5
M1502ND200	2000	1502	17000	1.45×10^6	3.50	350	1000	60	1.240	0.440	150	0.0220	W37
M1502ND250	2500	1502	17000	1.45×10^6	3.50	3v50	1000	60	1.240	0.440	150	0.0220	W37
M1583VC400	4000	1583	24800	3.08×10^6	5.00	2000	1000	200	1.693	0.525	150	0.0160	W6
M1583VC450	4500	1583	24800	3.08×10^6	5.00	2000	1000	200	1.693	0.525	150	0.0160	W6
M1583VF400	4000	1583	24800	3.08×10^6	5.00	2000	1000	200	1.693	0.525	150	0.0160	W43
M1583VF450	4500	1583	24800	3.08×10^6	5.00	2000	1000	200	1.693	0.525	150	0.0160	W43
M1609NC200	2000	1609	17500	1.53×10^6	3.20	800	1000	200	1.310	0.345	150	0.0220	W5
M1609NC260	2600	1609	17500	1.53×10^6	3.20	800	1000	200	1.310	0.345	150	0.0220	W5
M1609ND200	2000	1609	17500	1.53×10^6	3.20	800	1000	200	1.310	0.345	150	0.0220	W37
M1609ND260	2600	1609	17500	1.53×10^6	3.20	800	1000	200	1.310	0.345	150	0.0220	W37
M2273VC300	3000	2273	28000	3.92×10^6	8.50	2500	1000	60	1.239	0.244	150	0.0160	W6
M2273VC360	3600	2273	28000	3.92×10^6	8.50	2500	1000	60	1.239	0.244	150	0.0160	W6
M2273VF300	3000	2273	28000	3.92×10^6	8.50	2500	1000	60	1.239	0.244	150	0.0160	W43
M2273VF360	3600	2273	28000	3.92×10^6	8.50	2500	1000	60	1.239	0.244	150	0.0160	W43
M2325HA400	4000	2325	28000	3.92×10^6	5.40	2300	1000	200	1.581	0.402	150	0.0105	W121
M2325HA450	4500	2325	28000	3.92×10^6	5.40	2300	1000	200	1.581	0.402	150	0.0105	W121
M2408NC020	200	2408	24000	2.88×10^6	1.90	250	1000	200	1.065	0.122	150	0.0220	W5
M2408NC060	600	2408	24000	2.88×10^6	1.90	250	1000	200	1.065	0.122	150	0.0220	W5
M2408ND020	200	2408	24000	2.88×10^6	1.90	250	1000	200	1.065	0.122	150	0.0220	W37
M2408ND060	600	2408	24000	2.88×10^6	1.90	250	1000	200	1.065	0.122	150	0.0220	W37
M2639ZC360	3600	2639	27520	3.79×10^6	8.50	2300	1000	60	1.380	0.290	150	0.0110	W7
M2639ZC420	4200	2639	27520	3.79×10^6	8.50	2300	1000	60	1.380	0.290	150	0.0110	W7
M2639ZD360	3600	2639	27520	3.79×10^6	8.50	2300	1000	60	1.380	0.290	150	0.0110	W42
M2639ZD420	4200	2639	27520	3.79×10^6	8.50	2300	1000	60	1.380	0.290	150	0.0110	W42
M2698ZC250	2500	2698	27800	3.86×10^6	6.20	1200	1000	60	1.000	0.330	150	0.0110	W7

W6
Weight 1 kg

W7
Weight 1.7 kg

W42
Weight 1.2 kg

W43
Weight 800 g

W20
Weight 85 kg

W21
Weight 85 kg

W22
Weight 200 kg

W23
Weight 250 g

W24
Weight 250 g

Standard Fast Recovery–Capsule Types

These parts are particularly suitable for use as anti-parallel diodes in Gate Turn-Off thyristors, Fast Thyristor inverters, and diodes for choppers.

Part Number	V_{RRM}	I_{FAV} $T_K = 55°C$	I_{FSM} 10 ms ½ sine V_R - ≤60% V_{RRM}	I^2t	Typ. Reverse Recovery $T_J = 150°C$ t_{rr}	Q_{rr}	@I_{FM}	@ $-di_F/dt$	V_{T0} @T_{JM} = 150°C	r_T	T_{JM}	R_{thJK} d.c. 180° sine	Fig. No.
	V	A	A	A^2s	µs	µC	A	A/µs	V	mΩ	°C	K/W	
M2698ZC280	2800	2698	27800	3.86×10^6	6.20	1200	1000	60	1.000	0.330	150	0.0110	W7
M2698ZC350	3500	2698	27800	3.86×10^6	6.20	1200	1000	60	1.000	0.330	150	0.0110	W7
M2698ZD250	2500	2698	27800	3.86×10^6	6.20	1200	1000	60	1.000	0.330	150	0.0110	W42
M2698ZD280	2800	2698	27800	3.86×10^6	6.20	1200	1000	60	1.000	0.330	150	0.0110	W42
M2698ZD350	3500	2698	27800	3.86×10^6	6.20	1200	1000	60	1.000	0.330	150	0.0110	W42
M2837VC180	1800	2837	31800	5.10×10^6	7.00	2100	1000	60	0.900	0.170	150	0.0160	W6
M2837VC250	2500	2837	31800	5.10×10^6	7.00	2100	1000	60	0.900	0.170	150	0.0160	W6
M2837VF180	1800	2837	31800	5.10×10^6	7.00	2100	1000	60	0.900	0.170	150	0.0160	W43
M2837VF250	2500	2837	31800	5.10×10^6	7.00	2100	1000	60	0.900	0.170	150	0.0160	W43
M3770ZC200	2000	3770	44000	9.68×10^6	7.00	2000	1000	60	1.190	0.118	150	0.0110	W7
M3770ZC240	2400	3770	44000	9.68×10^6	7.00	2000	1000	60	1.190	0.118	150	0.0110	W7
M3770ZC300	3000	3770	44000	9.68×10^6	7.00	2000	1000	60	1.190	0.118	150	0.0110	W7
M3770ZD200	2000	3770	44000	9.68×10^6	7.00	2000	1000	60	1.190	0.118	150	0.0110	W7
M3770ZD240	2400	3770	44000	9.68×10^6	7.00	2000	1000	60	1.190	0.118	150	0.0110	W42
M3770ZD300	3000	3770	44000	9.68×10^6	7.00	2000	1000	60	1.190	0.118	150	0.0110	W42

©2023 Littelfuse, Inc

Soft Recovery Diodes

Our soft recovery diodes are available in a range of reverse recovery characteristics tailored to meet the requirements of both freewheeling and snubber applications. These devices are available with blocking voltages up to 6 kV and average currents up to 4305 A 24 mm to 75 mm diameter silicon slices. These parts are particularly suitable where soft recovery is required, such as in RCD snubbers, voltage clamping, and snubberless applications.

Soft Recovery Diodes – Stud Types

S

R

Part Number	V_{RRM}	I_{FAV} T_C = 55°C	I_{FSM}	I^2t	Typ. Reverse Recovery T_J = 150°C				V_{T0}	r_T	T_{JM}	R_{thJK} d.c. 180° sine	Fig. No.
			10 ms ½ sine V_R - ≤60% V_{RRM}		t_{rr}	Q_{rr}	@I_{FM}	@ -di_F/dt	@T_{JM}				
	V	A	A	A^2s	µs	µC	A	A/µs	V	mW	°C	K/W	
M0130RL200	2000	130	2240	25.0 × 10³	2.60	430	1000	150	1.290	1.540	125	0.3000	W20
M0130RL250	2500	130	2240	25.0 × 10³	2.60	430	1000	150	1.290	1.540	125	0.3000	W20
M0130SL200	2000	130	2240	25.0 × 10³	2.60	430	1000	150	1.290	1.540	125	0.3000	W20
M0130SL250	2500	130	2240	25.0 × 10³	2.60	430	1000	150	1.290	1.540	125	0.3000	W20
M0130RM200	2000	130	2240	25.0 × 10³	2.60	430	1000	150	1.290	1.540	125	0.3000	W21
M0130RM250	2500	130	2240	25.0 × 10³	2.60	430	1000	150	1.290	1.540	125	0.3000	W21
M0130SM200	2000	130	2240	25.0 × 10³	2.60	430	1000	150	1.290	1.540	125	0.3000	W21
M0130SM250	2500	130	2240	25.0 × 10³	2.60	430	1000	150	1.290	1.540	125	0.3000	W21
M0139RL120	1200	139	2450	30.0 × 10³	1.00	125	1000	100	1.240	1.280	125	0.3000	W20
M0139RL180	1800	139	2450	30.0 × 10³	1.00	125	1000	100	1.240	1.280	125	0.3000	W20
M0139SL120	1200	139	2450	30.0 × 10³	1.00	125	1000	100	1.240	1.280	125	0.3000	W20
M0139SL180	1800	139	2450	30.0 × 10³	1.00	125	1000	100	1.240	1.280	125	0.3000	W20
M0139RM120	1200	139	2450	30.0 × 10³	1.00	125	1000	100	1.240	1.280	125	0.3000	W21
M0139RM180	1800	139	2450	30.0 × 10³	1.00	125	1000	100	1.240	1.280	125	0.3000	W21
M0139SM120	1200	139	2450	30.0 × 10³	1.00	125	1000	100	1.240	1.280	125	0.3000	W21
M0139SM180	1800	139	2450	30.0 × 10³	1.00	125	1000	100	1.240	1.280	125	0.3000	W21
M0268RC200	2000	268	4250	90.3 × 10³	2.80	300	1000	150	1.210	1.200	125	0.1300	W24
M0268RC250	2500	268	4250	90.3 × 10³	2.80	300	1000	150	1.210	1.200	125	0.1300	W24
M0268SC200	2000	268	4250	90.3 × 10³	2.80	300	1000	150	1.210	1.200	125	0.1300	W24
M0268SC250	2500	268	4250	90.3 × 10³	2.80	300	1000	150	1.210	1.200	125	0.1300	W24
M0268RJ200	2000	268	4250	90.3 × 10³	2.80	300	1000	150	1.210	1.200	125	0.1300	W22
M0268RJ250	2500	268	4250	90.3 × 10³	2.80	300	1000	150	1.210	1.200	125	0.1300	W22
M0268SJ200	2000	268	4250	90.3 × 10³	2.80	300	1000	150	1.210	1.200	125	0.1300	W22
M0268SJ250	2500	268	4250	90.3 × 10³	2.80	300	1000	150	1.210	1.200	125	0.1300	W22
M0280RC200	2000	280	4500	100 × 10³	2.80	610	1000	150	1.280	0.920	125	0.1300	W24
M0280RC250	2500	280	4500	100 × 10³	2.80	610	1000	150	1.280	0.920	125	0.1300	W24
M0280SC200	2000	280	4500	100 × 10³	2.80	610	1000	150	1.280	0.920	125	0.1300	W24
M0280SC250	2500	280	4500	100 × 10³	2.80	610	1000	150	1.280	0.920	125	0.1300	W24
M0280RJ200	2000	280	4500	100 × 10³	2.80	610	1000	150	1.280	0.920	125	0.1300	W22
M0280RJ250	2500	280	4500	100 × 10³	2.80	610	1000	150	1.280	0.920	125	0.1300	W22
M0280SJ200	2000	280	4500	100 × 10³	2.80	610	1000	150	1.280	0.920	125	0.1300	W22
M0280SJ250	2500	280	4500	100 × 10³	2.80	610	1000	150	1.280	0.920	125	0.1300	W22
M0334RC120	1200	334	4500	101 × 10³	3.50	160	550	40	1.000	0.740	125	0.1300	W24
M0334RC200	2000	334	4500	101 × 10³	3.50	160	550	40	1.000	0.740	125	0.1300	W24
M0334SC120	1200	334	4500	101 × 10³	3.50	160	550	40	1.000	0.740	125	0.1300	W24
M0334SC200	2000	334	4500	101 × 10³	3.50	160	550	40	1.000	0.740	125	0.1300	W24
M0334RJ120	1200	334	4500	101 × 10³	3.50	160	550	40	1.000	0.740	125	0.1300	W22
M0334RJ200	2000	334	4500	101 × 10³	3.50	160	550	40	1.000	0.740	125	0.1300	W22
M0334SJ120	1200	334	4500	101 × 10³	3.50	160	550	40	1.000	0.740	125	0.1300	W22
M0334SJ200	2000	334	4500	101 × 10³	3.50	160	550	40	1.000	0.740	125	0.1300	W22
M0336RA120	1200	336	4500	101 × 10³	3.00	140	550	40	1.020	0.700	125	0.1300	W23
M0336RA140	1400	336	4500	101 × 10³	3.00	140	550	40	1.020	0.700	125	0.1300	W23
M0336SA120	1200	336	4500	101 × 10³	3.00	140	550	40	1.020	0.700	125	0.1300	W23
M0336SA140	1400	336	4500	101 × 10³	3.00	140	550	40	1.020	0.700	125	0.1300	W23

W1
Weight 70 g

W5
Weight 510 g

W42
Weight 1.2 kg

WD8
Weight 250 g

W2
Weight 80 g

W6
Weight 1 kg

W43
Weight 800 g

W3
Weight 140 g

W7
Weight 1.7 kg

W54
Weight 530 g

W4
Weight 340 g

W37
Weight 510 g

W89
Weight 1.3 kg

Standard Fast Recovery–Capsule Types

Part Number	V_{RRM}	I_{FAV} $T_K = 55°C$	I_{FSM}	I^2t	Typ. Reverse Recovery				V_{T0}	r_T	T_{JM}	R_{thJK} d.c. 180° sine	Fig. No.
			10 ms ½ sine V_R - ≤60% V_{RRM}		T_{JM}				@T_{JM}				
					t_{rr}	Q_{rr}	@I_{FM}	@ $-di_F/dt$					
	V	A	A	A^2s	µs	µC	A	A/µs	V	mW	°C	K/W	
M0225YH300	3000	225	2000	20 × 10³	3.00	220	550	40	1.900	4.160	150	0.1000	W3
M0225YH360	3600	225	2000	20 × 10³	3.00	220	550	40	1.900	4.160	150	0.1000	W3
M0225YH450	4500	225	2000	20 × 10³	3.00	220	550	40	1.900	4.160	150	0.1000	W3
M0310YH300	3000	310	4590	105 × 10³	2.80	275	1000	100	1.490	2.060	150	0.1000	W3
M0310YH350	3500	310	4590	105 × 10³	2.80	275	1000	100	1.490	2.060	150	0.1000	W3
M0347WC160	1600	347	4250	90.3 × 10³	2.80	210	550	40	1.210	1.200	125	0.0900	W1
M0347WC200	2000	347	4250	90.3 × 10³	2.80	210	550	40	1.210	1.200	125	0.0900	W1
M0347WC250	2500	347	4250	90.3 × 10³	2.80	210	550	40	1.210	1.200	125	0.0900	W1
M0358WC120	1200	358	2450	30 × 10³	1.40	125	1000	100	1.460	0.800	125	0.0900	W1
M0358WC180	1800	358	2450	30 × 10³	1.40	125	1000	100	1.460	0.800	125	0.0900	W1
M0367WC140	1400	367	4500	101 × 10³	3.30	300	550	40	1.280	0.920	125	0.0900	W1
M0367WC220	2200	367	4500	101 × 10³	3.30	300	550	40	1.280	0.920	125	0.0900	W1
M0367WC280	2800	367	4500	101 × 10³	3.30	300	550	40	1.280	0.920	125	0.0900	W1
M0371YH350	3500	371	4900	120 × 10³	3.20	1260	1000	200	1.050	1.650	150	0.1000	W3
M0371YH450	4500	371	4900	120 × 10³	3.20	1260	1000	200	1.050	1.650	150	0.1000	W3
M0433WC120	1200	433	4500	101 × 10³	3.50	270	550	40	1.000	0.740	125	0.0900	W1
M0433WC160	1600	433	4500	101 × 10³	3.50	270	550	40	1.000	0.740	125	0.0900	W1
M0433WC200	2000	433	4500	101 × 10³	3.50	270	550	40	1.000	0.740	125	0.0900	W1
M0437WC080	800	437	4500	101 × 10³	3.00	75	550	40	1.020	0.700	125	0.0900	W1
M0437WC140	1400	437	4500	101 × 10³	3.00	75	550	40	1.020	0.700	125	0.0900	W1
M0451YC120	1200	451	4500	101 × 10³	2.80	120	550	40	1.000	0.740	125	0.0850	W2
M0451YC160	1600	451	4500	101 × 10³	2.80	120	550	40	1.000	0.740	125	0.0850	W2
M0451YC200	2000	451	4500	101 × 10³	2.80	120	550	40	1.000	0.740	125	0.0850	W2
M0659LC400	4000	659	7620	290 × 10³	4.20	800	1000	60	1.710	0.925	125	0.0330	W4
M0659LC450	4500	659	7620	290 × 10³	4.20	800	1000	60	1.710	0.925	125	0.0330	W4
M0710LC560	5600	710	8400	353 × 10³	4.00	2100	1000	200	1.450	0.875	125	0.0330	W4
M0710LC600	6000	710	8400	353 × 10³	4.00	2100	1000	200	1.450	0.875	125	0.0330	W4
M0736LC400	4000	736	9000	405 × 10³	5.20	1250	1000	60	1.606	0.700	125	0.0330	W4
M0736LC450	4500	736	9000	405 × 10³	5.20	1250	1000	60	1.606	0.700	125	0.0330	W4
M0759YC120	1200	759	9500	450 × 10³	2.00	80	550	50	1.130	0.380	125	0.0500	W2
M0759YC160	1600	759	9500	450 × 10³	2.00	80	550	50	1.130	0.380	125	0.0500	W2
M0759YH120	1200	759	9500	450 × 10³	2.00	80	550	50	1.130	0.380	125	0.0500	W3
M0759YH160	1600	759	9500	450 × 10³	2.00	80	550	50	1.130	0.380	125	0.0500	W3
M0859LC140	1400	859	10000	500 × 10³	3.00	280	800	50	1.170	0.320	125	0.0440	W4
M0859LC160	1600	859	10000	500 × 10³	3.00	280	800	50	1.170	0.320	125	0.0440	W4
M0859LC180	1800	859	10000	500 × 10³	3.00	280	800	50	1.170	0.320	125	0.0440	W4

©2023 Littelfuse, Inc

Standard Fast Recovery–Capsule Types

Part Number	V_{RRM}	I_{FAV} $T_K = 55°C$	I_{FSM}	I^2t	Typ. Reverse Recovery				V_{T0}	r_T	T_{JM}	R_{thJK} d.c. 180° sine	Fig. No.
			10 ms ½ sine V_R - ≤60% V_{RRM}		T_{JM}				@T_{JM}				
					t_{rr}	Q_{rr}	@I_{FM}	@ $-di_F/dt$					
	V	A	A	A^2s	µs	µC	A	A/µs	V	mW	°C	K/W	
M0863LC260	2600	863	10000	500×10^3	4.80	950	1000	60	1.308	0.538	125	0.0330	W4
M0863LC300	3000	863	10000	500×10^3	4.80	950	1000	60	1.308	0.538	125	0.0330	W4
M0863LC360	3600	863	10000	500×10^3	4.80	950	1000	60	1.308	0.538	125	0.0330	W4
M0872LC140	1400	872	10000	500×10^3	4.00	700	1000	60	1.090	0.340	125	0.0440	W4
M0872LC180	1800	872	10000	500×10^3	4.00	700	1000	60	1.090	0.340	125	0.0440	W4
M0872LC210	2100	872	10000	500×10^3	4.00	700	1000	60	1.090	0.340	125	0.0440	W4
M0955LC200	2000	955	11700	684×10^3	3.40	500	1000	60	1.440	0.330	125	0.0330	W4
M0955LC250	2500	955	11700	684×10^3	3.40	500	1000	60	1.440	0.330	125	0.0330	W4
M1022LC120	1200	1022	14000	980×10^3	3.00	375	1000	60	1.240	0.330	125	0.0330	W4
M1022LC160	1600	1022	14000	980×10^3	3.00	375	1000	60	1.240	0.330	125	0.0330	W4
M1022LC200	2000	1022	14000	980×10^3	3.00	375	1000	60	1.240	0.330	125	0.0330	W4
M1080LC100	1000	1080	13500	910×10^3	1.90	85	1000	60	1.125	0.314	125	0.0330	W4
M1080LC120	1200	1080	13500	910×10^3	1.90	85	1000	60	1.125	0.314	125	0.0330	W4
M1102NC500	5000	1102	13000	845×10^3	5.50	3300	1000	200	1.360	0.557	125	0.0220	W5
M1102NC600	6000	1102	13000	845×10^3	5.50	3300	1000	200	1.360	0.557	125	0.0220	W5
M1102ND500	5000	1102	13000	845×10^3	5.50	3300	1000	200	1.360	0.557	125	0.0220	W37
M1102ND600	6000	1102	13000	845×10^3	5.50	3300	1000	200	1.360	0.557	125	0.0220	W37
M1104NC400	4000	1104	13000	845×10^3	6.00	2100	1000	60	1.370	0.553	125	0.0220	W5
M1104NC450	4500	1104	13000	845×10^3	6.00	2100	1000	60	1.370	0.553	125	0.0220	W5
M1104ND400	4000	1104	13000	845×10^3	6.00	2100	1000	60	1.370	0.553	125	0.0220	W37
M1104ND450	4500	1104	13000	845×10^3	6.00	2100	1000	60	1.370	0.553	125	0.0220	W37
M1242NC260	2600	1242	16400	1.34×10^6	6.00	1500	1000	60	1.270	0.420	125	0.0220	W5
M1242NC360	3600	1242	16400	1.34×10^6	6.00	1500	1000	60	1.270	0.420	125	0.0220	W5
M1242ND260	2600	1242	16400	1.34×10^6	6.00	1500	1000	60	1.270	0.420	125	0.0220	W37
M1242ND360	3600	1242	16400	1.34×10^6	6.00	1500	1000	60	1.270	0.420	125	0.0220	W37
M1494NC160	1600	1494	19600	1.92×10^6	3.90	815	1000	60	1.150	0.265	125	0.0220	W5
M1494NC250	2500	1494	19600	1.92×10^6	3.90	815	1000	60	1.150	0.265	125	0.0220	W5
M1494ND160	1600	1494	19600	1.92×10^6	3.90	815	1000	60	1.150	0.265	125	0.0220	W37
M1494ND250	2500	1494	19600	1.92×10^6	3.90	815	1000	60	1.150	0.265	125	0.0220	W37
M1494NK160	1600	1494	19600	1.92×10^6	3.90	815	1000	60	1.150	0.265	125	0.0145	WD8
M1494NK250	2500	1494	19600	1.92×10^6	3.90	815	1000	60	1.150	0.265	125	0.0145	WD8
M1565VC400	4000	1565	19700	1.94×10^6	5.00	4000	1000	200	1.090	0.360	125	0.0180	W6
M1565VC450	4500	1565	19700	1.94×10^6	5.00	4000	1000	200	1.090	0.360	125	0.0180	W6
M1565VF400	4000	1565	19700	1.94×10^6	5.00	4000	1000	200	1.090	0.360	125	0.0180	W43
M1565VF450	4500	1565	19700	1.94×10^6	5.00	4000	1000	200	1.090	0.360	125	0.0180	W43
M1858NC100	1000	1858	25000	3.25×10^6	2.50	120	1000	60	1.127	0.127	125	0.0220	W5
M1858NC120	1200	1858	25000	3.25×10^6	2.50	120	1000	60	1.127	0.127	125	0.0220	W5
M1858ND120	1200	1858	25000	3.25×10^6	2.50	120	1000	60	1.127	0.127	125	0.0220	W37
M1858ND100	1000	1858	25000	3.25×10^6	2.50	120	1000	60	1.127	0.127	125	0.0220	W37
M2322ZC300	3000	2322	23000	2.64×10^6	6.50	3200	1000	150	1.670	0.186	125	0.0110	W7
M2322ZC400	4000	2322	23000	2.64×10^6	6.50	3200	1000	150	1.670	0.186	125	0.0110	W7
M2322ZD300	3000	2322	23000	2.64×10^6	6.50	3200	1000	150	1.670	0.186	125	0.0110	W42
M2322ZD400	4000	2322	23000	2.64×10^6	6.50	3200	1000	150	1.670	0.186	125	0.0110	W42
M2413VC200	2000	2413	32000	5.12×10^6	5.00	2500	1000	200	1.090	0.121	125	0.0160	W6
M2413VC250	2500	2413	32000	5.12×10^6	5.00	2500	1000	200	1.090	0.121	125	0.0160	W6
M2413VF200	2000	2413	32000	5.12×10^6	5.00	2500	1000	200	1.090	0.121	125	0.0160	W43
M2413VF250	2500	2413	32000	5.12×10^6	5.00	2500	1000	200	1.090	0.121	125	0.0160	W43
M2505MC220	2200	2505	27000	3.65×10^6	7.60	1950	2000	60	0.991	0.162	125	0.0140	W54
M2505MC250	2500	2505	27000	3.65×10^6	7.60	1950	2000	60	0.991	0.162	125	0.0140	W54
M3560TJ420	4200	3560	36000	6.48×10^6	7.00	4100	1000	150	1.253	0.137	125	0.0080	W89
M3560TJ450	4500	3560	36000	6.48×10^6	7.00	4100	1000	150	1.253	0.137	125	0.0080	W89
M4305TJ240	2400	4305	49000	12.0×10^6	5.00	2500	1000	150	1.104	0.087	125	0.0080	W89
M4305TJ280	2800	4305	49000	12.0×10^6	5.00	2500	1000	150	1.104	0.087	125	0.0080	W89

Extra Fast Recovery Diodes

These products are designed to offer the lowest practical values of reverse recovery current while offering the wide safe operating area and high di/dt capability required by modern switching parts.

W1
Weight 70 g

W2
Weight 80 g

W3
Weight 140 g

W4
Weight 340 g

W5
Weight 510 g

W6
Weight 1 kg

W43
Weight 800 g

W47
Weight 250 g

W54
Weight 530 g

W59
Weight 2.25 kg

W89
Weight 1.3 kg

W111
Weight 1.6 kg

W117
Weight 330 g

W122
Weight 1.2 kg

W126
Weight 1.15 kg

Extra Fast Recovery Diodes—Capsule Types

Part Number	V_{RRM}	I_{FAV}	I_{FSM}	I^2t	Typ. Reverse Recovery					V_{T0}	r_T	T_{JM}	R_{thJK} d.c. 180° sine	Fig. No.
		T_K = 55°C	10 ms ½ sine V_R - ≤60% V_{RRM}		T_{JM}					@T_{JM}				
					I_{rm}	t_{rr}	Q_{rr}	@I_{FM}	@ -di_F/dt					
	V	A	A	A^2s	A	µs	µC	A	A/µs	V	mΩ	°C	K/W	
F0240YC250	2500	240	3100	48.1×10^3	40	2.00	100	550	40	2.271	2.853	150	0.1000	W2
F0240YC300	3000	240	3100	48.1×10^3	40	2.00	100	550	40	2.271	2.853	150	0.1000	W2
F0240YH250	2500	240	3100	48.1×10^3	40	2.00	100	550	40	2.271	2.853	150	0.1000	W3
F0240YH300	3000	240	3100	48.1×10^3	40	2.00	100	550	40	2.271	2.853	150	0.1000	W3
F0300WC140	1400	240	2700	36.5×10^3	530	3.00	70	550	40	1.760	2.210	125	0.0950	W1
F0300WC180	1800	240	2700	36.5×10^3	530	3.00	70	550	40	1.760	2.210	125	0.0950	W1
F0800LC140	1400	775	7630	291×10^3	380	1.10	200	1000	200	1.494	0.692	125	0.0320	W4
F0800LC180	1800	775	7630	291×10^3	380	1.10	200	1000	200	1.494	0.692	125	0.0320	W4
F0900VC450	4500	816	10450	546×10^3	120	3.80	230	1000	60	2.024	1.274	115	0.0160	W6
F0900VC520	5200	816	10450	546×10^3	120	3.80	230	1000	60	2.024	1.274	115	0.0160	W6
F0900VF450	4500	816	10450	546×10^3	120	3.80	230	1000	60	2.024	1.274	115	0.0160	W43
F0900VF520	5200	816	10450	546×10^3	120	3.80	230	1000	60	2.024	1.274	115	0.0160	W43
F1000LC080	800	826	8500	361×10^3	320	1.60	250	1000	800	1.530	0.547	125	0.0320	W4
F1000LC120	1200	826	8500	361×10^3	320	1.60	250	1000	800	1.530	0.547	125	0.0320	W4
F1300NC45P	4500	1346	20800	2.16×10^6	470	4.30	2150	1000	200	1.569	0.318	140	0.0240	W5
F1300NC50P	5000	1346	20800	2.16×10^6	470	4.30	2150	1000	200	1.569	0.318	140	0.0240	W5
F1300NC55P	5500	1346	20800	2.16×10^6	470	4.30	2150	1000	200	1.569	0.318	140	0.0240	W5
F1400NC140	1400	1093	17250	1.49×10^6	800	1.50	1000	1400	1000	1.618	0.388	125	0.0240	W5
F1400NC180	1800	1093	17250	1.49×10^6	800	1.50	1000	1400	1000	1.618	0.388	125	0.0240	W5
F1500NC200	2000	1054	13750	950×10^3	1065	1.50	1500	1500	2000	1.372	0.535	125	0.0240	W5
F1500NC250	2500	1054	13750	950×10^3	1065	1.50	1500	1500	2000	1.372	0.535	125	0.0240	W5
F1600NC080	800	1326	20000	2.0×10^6	480	2.30	700	1600	800	1.320	0.268	125	0.0240	W5
F1600NC120	1200	1326	20000	2.0×10^6	480	2.30	700	1600	800	1.320	0.268	125	0.0240	W5

©2023 Littelfuse, Inc

High-Power Sonic FRDs

IXYS UK brings you a world-leading class of ultra fast and ultra soft recovery diode available from 3.3 kV to 6.5 kV in current ratings from 500 A to 4000 A. These diodes incorporate a unique manufacturing process and lifetime control to offer a class-leading trade-off between conduction and Switching losses. The wide safe operating area (SOA) makes them ideal as freewheeling diodes for snubberless IGBT and IGCT applications or any application that requires a fast, low loss diode (e.g., traction, medium voltage drives, induction heating, and pulsed power applications).

High-Power Sonic FRD's—Capsule Type

Part Number	V_{RRM}	I_{FAV}	I_{FSM}	I^2t	Typ. Reverse Recovery					V_{T0}	r_T	T_{JM}	R_{thJK} 180° sine	Fig. No.
		T_K = 55°C	10 ms ½ sine V_R - ≤60% V_{RRM}		T_{JM}					@T_{JM}				
					I_{rm}	t_{rr}	Q_{rr}	@I_{FM}	@ -di_F/dt					
	V	A	A	A^2s	A	µs	µC	A	A/µs	V	mΩ	°C	K/W	
E0460QC45E	4500	533	6800	231×10^3	460	1.15	685	500	1000	2.246	2.716	140	0.0274	W117
E0660NC45E	4500	760	9160	420×10^3	700	1.10	1050	660	1500	2.194	1.814	140	0.0200	W5
E0660NH45E	4500	760	9160	420×10^3	700	1.10	1050	660	1500	2.194	1.814	140	0.0200	W47
E1250HC45E	4500	1355	20500	2.11×10^6	1000	1.20	1850	1250	2000	2.072	1.166	140	0.0105	W122
E1500MC33E	3300	1580	17330	1.5×10^6	1380	1.85	2040	1500	2000	1.509	0.464	140	0.0162	W54
E1500NC36P	3600	1280	17050	1.45×10^6	1425	2.80	2750	1000	1000	1.417	0.656	140	0.0190	W5
E1500NC42P	4200	1280	17050	1.45×10^6	1425	2.80	2750	1000	1000	1.417	0.656	140	0.0190	W5
E1500NC48P	4800	1280	17050	1.45×10^6	1425	2.80	2750	1000	1000	1.417	0.656	140	0.0190	W5
E1500NH36P	3600	1280	17050	1.45×10^6	1425	2.80	2750	1000	1000	1.417	0.656	140	0.0190	W47
E1500NH42P	4200	1280	17050	1.45×10^6	1425	2.80	2750	1000	1000	1.417	0.656	140	0.0190	W47
E1500NH48P	4800	1280	17050	1.45×10^6	1425	2.80	2750	1000	1000	1.417	0.656	140	0.0190	W47
E1780TG65E	6500	1780	25600	3.29×10^6	1590	1.22	3500	1375	3500	2.200	0.917	140	0.0770	W126
E1800TC45E	4500	2215	29050	4.22×10^6	1490	1.15	2800	1800	3000	2.171	0.634	140	0.0068	W89
E2400EC45E	4500	2490	32100	5.15×10^6	2130	1.22	3900	2400	4000	2.114	0.646	140	0.0056	W111
E3000EC33E	3300	4314	58600	17.2×10^6	3600	1.87	6150	3000	5500	1.544	0.185	140	0.0056	W111
E3000EC45E	4500	3410	45700	10.5×10^6	3050	1.25	5000	3000	5000	2.124	0.339	140	0.0050	W111
E4000FD45E	4500	4210	54800	15.0×10^6	3650	1.50	5750	4000	5000	2.117	0.351	140	0.0035	W59

Phase Control Thyristors

IXYS UK provides one of the most comprehensive ranges of standard phase control thyristors in the industry. Devices with voltage ranges from 200 V to 5200 V are available, making them suitable for applications with line voltages from 230 V to over 1000 V (higher voltage applications are now served by our range of medium voltage thyristors). IXYS UK Westcode Ltd. is a leading supplier of phase control products for markets such as demanding industrial DC drives, controlled rectifiers, marine/rail propulsion systems, wind power converters, electrochemical power supplies, and soft starters. These devices are optimized to generate low conduction losses and are primarily intended for applications with line frequencies of up to 400 Hz.

The Wespack outline (WPxx) is an innovative concept in phase control thyristors for applications requiring devices rated to 2200 V. It gives the maximum power rating for weight and volume without compromising on quality and reliability. It also gives the maximum current rating and lowest thermal resistance for the package size.

The newest additions to IXYS UK's phase control thyristor range are the 96 mm diameter die capsules. These devices are constructed using low temperature sintering technology offering better thermal and electromechanical capability and are available with current ratings up to 6405 A and voltage ratings up to 4500 V.

W8
Weight 70 g

W12
Weight 1 kg

W70
Weight 550 g

WP6
Weight 330 g

W10
Weight 340 g

W58
Weight 90 g

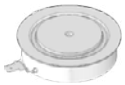
WP1
Weight 180 g

W17
Weight 130 g

W11
Weight 510 g

W62
Weight 1 kg

WP2
Weight 200 g

W18
Weight 280 g

Phase Control Thyristors–Stud Types

Part Number	V_{DRM} V_{RRM}	I_{TAV}	I_{TSM}	I^2t	V_{T0}	r_T	T_{JM}	R_{thJC}		Fig. No.
		T_C = 55°C	10 ms ½ sine V_R - ≤60% V_{RRM}		@T_{JM}			d.c. 180° sine	120° Rect.	
	V	A	A	A^2S	V	mΩ	°C	K/W	K/W	
N0180SH120	1200	180	2450	30.0×10^3	0.900	1.790	125	0.2300	0.2800	W17
N0180SH160	1600	180	2450	30.0×10^3	0.900	1.790	125	0.2300	0.2800	W17
N0335SC120	1200	335	4650	108×10^3	0.920	0.990	125	0.1200	0.1400	W18
N0335SC160	1600	335	4650	108×10^3	0.920	0.990	125	0.1200	0.1400	W18
N0416SC040	400	416	6000	180×10^3	0.850	0.535	125	0.1200	0.1400	W18
N0416SC080	800	416	6000	180×10^3	0.850	0.535	125	0.1200	0.1400	W18

Phase Control Thyristors–Capsule Types

Part Number	V_{DRM} V_{RRM}	I_{TAV}	I_{TSM}	I^2t	V_{T0}	r_T	T_{JM}	R_{thJC}		Fig. No.
		T_k = 55°C	10 ms ½ sine V_R - ≤60% V_{RRM}		@T_{JM}			d.c. 180° sine	120° Rect.	
	V	A	A	A^2S	V	mΩ	°C	K/W	K/W	
N0392WC120	1200	392	4650	108×10^3	0.920	0.990	125	0.0950	0.1100	W8
N0392WC160	1600	392	4650	108×10^3	0.920	0.990	125	0.0950	0.1100	W8
N0606YC200	2000	606	7100	252×10^3	1.103	0.804	125	0.0500	0.0580	W58
N0606YC250	2500	606	7100	252×10^3	1.103	0.804	125	0.0500	0.0580	W58
N0616LC400	4000	616	5250	138×10^3	1.220	1.530	125	0.0320	0.0393	W10
N0616LC450	4500	616	5250	138×10^3	1.220	1.530	125	0.0320	0.0393	W10
N0634LC380	3800	634	7000	245×10^3	1.100	1.500	125	0.0320	0.0393	W10
N0634LC420	4200	634	7000	245×10^3	1.100	1.500	125	0.0320	0.0393	W10
N0646LC300	3000	646	5700	162×10^3	1.210	1.360	125	0.0320	0.0393	W10
N0646LC360	3600	646	5700	162×10^3	1.210	1.360	125	0.0320	0.0393	W10

©2023 Littelfuse, Inc

Phase Control Thyristors–Capsule Types

Part Number	V_{DRM} V_{RRM}	I_{TAV}	I_{TSM}	I^2t	V_{T0}	r_T	T_{JM}	R_{thJC}		Fig. No.
		T_k = 55°C	10 ms ½ sine V_R - ≤60% V_{RRM}		@T_{JM}			d.c. 180° sine	120° Rect.	
	V	A	A	A^2S	V	mΩ	°C	K/W	K/W	
N0676YC120	1200	676	7500	281×10^3	1.090	0.587	125	0.0500	0.0580	W58
N0676YC180	1800	676	7500	281×10^3	1.090	0.587	125	0.0500	0.0580	W58
N0734YC120	1200	734	8400	353×10^3	1.03	0.483	125	0.0500	0.0580	W58
N0734YC160	1600	734	8400	353×10^3	1.03	0.483	125	0.0500	0.0580	W58
N0882NC400	4000	882	7700	296×10^3	1.300	0.920	125	0.0240	0.0273	W11
N0882NC450	4500	882	7700	296×10^3	1.300	0.920	125	0.0240	0.0273	W11
N0910LC200	2000	910	9200	423×10^3	1.040	0.606	125	0.0320	0.0393	W10
N0910LC260	2600	910	9200	423×10^3	1.040	0.606	125	0.0320	0.0393	W10
N0910LC280	2800	910	9200	423×10^3	1.040	0.606	125	0.0320	0.0393	W10
N1010NC300	3000	1010	12100	732×10^3	1.170	0.687	125	0.0240	0.0273	W11
N1010NC380	3800	1010	12100	732×10^3	1.170	0.687	125	0.0240	0.0273	W11
N1052LC200	2000	1052	13200	870×10^3	1.000	0.416	125	0.0320	0.0393	W10
N1052LC220	2200	1052	13200	870×10^3	1.000	0.416	125	0.0320	0.0393	W10
N1114LC120	1200	1114	12700	806×10^3	1.000	0.349	125	0.0320	0.0393	W10
N1114LC180	1800	1114	12700	806×10^3	1.000	0.349	125	0.0320	0.0393	W10
N1132NC300	3000	1132	14300	1.02×10^6	1.150	0.510	125	0.0240	0.0271	W11
N1132NC340	3400	1132	14300	1.02×10^6	1.150	0.510	125	0.0240	0.0271	W11
N1132NC360	3600	1132	14300	1.02×10^6	1.150	0.510	125	0.0240	0.0271	W11
N1159NC380	3800	1159	14500	1.05×10^6	1.100	0.574	125	0.0220	0.0255	W11
N1159NC420	4200	1159	14500	1.05×10^6	1.100	0.574	125	0.0220	0.0255	W11
N1174JK200	2000	1174	13200	870×10^3	1.000	0.416	125	0.0270	0.0314	WP1
N1174JK220	2200	1174	13200	870×10^3	1.000	0.416	125	0.0270	0.0314	WP1
N1263JK160	1600	1263	15000	1.13×10^6	1.015	0.332	125	0.0270	0.0314	WP1
N1263JK180	1800	1263	15000	1.13×10^6	1.015	0.332	125	0.0270	0.0314	WP1
N1351VC400	4000	1351	17500	1.53×10^6	1.200	0.553	125	0.0170	0.0206	W12
N1351VC450	4500	1351	17500	1.53×10^6	1.200	0.553	125	0.0170	0.0206	W12
N1351VF400	4000	1351	17500	1.53×10^6	1.200	0.553	125	0.0170	0.0206	W62
N1351VF450	4500	1351	17500	1.53×10^6	1.200	0.553	125	0.0170	0.0206	W62
N1366JK080	800	1366	15900	1.26×10^6	0.985	0.270	125	0.0270	0.0314	WP1
N1366JK120	1200	1366	15900	1.26×10^6	0.985	0.270	125	0.0270	0.0314	WP1
N1366JK140	1400	1366	15900	1.26×10^6	0.985	0.270	125	0.0270	0.0314	WP1
N1449QL200	2000	1410	17300	1.50×10^6	1.060	0.317	125	0.0230	0.0272	WP6
N1449QL220	2200	1410	17300	1.50×10^6	1.060	0.317	125	0.0230	0.0272	WP6
N1467NC200	2000	1467	21500	2.31×10^6	1.000	0.272	125	0.0240	0.0271	W11
N1467NC260	2600	1467	21500	2.31×10^6	1.000	0.272	125	0.0240	0.0271	W11
N1547NC160	1600	1547	23300	2.71×10^6	0.920	0.252	125	0.0240	0.0271	W11
N1547NC200	2000	1547	23300	2.71×10^6	0.920	0.252	125	0.0240	0.0271	W11
N1581QL160	1600	1535	19100	1.82×10^6	1.022	0.253	125	0.0230	0.0270	WP6
N1581QL180	1800	1535	19100	1.82×10^6	1.022	0.253	125	0.0230	0.0270	WP6
N1651QK200	2000	1651	17300	1.50×10^6	1.060	0.317	125	0.0180	0.0217	WP2
N1651QK220	2200	1651	17300	1.50×10^6	1.060	0.317	125	0.0180	0.0217	WP2
N1661VC300	3000	1661	23000	2.65×10^6	1.040	0.350	125	0.0170	0.0206	W12
N1661VC360	3600	1661	23000	2.65×10^6	1.040	0.350	125	0.0170	0.0206	W12
N1661VF300	3000	1661	23000	2.65×10^6	1.040	0.350	125	0.0170	0.0206	W62
N1661VF360	3600	1661	23000	2.65×10^6	1.040	0.350	125	0.0170	0.0206	W62
N1718NC120	1200	1718	27200	3.70×10^6	0.979	0.169	125	0.0240	0.0271	W11
N1718NC180	1800	1718	27200	3.70×10^6	0.979	0.169	125	0.0240	0.0271	W11
N1718NC200	2000	1718	27200	3.70×10^6	0.979	0.169	125	0.0240	0.0271	W11
N1725MC320	3200	1725	20000	2.00×10^6	1.022	0.396	125	0.0150	0.0165	W70

W11
Weight 510 g

W12
Weight 1 kg

W13
Weight 1.7 kg

W46
Weight 1.2 kg

W62
Weight 1 kg

W70
Weight 550 g

W79
Weight 890 g

W80
Weight 1.2 kg

W81
Weight 1.2 kg

W82
Weight 1.65 kg

WP1
Weight 180 g

WP2
Weight 200 g

WP3
Weight 260 g

WP5
Weight 500 g

WP6
Weight 330 g

Phase Control Thyristors–Capsule Types

Part Number	V_{DRM} V_{RRM}	I_{TAV}	I_{TSM}	I^2t	V_{T0}	r_T	T_{JM}	R_{thJC}		Fig. No.
		T_k = 55°C	10 ms ½ sine V_R - ≤60% V_{RRM}		@T_{JM}			d.c. 180° sine	120° Rect.	
	V	A	A	A^2S	V	mΩ	°C	K/W	K/W	
N1725MC360	3600	1725	20000	2.00×10^6	1.022	0.396	125	0.0150	0.0165	W70
N1802NC120	1200	1802	29600	4.38×10^6	0.855	0.171	125	0.0240	0.0271	W11
N1802NC160	1600	1802	29600	4.38×10^6	0.855	0.171	125	0.0240	0.0271	W11
N1806QK160	1600	1806	19100	1.82×10^6	1.022	0.253	125	0.0180	0.0217	WP2
N1806QK180	1800	1806	19100	1.82×10^6	1.022	0.253	125	0.0180	0.0217	WP2
N1817QL080	800	1760	22000	2.42×10^6	0.955	0.177	125	0.0230	0.0272	WP6
N1817QL120	1200	1760	22000	2.42×10^6	0.955	0.177	125	0.0230	0.0272	WP6
N1817QL140	1400	1760	22000	2.42×10^6	0.955	0.177	125	0.0230	0.0272	WP6
N2015ML200	2000	2015	32400	5.25×10^6	0.883	0.210	125	0.0180	0.0201	WP5
N2015ML220	2200	2015	32400	5.25×10^6	0.883	0.210	125	0.0180	0.0201	WP5
N2055MC260	2600	2105	25800	3.33×10^6	0.970	0.240	125	0.0150	0.0165	W70
N2055MC280	2800	2105	25800	3.33×10^6	0.970	0.240	125	0.0150	0.0165	W70
N2055HE420	4200	2055	24000	2.88×10^6	0.977	0.342	125	0.0125	0.0138	W80
N2055HE450	4500	2055	24000	2.88×10^6	0.977	0.342	125	0.0125	0.0138	W80
N2083QK080	800	2083	22000	2.42×10^6	0.955	0.177	125	0.0180	0.0217	WP2
N2083QK120	1200	2083	22000	2.42×10^6	0.955	0.177	125	0.0180	0.0217	WP2
N2083QK140	1400	2083	22000	2.42×10^6	0.955	0.177	125	0.0180	0.0217	WP2
N2086NC060	600	2086	35000	6.13×10^6	0.840	0.108	125	0.0240	0.0271	W11
N2086NC100	1000	2086	35000	6.13×10^6	0.840	0.108	125	0.0240	0.0271	W11
N2154JK020	200	2154	22700	2.58×10^6	0.890	0.107	140	0.0270	0.0314	WP1
N2154JK040	400	2154	22700	2.58×10^6	0.890	0.107	140	0.0270	0.0314	WP1
N2154JK060	600	2154	22700	2.58×10^6	0.890	0.107	140	0.0270	0.0314	WP1
N2172ZC420	4200	2172	28000	3.92×10^6	1.350	0.294	125	0.0110	0.0119	W13
N2172ZC450	4500	2172	28000	3.92×10^6	1.350	0.294	125	0.0110	0.0119	W13
N2172ZD420	4200	2172	28000	3.92×10^6	1.350	0.294	125	0.0110	0.0119	W46
N2172ZD450	4500	2172	28000	3.92×10^6	1.350	0.294	125	0.0110	0.0119	W46
N2191ML160	1600	2191	34500	5.95×10^6	0.940	0.154	125	0.0180	0.0201	WP5
N2191ML180	1800	2191	34500	5.95×10^6	0.940	0.154	125	0.0180	0.0201	WP5
N2367MK200	2000	2367	32400	5.25×10^6	0.883	0.210	125	0.0140	0.0157	WP3
N2367MK220	2200	2367	32400	5.25×10^6	0.883	0.210	125	0.0140	0.0157	WP3
N2418ZC300	3000	2418	30000	4.50×10^6	1.160	0.246	125	0.0110	0.0119	W13
N2418ZC360	3600	2418	30000	4.50×10^6	1.160	0.246	125	0.0110	0.0119	W13
N2418ZD300	3000	2418	30000	4.50×10^6	1.160	0.246	125	0.0110	0.0119	W46
N2418ZD360	3600	2418	30000	4.50×10^6	1.160	0.246	125	0.0110	0.0119	W46
N2500VC120	1200	2500	37000	6.85×10^6	0.880	0.124	125	0.0170	0.0206	W12
N2500VC160	1600	2500	37000	6.85×10^6	0.880	0.124	125	0.0170	0.0206	W12
N2500VF120	1200	2500	37000	6.85×10^6	0.880	0.124	125	0.0170	0.0206	W62

©2023 Littelfuse, Inc

Phase Control Thyristors–Capsule Types

Part Number	V_{DRM} V_{RRM}	I_{TAV}	I_{TSM}	I^2t	V_{T0}	r_T	T_{JM}	R_{thJC}		Fig. No.
		T_k = 55°C	10 ms ½ sine V_R - ≤60% V_{RRM}		@T_{JM}			d.c. 180° sine	120° Rect.	
	V	A	A	A^2S	V	mΩ	°C	K/W	K/W	
N2500VF160	1600	2500	37000	6.85×10^6	0.880	0.124	125	0.0170	0.0206	W62
N2520ML080	800	2520	38200	7.30×10^6	0.980	0.090	125	0.0180	0.0201	WP5
N2520ML120	1200	2520	38200	7.30×10^6	0.980	0.090	125	0.0180	0.0201	WP5
N2520ML140	1400	2520	38200	7.30×10^6	0.980	0.090	125	0.0180	0.0201	WP5
N2543ZC240	2400	2543	32000	5.12×10^6	0.780	0.274	125	0.0110	0.0119	W13
N2543ZC300	3000	2543	32000	5.12×10^6	0.780	0.274	125	0.0110	0.0119	W13
N2543ZD240	2400	2543	32000	5.12×10^6	0.780	0.274	125	0.0110	0.0119	W46
N2543ZD300	3000	2543	32000	5.12×10^6	0.780	0.274	125	0.0110	0.0119	W46
N2593MK160	1600	2593	34500	5.95×10^6	0.940	0.154	125	0.0140	0.0157	WP3
N2593MK180	1800	2593	34500	5.95×10^6	0.940	0.154	125	0.0140	0.0157	WP3
N2600MC160	1600	2600	30000	4.50×10^6	0.950	0.130	125	0.0150	0.0165	W70
N2600MC180	1800	2600	30000	4.50×10^6	0.950	0.130	125	0.0150	0.0165	W70
N2825TE420	4200	2825	36900	6.81×10^6	1.210	0.270	125	0.0080	0.0085	W82
N2825TE450	4500	2825	36900	6.81×10^6	1.210	0.270	125	0.0080	0.0085	W82
N2825TJ420	4200	2825	36900	6.81×10^6	1.210	0.270	125	0.0080	0.0085	W81
N2825TJ450	4500	2825	36900	6.81×10^6	1.210	0.270	125	0.0080	0.0085	W81
N2830HE260	2600	2830	36000	6.48×10^6	0.930	0.150	125	0.0125	0.0138	W80
N2830HE280	2800	2830	36000	6.48×10^6	0.930	0.150	125	0.0125	0.0138	W80
N2900QL020	200	2900	28000	3.92×10^6	0.850	0.080	150	0.0230	0.0272	WP6
N2900QL040	400	2900	28000	3.92×10^6	0.850	0.080	150	0.0230	0.0272	WP6
N2900QL060	600	2900	28000	3.92×10^6	0.850	0.080	150	0.0230	0.0272	WP6
N3012ZC200	2000	3012	45100	10.2×10^6	0.920	0.160	125	0.0110	0.0119	W13
N3012ZC260	2600	3012	45100	10.2×10^6	0.920	0.160	125	0.0110	0.0119	W13
N3012ZD200	2000	3012	45100	10.2×10^6	0.920	0.160	125	0.0110	0.0119	W46
N3012ZD260	2600	3012	45100	10.2×10^6	0.920	0.160	125	0.0110	0.0119	W46
N3022MK080	800	3022	38200	7.30×10^6	0.981	0.090	125	0.0140	0.0157	WP3
N3022MK120	1200	3022	38200	7.30×10^6	0.981	0.090	125	0.0140	0.0157	WP3
N3022MK140	1400	3022	38200	7.30×10^6	0.981	0.090	125	0.0140	0.0157	WP3
N3029ZC240	2400	3029	38200	7.30×10^6	0.947	0.154	125	0.0110	0.0119	W13
N3029ZC280	2800	3029	38200	7.30×10^6	0.947	0.154	125	0.0110	0.0119	W13
N3029ZD240	2400	3029	38200	7.30×10^6	0.947	0.154	125	0.0110	0.0119	W46
N3029ZD280	2800	3029	38200	7.30×10^6	0.947	0.154	125	0.0110	0.0119	W46
N3165HA260	2600	3165	36000	6.48×10^6	0.930	0.150	125	0.0105	0.0118	W79
N3165HA280	2800	3165	36000	6.48×10^6	0.930	0.150	125	0.0105	0.0118	W79
N3175HE160	1600	3175	45500	10.40×10^6	0.900	0.110	125	0.0125	0.0138	W80
N3175HE180	1800	3175	45500	10.40×10^6	0.900	0.110	125	0.0125	0.0138	W80
N3229QK020	200	3229	28000	3.92×10^6	0.926	0.067	140	0.0180	0.0217	WP2
N3229QK040	400	3229	28000	3.92×10^6	0.926	0.067	140	0.0180	0.0217	WP2
N3229QK060	600	3229	28000	3.92×10^6	0.926	0.067	140	0.0180	0.0217	WP2
N3533ZC140	1400	3533	50000	12.5×10^6	0.970	0.095	125	0.0110	0.0120	W13
N3533ZC180	1800	3533	50000	12.5×10^6	0.970	0.095	125	0.0110	0.0120	W13
N3533ZC220	2200	3533	50000	12.5×10^6	0.970	0.095	125	0.0110	0.0120	W13
N3533ZD140	1400	3533	50000	12.5×10^6	0.970	0.095	125	0.0110	0.0120	W46
N3533ZD180	1800	3533	50000	12.5×10^6	0.970	0.095	125	0.0110	0.0120	W46
N3533ZD220	2200	3533	50000	12.5×10^6	0.970	0.095	125	0.0110	0.0120	W46
N3565HA160	1600	3565	45500	10.4×10^6	0.900	0.110	125	0.0105	0.0118	W79
N3565HA180	1800	3565	45500	10.4×10^6	0.900	0.110	125	0.0105	0.0118	W79
N3597ML020	200	3597	45400	10.3×10^6	0.840	0.053	140	0.0180	0.0201	WP5
N3597ML040	400	3597	45400	10.3×10^6	0.840	0.053	140	0.0180	0.0201	WP5
N3597ML060	600	3597	45400	10.3×10^6	0.840	0.053	140	0.0180	0.0201	WP5
N3620TE320	3200	3620	52500	11.2×10^6	0.911	0.168	125	0.0080	0.0085	W82
N3620TE360	3600	3620	52500	11.2×10^6	0.911	0.168	125	0.0080	0.0085	W82
N3620TJ320	3200	3620	52500	11.2×10^6	0.911	0.168	125	0.0080	0.0085	W81
N3620TJ360	3600	3620	52500	11.2×10^6	0.911	0.168	125	0.0080	0.0085	W81
N3790TE240	2400	3790	49500	12.3×10^6	0.900	0.150	125	0.0080	0.0085	W82
N3790TE280	2800	3790	49500	12.3×10^6	0.900	0.150	125	0.0080	0.0085	W82

W8
Weight 70 g

W46
Weight 1.2 kg

W107
Weight 1.6 kg

WP3
Weight 260 g

W10
Weight 340 g

W58
Weight 90 g

W108
Weight 2.1 kg

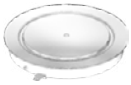
WP4
Weight 550 g

W11
Weight 510 g

W81
Weight 1.2 kg

W118
Weight 2.2 kg

W13
Weight 1.7 kg

W82
Weight 1.65 kg

W119
Weight 2.9 kg

Phase Control Thyristors–Capsule Types

Part Number	V_{DRM} V_{RRM}	I_{TAV}	I_{TSM}	I^2t	V_{T0}	r_T	T_{JM}	R_{thJC}		Fig. No.
		T_k = 55°C	10 ms ½ sine V_R - ≤60% V_{RRM}		@T_{JM}			d.c. 180° sine	120° Rect.	
	V	A	A	A^2S	V	mΩ	°C	K/W	K/W	
N3790TJ240	2400	3790	49500	12.3×10^6	0.900	0.150	125	0.0080	0.0085	W81
N3790TJ280	2800	3790	49500	12.3×10^6	0.900	0.150	125	0.0080	0.0085	W81
N3880ZD160	1600	3880	59000	17.4×10^6	0.986	0.068	125	0.0110	0.0119	W46
N3880ZD180	1800	3880	59000	17.4×10^6	0.986	0.068	125	0.0110	0.0119	W46
N3904HK200	2000	3904	50900	12.95×10^6	0.920	0.111	125	0.0090	0.0099	WP4
N3904HK220	2200	3904	50900	12.95×10^6	0.920	0.111	125	0.0090	0.0099	WP4
N3930ZC120	1200	3930	54000	14.6×10^6	0.841	0.080	125	0.0110	0.0119	W13
N3930ZC160	1600	3930	54000	14.6×10^6	0.841	0.080	125	0.0110	0.0119	W13
N3930ZD120	1200	3930	54000	14.6×10^6	0.841	0.080	125	0.0110	0.0119	W46
N3930ZD160	1600	3930	54000	14.6×10^6	0.841	0.080	125	0.0110	0.0119	W46
N4085ZC080	800	4085	64000	20.5×10^6	0.850	0.070	125	0.0110	0.0119	W13
N4085ZC120	1200	4085	64000	20.5×10^6	0.850	0.070	125	0.0110	0.0119	W13
N4085ZD080	800	4085	64000	20.5×10^6	0.850	0.070	125	0.0110	0.0119	W46
N4085ZD120	1200	4085	64000	20.5×10^6	0.850	0.070	125	0.0110	0.0119	W46
N4165EE420	4200	4165	56000	15.7×10^6	0.977	0.177	125	0.0060	0.0064	W108
N4165EE450	4500	4165	56000	15.7×10^6	0.977	0.177	125	0.0060	0.0064	W108
N4240EA480	4800	4240	43200	9.33×10^6	1.039	0.216	125	0.0050	0.0054	W107
N4240EA520	5200	4240	43200	9.33×10^6	1.039	0.216	125	0.0050	0.0054	W107
N4316MK020	200	4316	45400	10.3×10^6	0.840	0.053	140	0.0140	0.0157	WP3
N4316MK040	400	4316	45400	10.3×10^6	0.840	0.053	140	0.0140	0.0157	WP3
N4316MK060	600	4316	45400	10.3×10^6	0.840	0.053	140	0.0140	0.0157	WP3
N4340TE180	1800	4340	55000	15.1×10^6	0.886	0.105	125	0.0080	0.0085	W82
N4340TE220	2200	4340	55000	15.1×10^6	0.886	0.105	125	0.0080	0.0085	W82
N4340TJ180	1800	4340	55000	15.1×10^6	0.886	0.105	125	0.0080	0.0085	W81
N4340TJ220	2200	4340	55000	15.1×10^6	0.886	0.105	125	0.0080	0.0085	W81
N4472HK160	1600	4472	59000	17.40×10^6	0.986	0.068	125	0.0090	0.0099	WP4
N4472HK180	1800	4472	59000	17.40×10^6	0.986	0.068	125	0.0090	0.0099	WP4
N4650EA420	4200	4650	56000	15.7×10^6	0.977	0.177	125	0.0050	0.0054	W107
N4650EA450	4500	4650	56000	15.7×10^6	0.977	0.177	125	0.0050	0.0054	W107
N4845EE320	3200	4845	65000	21.1×10^6	0.913	0.125	125	0.0060	0.0065	W108
N4845EE360	3600	4845	65000	21.1×10^6	0.913	0.125	125	0.0060	0.0065	W108
N4940HK120	1200	4940	62000	19.0×10^6	0.939	0.520	125	0.0090	0.0099	WP4
N4940HK140	1400	4940	62000	19.0×10^6	0.939	0.520	125	0.0090	0.0099	WP4
N5320FE420	4200	5320	78000	30.42×10^6	1.060	0.130	125	0.0048	0.0051	W119
N5320FE450	4500	5320	78000	30.42×10^6	1.060	0.130	125	0.0048	0.0051	W119
N5715EE240	2400	5715	80000	32.0×10^6	0.840	0.085	125	0.0060	0.0065	W108
N5715EE280	2800	5715	80000	32.0×10^6	0.840	0.085	125	0.0060	0.0065	W108
N5910FA420	4200	5910	78000	30.42×10^6	1.060	0.130	125	0.0040	0.0044	W118
N5910FA450	4500	5910	78000	30.42×10^6	1.060	0.130	125	0.0040	0.0044	W118
N6012ZD020	200	6012	65000	21.13×10^6	0.853	0.029	140	0.0110	0.0119	W46

©2023 Littelfuse, Inc

Phase Control Thyristors–Capsule Types

Part Number	V_{DRM} V_{RRM}	I_{TAV}	I_{TSM}	I^2t	V_{T0}	r_T	T_{JM}	R_{thJC}		Fig. No.
		T_k = 55°C	10 ms ½ sine V_R - ≤60% V_{RRM}		@T_{JM}			d.c. 180° sine	120° Rect.	
	V	A	A	A²S	V	mΩ	°C	K/W	K/W	
N6012ZD040	400	6012	65000	21.13×10^6	0.853	0.029	140	0.0110	0.0119	W46
N6012ZD060	600	6012	65000	21.13×10^6	0.853	0.029	140	0.0110	0.0119	W46
N6405EA240	2400	6405	80000	32.0×10^6	0.840	0.085	125	0.0050	0.0054	W107
N6405EA280	2800	6405	80000	32.0×10^6	0.840	0.085	125	0.0050	0.0054	W107
N6974HK020	200	6974	65000	21.13×10^6	0.853	0.029	140	0.0090	0.0099	WP4
N6974HK040	400	6974	65000	21.13×10^6	0.853	0.029	140	0.0090	0.0099	WP4
N6974HK060	600	6974	65000	21.13×10^6	0.853	0.029	140	0.0090	0.0099	WP4
N7585FE240	2400	7535	110000	60.50×10^6	0.780	0.062	125	0.0048	0.0051	W119
N7585FE280	2800	7535	110000	60.50×10^6	0.780	0.062	125	0.0048	0.0051	W119
N7905FE180	1800	7905	117000	68.44×10^6	0.770	0.056	125	0.0048	0.0051	W119
N7905FE220	2200	7905	117000	68.44×10^6	0.770	0.056	125	0.0048	0.0051	W119
N8440FA240	2400	8440	110000	60.50×10^6	0.780	0.062	125	0.0040	0.0044	W118
N8440FA280	2800	8440	110000	60.50×10^6	0.780	0.062	125	0.0040	0.0044	W118
N8800FA180	1800	8800	117000	68.44×10^6	0.770	0.056	125	0.0040	0.0044	W118
N8800FA220	2200	8800	117000	68.44×10^6	0.770	0.056	125	0.0040	0.0044	W118

Phase Control Thyristors–Capsule Types, B-Series

IXYS UK Littelfuse presents the new family of phase control thyristors for industrial application. Devices with voltage ranges from 1200V to 2500V are available, making them suitable for applications with line voltages from 230V to over 600V.

Part Number	V_{DRM} V_{RRM}	I_{TAV}	I_{TSM}	I^2t	V_{T0}	r_T	T_{JM}	R_{thJC}		Fig. No.
		T_k = 55°C	10 ms ½ sine V_R - ≤60% V_{RRM}		@T_{JM}			180° sine	120° Rect.	
	V	A	A	A²S	V	mΩ	°C	K/W	K/W	
B0470WC120	1200	470	4650	108×10^3	0.92	0.99	125	0.0722	0.0891	W8
B0470WC160	1600	470	4650	108×10^3	0.92	0.99	125	0.0722	0.0891	W8
B0713YC200	2000	713	7100	252×10^3	1.103	0.804	125	0.039	0.046	W58
B0713YC220	2200	713	7100	252×10^3	1.103	0.804	125	0.039	0.046	W58
B0713YC240	2400	713	7100	252×10^3	1.103	0.804	125	0.039	0.046	W58
B0713YC250	2500	713	7100	252×10^3	1.103	0.804	125	0.039	0.046	W58
B0800YC120	1200	800	7500	281×10^3	1.08	0.596	125	0.0389	0.046	W58
B0800YC140	1400	800	7500	281×10^3	1.08	0.596	125	0.0389	0.046	W58
B0800YC160	1600	800	7500	281×10^3	1.08	0.596	125	0.0389	0.046	W58
B0800YC180	1800	800	7500	281×10^3	1.08	0.596	125	0.0389	0.046	W58
B0870YC120	1200	870	8400	353×10^3	1.03	0.48	125	0.0389	0.0461	W58
B0870YC140	1400	870	8400	353×10^3	1.03	0.48	125	0.0389	0.0461	W58
B0870YC160	1600	870	8400	353×10^3	1.03	0.48	125	0.0389	0.0461	W58
B1115LC160	1600	1157	12700	806×10^3	0.973	0.369	125	0.032	0.0388	W10
B1115LC180	1800	1157	12700	806×10^3	0.973	0.369	125	0.032	0.0388	W10
B1230LC120	1200	1226	15000	1.125×10^6	0.883	0.297	125	0.032	0.0388	W10
B1230LC140	1400	1226	15000	1.125×10^6	0.883	0.297	125	0.032	0.0388	W10
B1230LC160	1600	1226	15000	1.125×10^6	0.883	0.297	125	0.032	0.0388	W10
B1725NC120	1200	1725	27200	3.70×10^6	0.972	0.169	125	0.0248	0.0271	W11
B1725NC140	1400	1725	27200	3.70×10^6	0.972	0.169	125	0.0248	0.0271	W11
B1725NC160	1600	1725	27200	3.70×10^6	0.972	0.169	125	0.0248	0.0271	W11
B1725NC180	1800	1725	27200	3.70×10^6	0.972	0.169	125	0.0248	0.0271	W11
B1815NC120	1200	1815	29600	4.38×10^6	0.847	0.17	125	0.0248	0.0271	W11
B1815NC140	1400	1815	29600	4.38×10^6	0.847	0.17	125	0.0248	0.0271	W11
B1815NC160	1600	1815	29600	4.38×10^6	0.847	0.17	125	0.0248	0.0271	W11

Medium Voltage Thyristors

Medium voltage applications place additional demands on phase-controlled thyristors. To meet these demands, we have developed a comprehensive range of thyristors optimized for medium voltage applications and series operation. As voltages increase, so do switching losses and turn-off time, to a point where they become significant in line-frequency applications. Our patented distributed gate architecture ensures excellent switching performance over a wide range of voltage, current, and di/dt. Device lifetime is also engineered to achieve an optimum balance between conduction losses, commutation losses, and turn-off time to give maximum power handling from line frequency to 400 Hz. This also gives significant benefits when series or parallel connection of devices is required. Medium voltage thyristors are available from 2.8 kV up to 6.5 kV with silicon diameters from 38 mm to 96 mm making them particularly suitable for high-power converters such as medium voltage DC drives, medium voltage soft starts, and utility applications such as HVDC, static VAr compensators, excitation, and transfer switches.

We recognize the importance of reliability in these large, capital intensive applications and, as a result, we subject these parts to extended levels of both routine and type testing to ensure that investments provide years of trouble-free service.

W10
Weight 340 g

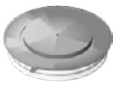

W62
Weight 1 kg

W82
Weight 1.65 kg

W11
Weight 510 g

W79
Weight 890 g

W107
Weight 1.6 kg

W13
Weight 1.7 kg

W80
Weight 1.2 kg

W46
Weight 1.2 kg

W81
Weight 1.2 kg

Medium Voltage Thyristors—Capsule Types

Part Number	V_{DRM} V_{RRM}	I_{TAV}	I_{TSM}	I^2t	t_q @ 200 V/µs	Typ. Reverse Recovery Charge			V_{TO}	r_T	T_{JM}	R_{thJK}		Fig. No.
		T_K = 55°C	10 ms ½ sine V_R - ≤60% V_{RRM}			T_{JM}			@ T_{JM}			180° sine	120° Rect.	
						Q_{rr}	@I_{TM}	@-di/dt						
	V	A	A	A^2S	µs	µC	A	A/µs	V	mΩ	°C	K/W	K/W	
K0443LC600	6000	443	4800	115 ×10³	1100	3100	1000	10	1.57	2.43	125	0.032	0.039	W10
K0443LC650	6500	443	4800	115×10³	1100	3100	1000	10	1.57	2.43	125	0.032	0.039	W10
K0769NC600	6000	769	8600	370×10³	1200	3100	1000	10	1.57	1.77	125	0.025	0.027	W11
K0769NC650	6500	769	8600	370×10³	1200	3100	1000	10	1.57	1.77	125	0.025	0.027	W11
K0890NC360	3600	890	10900	594 × 10³	350-550	4000	1000	10	1.516	0.800	125	0.0240	0.0270	W11
K0890NC420	4200	890	10900	594 × 10³	350-550	4000	1000	10	1.516	0.800	125	0.0240	0.0270	W11
K1121NC320	3200	1121	15000	1.13 × 10⁶	200-300	2000	1000	10	1.098	0.542	125	0.0240	0.0270	W11
K1121NC360	3600	1121	15000	1.13 × 10⁶	200-300	2000	1000	10	1.098	0.542	125	0.0240	0.0270	W11
K1197NC280	2800	1197	10650	567 × 10³	200-300	2700	1000	10	1.335	0.372	125	0.0240	0.0270	W11
K1197NC320	3200	1197	10650	567 × 10³	200-300	2700	1000	10	1.335	0.372	125	0.0240	0.0270	W11
K1351VF600	6000	1351	14300	1.02 ×10⁶	1000	7200	2000	10	1.41	0.6	125	0.013	0.0145	W62
K1351VF620	6200	1351	14300	1.02 ×10⁶	1000	7200	2000	10	1.41	0.6	125	0.013	0.0145	W63
K1351VF640	6400	1351	14300	1.02 ×10⁶	1000	7200	2000	10	1.41	0.6	125	0.013	0.0145	W64
K1351VF650	6500	1351	14300	1.02 ×10⁶	1000	7200	2000	10	1.41	0.6	125	0.013	0.0145	W65
K1947ZC400	4000	1947	25000	3.13 × 10⁶	600-700	8800	1000	10	1.221	0.425	125	0.0110	0.0119	W13

©2023 Littelfuse, Inc

Medium Voltage Thyristors–Capsule Types

Part Number	V_{DRM} V_{RRM}	I_{TAV}	I_{TSM}	I^2t	t_q @ 200 V/µs	Typ. Reverse Recovery Charge			V_{TO}	r_T	T_{JM}	R_{thJK}		Fig. No.
		T_K = 55°C	10 ms ½ sine V_R - ≤60% V_{RRM}			T_{JM}			@ T_{JM}			180° sine	120° Rect.	
						Q_{rr}	@I_{TM}	@-di/dt						
	V	A	A	A^2S	µs	µC	A	A/µs	V	mΩ	°C	K/W	K/W	
K1947ZC450	4500	1947	25000	3.13×10^6	600-700	8800	1000	10	1.221	0.425	125	0.0110	0.0119	W13
K1947ZD400	4000	1947	25000	3.13×10^6	600-700	8800	1000	10	1.221	0.425	125	0.0110	0.0119	W46
K1947ZD450	4500	1947	25000	3.13×10^6	600-700	8800	1000	10	1.221	0.425	125	0.0110	0.0119	W46
K2085TE600	6000	2145	33000	5.45×10^6	1450-1800	11000	3000	10	1.260	0.410	125	0.0095	0.0101	W82
K2085TE650	6500	2145	33000	5.45×10^6	1450-1800	11000	3000	10	1.260	0.410	125	0.0095	0.0101	W82
K2095ZC360	3600	2095	18200	1.66×10^6	400-500	4550	2000	10	1.502	0.296	125	0.0110	0.0119	W13
K2095ZC420	4200	2095	18200	1.66×10^6	400-500	4550	2000	10	1.502	0.296	125	0.0110	0.0119	W13
K2095ZD360	3600	2095	18200	1.66×10^6	400-500	4550	2000	10	1.502	0.296	125	0.0110	0.0119	W46
K2095ZD420	4200	2095	18200	1.66×10^6	400-500	4550	2000	10	1.502	0.296	125	0.0110	0.0119	W46
K2325TJ600	6000	2380	33000	5.45×10^6	1450-1800	11000	3000	10	1.260	0.410	125	0.0080	0.0085	W81
K2325TJ650	6500	2380	33000	5.45×10^6	1450-1800	11000	3000	10	1.260	0.410	125	0.0080	0.0085	W81
K3745EA600	6000	3745	35400	6.26×10^6	1500-1800	14000	4000	10	1.320	0.270	125	0.0050	0.0054	W107
K3745EA650	6500	3745	35400	6.26×10^6	1500-1800	14000	4000	10	1.320	0.270	125	0.0050	0.0054	W107
K4005EA480	4800	4005	43200	9.33×10^6	1300-1600	8000	4000	10	1.359	0.216	125	0.0050	0.0054	W107
K4005EA520	5200	4005	43200	9.33×10^6	1300-1600	8000	4000	10	1.359	0.216	125	0.0050	0.0054	W107
K4215EA420	4200	4215	47000	11.0×10^6	1200-1500	4800	4000	10	1.224	0.201	125	0.0050	0.0054	W107
K4215EA450	4500	4215	47000	11.0×10^6	1200-1500	4800	4000	10	1.224	0.201	125	0.0050	0.0054	W107

Fast Turn-Off Thyristors

IXYS UK Westcode Ltd's "P" series of fast switching thyristors have a regenerative gate structure to ensure low switching losses and high di/dt performance. "P" series devices are suitable for existing inverters, DC chopper drives, UPS, and Pulse Power applications. In addition to pressure contact technology, these devices offer low reverse recovery charge values, low forward switching losses, and high reliability. These devices are not recommended for new designs.

W8
Weight 70 g

W16
Weight 100 g

W17
Weight 130 g

W10
Weight 340 g

W115
Weight 650 g

W18
Weight 280 g

W58
Weight 90 g

Fast Turn-Off Thyristors – Stud Types

Part Number	V_{DRM} V_{RRM}	I_{TAV}	I_{TSM}	I^2t	t_q @ 200 V/µs	Typ. Reverse Recovery Charge			V_{TO}	r_T	R_{thJC} 180° sine	Fig. No.
		T_C = 55°C	10 ms ½ sine V_R - ≤60% V_{RRM}			T_{JM}			@ T_{JM}			
						Q_{rr}	@I_{TM}	@-di/dt				
	V	A	A	A^2S	µs	µC	A	A/µs	V	mΩ	K/W	
P0128SH10C	1000	128	1700	19 × 10³	15	50	100	10	1.600	2.490	0.2300	W17
P0128SH10D	1000	128	1700	19 × 10³	20	50	100	10	1.600	2.490	0.2300	W17
P0128SH10E	1000	128	1700	19 × 10³	25	50	100	10	1.600	2.490	0.2300	W17
P0128SH12C	1200	128	1700	19 × 10³	15	50	100	10	1.600	2.490	0.2300	W17
P0128SH12D	1200	128	1700	19 × 10³	20	50	100	10	1.600	2.490	0.2300	W17
P0128SH12E	1200	128	1700	19 × 10³	25	50	100	10	1.600	2.490	0.2300	W17
P0128SJ10C	1000	128	1700	19 × 10³	15	50	100	10	1.600	2.490	0.2300	W16
P0128SJ10D	1000	128	1700	19 × 10³	20	50	100	10	1.600	2.490	0.2300	W16
P0128SJ10E	1000	128	1700	19 × 10³	25	50	100	10	1.600	2.490	0.2300	W16
P0128SJ12C	1200	128	1700	19 × 10³	15	50	100	10	1.600	2.490	0.2300	W16
P0128SJ12D	1200	128	1700	19 × 10³	20	50	100	10	1.600	2.490	0.2300	W16
P0128SJ12E	1200	128	1700	19 × 10³	25	50	100	10	1.600	2.490	0.2300	W16
R0472YC12EKER	1200	240	4000	80 × 10³	25	155	550	40	1.648	1.125	0.1249	W115
R0472YC12FKER	1200	240	4000	80 × 10³	30	155	550	40	1.648	1.125	0.1249	W115
R0472YC16EKER	1600	240	4000	80 × 10³	25	155	550	40	1.648	1.125	0.1249	W115
R0472YC16FKER	1600	240	4000	80 × 10³	30	155	550	40	1.648	1.125	0.1249	W115
P0248SC12D	1200	248	2700	36.5 × 10³	20	45	300	20	1.600	1.230	0.1200	W18
P0248SC12E	1200	248	2700	36.5 × 10³	25	45	300	20	1.600	1.230	0.1200	W18
P0273SC12D	1200	273	3250	52.8 × 10³	20	80	300	20	1.550	0.870	0.1200	W18
P0273SC12E	1200	273	3250	52.8 × 10³	25	80	300	20	1.550	0.870	0.1200	W18
P0273SC12F	1200	273	3250	52.8 × 10³	30	80	300	20	1.550	0.870	0.1200	W18
P0306SC08A	800	306	4700	110 × 10³	10	50	300	20	1.400	0.670	0.1200	W18
P0306SC08B	800	306	4700	110 × 10³	12	50	300	20	1.400	0.670	0.1200	W18
P0306SC08C	800	306	4700	110 × 10³	15	50	300	20	1.400	0.670	0.1200	W18
P0311SC12E	1200	311	3600	64.8 × 10³	25	55	300	20	1.170	0.920	0.1200	W18
P0311SC12F	1200	311	3600	64.8 × 10³	30	55	300	20	1.170	0.920	0.1200	W18
P0330SC04A	400	330	5000	125 × 10³	10	55	300	20	1.050	0.880	0.1200	W18
P0330SC04C	400	330	5000	125 × 10³	15	55	300	20	1.050	0.880	0.1200	W18
P0330SC06A	600	330	5000	125 × 10³	10	55	300	20	1.050	0.880	0.1200	W18
P0330SC06C	600	330	5000	125 × 10³	15	55	300	20	1.050	0.880	0.1200	W18
P0330SC08A	800	330	5000	125 × 10³	10	55	300	20	1.050	0.880	0.1200	W18
P0330SC08C	800	330	5000	125 × 10³	15	55	300	20	1.050	0.880	0.1200	W18
P0431SC04B	400	431	6500	211 × 10³	12	190	300	20	0.950	0.377	0.1200	W18
P0431SC04C	400	431	6500	211 × 10³	15	190	300	20	0.950	0.377	0.1200	W18
P0431SC06B	600	431	6500	211 × 10³	12	190	300	20	0.950	0.377	0.1200	W18
P0431SC06C	600	431	6500	211 × 10³	15	190	300	20	0.950	0.377	0.1200	W18

©2023 Littelfuse, Inc

Fast Turn-Off Thyristors—Stud Types

Part Number	V_{DRM} V_{RRM}	I_{TAV}	I_{TSM}	I^2t	t_q @ 200 V/µs	Typ. Reverse Recovery Charge			V_{TO}	r_T	R_{thJC} 180° sine	Fig. No.
		T_C = 55°C	10 ms ½ sine V_R - ≤60% V_{RRM}			T_{JM}			@ T_{JM}			
						Q_{rr}	@I_{TM}	@-di/dt				
	V	A	A	A^2S	µs	µC	A	A/µs	V	mΩ	K/W	
P0295WC12D	1200	295	2700	36.5 × 10³	20	50	300	20	1.600	1.230	0.0950	W8
P0295WC12E	1200	295	2700	36.5 × 10³	25	50	300	20	1.600	1.230	0.0950	W8
P0327WC08C	800	327	3250	63.9 × 10³	15	45	300	20	1.550	0.870	0.0950	W8
P0327WC08D	800	327	3250	63.9 × 10³	20	45	300	20	1.550	0.870	0.0950	W8
P0327WC08E	800	327	3250	63.9 × 10³	25	45	300	20	1.550	0.870	0.0950	W8
P0327WC08F	800	327	3250	63.9 × 10³	30	45	300	20	1.550	0.870	0.0950	W8
P0327WC12C	1200	327	3250	63.9 × 10³	15	45	300	20	1.550	0.870	0.0950	W8
P0327WC12D	1200	327	3250	63.9 × 10³	20	45	300	20	1.550	0.870	0.0950	W8
P0327WC12E	1200	327	3250	63.9 × 10³	25	45	300	20	1.550	0.870	0.0950	W8
P0327WC12F	1200	327	3250	63.9 × 10³	30	45	300	20	1.550	0.870	0.0950	W8
P0366WC04A	400	366	4700	110 × 10³	10	25	300	20	1.400	0.670	0.0950	W8
P0366WC04B	400	366	4700	110 × 10³	12	25	300	20	1.400	0.670	0.0950	W8
P0366WC04C	400	366	4700	110 × 10³	15	25	300	20	1.400	0.670	0.0950	W8
P0366WC06A	600	366	4700	110 × 10³	10	25	300	20	1.400	0.670	0.0950	W8
P0366WC06B	600	366	4700	110 × 10³	12	25	300	20	1.400	0.670	0.0950	W8
P0366WC06C	600	366	4700	110 × 10³	15	25	300	20	1.400	0.670	0.0950	W8
P0366WC08A	800	366	4700	110 × 10³	10	25	300	20	1.400	0.670	0.0950	W8
P0366WC08B	800	366	4700	110 × 10³	12	25	300	20	1.400	0.670	0.0950	W8
P0366WC08C	800	366	4700	110 × 10³	15	25	300	20	1.400	0.670	0.0950	W8
P0367WC12E	1200	367	3600	64.8 × 10³	25	50	300	20	1.170	0.920	0.0950	W8
P0367WC12F	1200	367	3600	64.8 × 10³	30	50	300	20	1.170	0.920	0.0950	W8
P0389WC04B	400	389	5000	125 × 10³	12	30	300	20	1.050	0.880	0.0950	W8
P0389WC04C	400	389	5000	125 × 10³	15	30	300	20	1.050	0.880	0.0950	W8
P0389WC08B	800	389	5000	125 × 10³	12	30	300	20	1.050	0.880	0.0950	W8
P0389WC08C	800	389	5000	125 × 10³	15	30	300	20	1.050	0.880	0.0950	W8
P0515WC04B	400	515	6500	211 × 10³	12	180	300	20	0.950	0.377	0.0950	W8
P0515WC04C	400	515	6500	211 × 10³	15	180	300	20	0.950	0.377	0.0950	W8
P0515WC04D	400	515	6500	211 × 10³	20	180	300	20	0.950	0.377	0.0950	W8
P0515WC06B	600	515	6500	211 × 10³	12	180	300	20	0.950	0.377	0.0950	W8
P0515WC06C	600	515	6500	211 × 10³	15	180	300	20	0.950	0.377	0.0950	W8
P0515WC06D	600	515	6500	211 × 10³	20	180	300	20	0.950	0.377	0.0950	W8
P0838LC06B	600	1110	12300	750 × 10³	12	160	800	50	1.200	0.280	0.0320	W10
P0838LC06C	600	1110	12300	750 × 10³	15	160	800	50	1.200	0.280	0.0320	W10
P0838LC08B	800	1110	12300	750 × 10³	12	160	800	50	1.200	0.280	0.0320	W10
P0838LC08C	800	1110	12300	750 × 10³	15	160	800	50	1.200	0.280	0.0320	W10
P0848YC04B	400	848	8750	383 × 10³	12	200	550	40	1.010	0.305	0.0500	W58
P0848YC04C	400	848	8750	383 × 10³	15	200	550	40	1.010	0.305	0.0500	W58
P0848YC06B	600	848	8750	383 × 10³	12	200	550	40	1.010	0.305	0.0500	W58
P0848YC06C	600	848	8750	383 × 10³	15	200	550	40	1.010	0.305	0.0500	W58
P1007LC08D	800	1007	9500	451 × 10³	20	400	800	50	1.509	0.265	0.0320	W10
P1007LC08E	800	1007	9500	451 × 10³	25	400	800	50	1.509	0.265	0.0320	W10
P1007LC08F	800	1007	9500	451 × 10³	30	400	800	50	1.509	0.265	0.0320	W10
P1007LC12D	1200	1007	9500	451 × 10³	20	400	800	50	1.509	0.265	0.0320	W10
P1007LC12E	1200	1007	9500	451 × 10³	25	400	800	50	1.509	0.265	0.0320	W10
P1007LC12F	1200	1007	9500	451 × 10³	30	400	800	50	1.509	0.265	0.0320	W10

Distributed Gate Thyristors

IXYS UK Westcode Ltd. is recognized as the world leader in distributed gate technology. These devices are available with blocking voltages of up to 4.5 kV and average currents in excess of 5 kA, with tq ratings from 10 µs. This unique distributed gate design and these lifetime control features give these devices both high di/dt capability and fast, low-recovery turn-off while maintaining a low on-state voltage drop. They are ideally suited to applications such as: induction power supplies, high frequency inverters/converters, UPS, and pulse power.

W10
Weight 340 g

W11
Weight 510 g

W58
Weight 90 g

Distributed Gate Thyristors—Capsule Types

Part Number	V_{DRM}	V_{RRM}	I_{TAV}	I_{TSM}	I^2t	t_q @ 200 V/µs	Typ. Reverse Recovery Charge @ T_{JM}			V_{TO}	r_T	R_{thJK} 180° sine	Fig. No.
			T_K = 55°C	10 ms ½ sine V_R - ≤60% V_{RRM}			Q_{rr}	@I_{TM}	@-di/dt	@ T_{JM}			
	V	V	A	A	A^2S	µs	µC	A	A/µs	V	mΩ	K/W	
R0472YC12E	1200	1200	472	4300	92.5 × 10³	25	155	550	40	1.648	1.125	0.0500	W58
R0472YC12F	1200	1200	472	4300	92.5 × 10³	30	155	550	40	1.648	1.125	0.0500	W58
R0472YC16E	1600	1600	472	4300	92.5 × 10³	25	155	550	40	1.648	1.125	0.0500	W58
R0472YC16F	1600	1600	472	4300	92.5 × 10³	30	155	550	40	1.648	1.125	0.0500	W58
R0487YC12D	1200	1200	487	4300	92.5 × 10³	20	90	550	40	1.738	0.943	0.0500	W58
R0487YC12E	1200	1200	487	4300	92.5 × 10³	25	90	550	40	1.738	0.943	0.0500	W58
R0487YC14D	1400	1400	487	4300	92.5 × 10³	20	90	550	40	1.738	0.943	0.0500	W58
R0487YC14E	1400	1400	487	4300	92.5 × 10³	25	90	550	40	1.738	0.943	0.0500	W58
R0577YC12C	1200	1200	577	6000	180 × 10³	15	150	550	40	1.510	0.640	0.0500	W58
R0577YC12D	1200	1200	577	6000	180 × 10³	20	150	550	40	1.510	0.640	0.0500	W58
R0577YC12E	1200	1200	577	6000	180 × 10³	25	150	550	40	1.510	0.640	0.0500	W58
R0633YC12D	1200	1200	633	6300	200 × 10³	20	125	550	40	1.250	0.614	0.0500	W58
R0633YC12E	1200	1200	633	6300	200 × 10³	25	125	550	40	1.250	0.614	0.0500	W58
R0633YC12F	1200	1200	633	6300	200 × 10³	30	125	550	40	1.250	0.614	0.0500	W58
R0717LC14G	1400	1400	717	7050	248.5 × 10³	35	425	1000	60	1.752	0.732	0.0320	W10
R0717LC14H	1400	1400	717	7050	248.5 × 10³	40	425	1000	60	1.752	0.732	0.0320	W10
R0717LC16G	1600	1600	717	7050	248.5 × 10³	35	425	1000	60	1.752	0.732	0.0320	W10
R0717LC16H	1600	1600	717	7050	248.5 × 10³	40	425	1000	60	1.752	0.732	0.0320	W10
R0736LC20J	2000	2000	736	6800	231 × 10³	50	640	1000	60	1.842	0.619	0.0320	W10
R0736LC20K	2000	2000	736	6800	231 × 10³	60	640	1000	60	1.842	0.619	0.0320	W10
R0736LC22J	2200	2000	736	6800	231 × 10³	50	640	1000	60	1.842	0.619	0.0320	W10
R0736LC22K	2200	2000	736	6800	231 × 10³	60	640	1000	60	1.842	0.619	0.0320	W10
R0736LC25J	2500	2000	736	6800	231 × 10³	50	640	1000	60	1.842	0.619	0.0320	W10
R0736LC25K	2500	2000	736	6800	231 × 10³	60	640	1000	60	1.842	0.619	0.0320	W10
R0736LC25L	2500	2000	736	6800	231 × 10³	65	640	1000	60	1.842	0.619	0.0320	W10
R0736LC25M	2500	2000	736	6800	231 × 10³	70	640	1000	60	1.842	0.619	0.0320	W10
R0809LC10A	1000	1000	809	8000	320 × 10³	10	120	1000	60	2.100	0.300	0.0320	W10
R0809LC10B	1000	1000	809	8000	320 × 10³	12	120	1000	60	2.100	0.300	0.0320	W10
R0830LC12C	1200	1200	830	8500	361 × 10³	15	285	1000	60	1.900	0.357	0.0320	W10
R0830LC12D	1200	1200	830	8500	361 × 10³	20	285	1000	60	1.900	0.357	0.0320	W10
R0830LC12E	1200	1200	830	8500	361 × 10³	25	285	1000	60	1.900	0.357	0.0320	W10
R0830LC12F	1200	1200	830	8500	361 × 10³	30	285	1000	60	1.900	0.357	0.0320	W10
R0830LC14C	1400	1400	830	8500	361 × 10³	15	285	1000	60	1.900	0.357	0.0320	W10
R0830LC14D	1400	1400	830	8500	361 × 10³	20	285	1000	60	1.900	0.357	0.0320	W10
R0830LC14E	1400	1400	830	8500	361 × 10³	25	285	1000	60	1.900	0.357	0.0320	W10
R0830LC14F	1400	1400	830	8500	361 × 10³	30	285	1000	60	1.900	0.357	0.0320	W10
R0878LC18K	1800	1800	878	7500	281 × 10³	60	720	1000	60	1.447	0.480	0.0320	W10
R0878LC18L	1800	1800	878	7500	281 × 10³	65	720	1000	60	1.447	0.480	0.0320	W10
R0878LC18M	1800	1800	878	7500	281 × 10³	70	720	1000	60	1.447	0.480	0.0320	W10
R0878LC20K	2000	1800	878	7500	281 × 10³	60	720	1000	60	1.447	0.480	0.0320	W10
R0878LC20L	2000	1800	878	7500	281 × 10³	65	720	1000	60	1.447	0.480	0.0320	W10
R0878LC20M	2000	1800	878	7500	281 × 10³	70	720	1000	60	1.447	0.480	0.0320	W10
R0878LC21K	2100	1800	878	7500	281 × 10³	60	720	1000	60	1.447	0.480	0.0320	W10
R0878LC21L	2100	1800	878	7500	281 × 10³	65	720	1000	60	1.447	0.480	0.0320	W10
R0878LC21M	2100	1800	878	7500	281 × 10³	70	720	1000	60	1.447	0.480	0.0320	W10
R0929LC12A	1200	1200	929	9000	405 × 10³	10	150	1000	60	1.549	0.350	0.0320	W10
R0929LC12B	1200	1200	929	9000	405 × 10³	12	150	1000	60	1.549	0.350	0.0320	W10
R0929LC12C	1200	1200	929	9000	405 × 10³	15	150	1000	60	1.549	0.350	0.0320	W10

©2023 Littelfuse, Inc

Distributed Gate Thyristors—Capsule Types

Part Number	V_{DRM}	V_{RRM}	I_{TAV}	I_{TSM}	I^2t	t_q @ 200 V/µs	Typ. Reverse Recovery Charge @ T_{JM}			V_{TO}	r_T	R_{thJK} 180° sine	Fig. No.
			T_K = 55°C	10 ms ½ sine V_R - ≤60% V_{RRM}			Q_{rr}	@I_{TM}	@-di/dt	@ T_{JM}			
	V	V	A	A	A^2S	µs	µC	A	A/µs	V	mΩ	K/W	
R0964LC10C	1000	1000	964	9400	442×10^3	15	170	1000	60	1.530	0.309	0.0320	W10
R0964LC10D	1000	1000	964	9400	442×10^3	20	170	1000	60	1.530	0.309	0.0320	W10
R0964LC10E	1000	1000	964	9400	442×10^3	25	170	1000	60	1.530	0.309	0.0320	W10
R0964LC12C	1200	1200	964	9400	442×10^3	15	170	1000	60	1.530	0.309	0.0320	W10
R0964LC12D	1200	1200	964	9400	442×10^3	20	170	1000	60	1.530	0.309	0.0320	W10
R0964LC12E	1200	1200	964	9400	442×10^3	25	170	1000	60	1.530	0.309	0.0320	W10
R0990LC08A	800	800	990	11000	605×10^3	10	90	1000	60	1.350	0.350	0.0320	W10
R0990LC08B	800	800	990	11000	605×10^3	12	90	1000	60	1.350	0.350	0.0320	W10
R0990LC08C	800	800	990	11000	605×10^3	15	90	1000	60	1.350	0.350	0.0320	W10
R1045NC28L	2800	2800	1055	12500	781×10^3	60	950	1000	60	1.640	0.430	0.0240	W11
R1045NC28M	2800	2800	1055	12500	781×10^3	70	950	1000	60	1.640	0.430	0.0240	W11
R1045NC32L	3200	3200	1055	12500	781×10^3	60	950	1000	60	1.640	0.430	0.0240	W11
R1045NC32M	3200	3200	1055	12500	781×10^3	70	950	1000	60	1.640	0.430	0.0240	W11
R1124NC18J	1800	1800	1124	13500	0.91×10^6	50	640	1000	60	1.540	0.379	0.0240	W11
R1124NC18K	1800	1800	1124	13500	0.91×10^6	60	640	1000	60	1.540	0.379	0.0240	W11
R1124NC18L	1800	1800	1124	13500	0.91×10^6	65	640	1000	60	1.540	0.379	0.0240	W11
R1124NC18M	1800	1800	1124	13500	0.91×10^6	70	640	1000	60	1.540	0.379	0.0240	W11
R1124NC20J	2000	1800	1124	13500	0.91×10^6	50	640	1000	60	1.540	0.379	0.0240	W11
R1124NC20K	2000	1800	1124	13500	0.91×10^6	60	640	1000	60	1.540	0.379	0.0240	W11
R1124NC20L	2000	1800	1124	13500	0.91×10^6	65	640	1000	60	1.540	0.379	0.0240	W11
R1124NC20M	2000	1800	1124	13500	0.91×10^6	70	640	1000	60	1.540	0.379	0.0240	W11
R1124NC21J	2100	1800	1124	13500	0.91×10^6	50	640	1000	60	1.540	0.379	0.0240	W11
R1124NC21K	2100	1800	1124	13500	0.91×10^6	60	640	1000	60	1.540	0.379	0.0240	W11
R1124NC21L	2100	1800	1124	13500	0.91×10^6	65	640	1000	60	1.540	0.379	0.0240	W11
R1124NC21M	2100	1800	1124	13500	0.91×10^6	70	640	1000	60	1.540	0.379	0.0240	W11
R1127NC32P	3200	3200	1127	12800	819×10^3	120	3500	1000	60	1.500	0.474	0.0220	W11
R1127NC32R	3200	3200	1127	12800	819×10^3	140	3500	1000	60	1.500	0.474	0.0220	W11
R1127NC32S	3200	3200	1127	12800	819×10^3	160	3500	1000	60	1.500	0.474	0.0220	W11
R1127NC32T	3200	3200	1127	12800	819×10^3	200	3500	1000	60	1.500	0.474	0.0220	W11
R1127NC34R	3400	3400	1127	12800	819×10^3	140	3500	1000	60	1.500	0.474	0.0220	W11
R1127NC34S	3400	3400	1127	12800	819×10^3	160	3500	1000	60	1.500	0.474	0.0220	W11
R1127NC34T	3400	3400	1127	12800	819×10^3	200	3500	1000	60	1.500	0.474	0.0220	W11
R1127NC36R	3600	3600	1127	12800	819×10^3	140	3500	1000	60	1.500	0.474	0.0220	W11
R1127NC36S	3600	3600	1127	12800	819×10^3	160	3500	1000	60	1.500	0.474	0.0220	W11
R1127NC36T	3600	3600	1127	12800	819×10^3	200	3500	1000	60	1.500	0.474	0.0220	W11
R1158NC26N	2600	2600	1158	14500	1.05×10^6	100	1600	1000	60	1.600	0.400	0.0220	W11
R1158NC26P	2600	2600	1158	14500	1.05×10^6	120	1600	1000	60	1.600	0.400	0.0220	W11
R1158NC26T	2600	2600	1158	14500	1.05×10^6	200	1600	1000	60	1.600	0.400	0.0220	W11
R1178NC14E	1400	1400	1178	17000	1.45×10^6	25	320	1000	60	1.600	0.300	0.0240	W11
R1178NC14F	1400	1400	1178	17000	1.45×10^6	30	320	1000	60	1.600	0.300	0.0240	W11
R1178NC14G	1400	1400	1178	17000	1.45×10^6	35	320	1000	60	1.600	0.300	0.0240	W11
R1211NC12C	1200	1200	1211	17600	1.548×10^6	15	230	1000	60	1.720	0.230	0.0240	W11
R1211NC12D	1200	1200	1211	17600	1.548×10^6	20	230	1000	60	1.720	0.230	0.0240	W11
R1211NC12E	1200	1200	1211	17600	1.548×10^6	25	230	1000	60	1.720	0.230	0.0240	W11
R1271NC12B	1200	1200	1271	18000	1.62×10^6	12	200	1000	60	1.547	0.237	0.0240	W11
R1271NC12C	1200	1200	1271	18000	1.62×10^6	15	200	1000	60	1.547	0.237	0.0240	W11
R1271NC12D	1200	1200	1271	18000	1.62×10^6	20	200	1000	60	1.547	0.237	0.0240	W11
R1271NC12E	1200	1200	1271	18000	1.62×10^6	25	200	1000	60	1.547	0.237	0.0240	W11
R1275NC18L	1800	1800	1275	15500	1.20×10^6	65	940	1000	60	1.207	0.342	0.0240	W11
R1275NC18M	1800	1800	1275	15500	1.20×10^6	70	940	1000	60	1.207	0.342	0.0240	W11
R1275NC20L	2000	1800	1275	15500	1.20×10^6	65	940	1000	60	1.207	0.342	0.0240	W11
R1275NC20M	2000	1800	1275	15500	1.20×10^6	70	940	1000	60	1.207	0.342	0.0240	W11
R1275NC21L	2100	1800	1275	15500	1.20×10^6	65	940	1000	60	1.207	0.342	0.0240	W11
R1275NC21M	2100	1800	1275	15500	1.20×10^6	70	940	1000	60	1.207	0.342	0.0240	W11
R1279NC22J	2200	2200	1279	14800	1.10×10^6	50	1250	1000	60	1.440	0.330	0.0220	W11
R1279NC22K	2200	2200	1279	14800	1.10×10^6	60	1250	1000	60	1.440	0.330	0.0220	W11
R1279NC22L	2200	2200	1279	14800	1.10×10^6	65	1250	1000	60	1.440	0.330	0.0220	W11
R1279NC22M	2200	2200	1279	14800	1.10×10^6	70	1250	1000	60	1.440	0.330	0.0220	W11
R1279NC25J	2500	2500	1279	14800	1.10×10^6	50	1250	1000	60	1.440	0.330	0.0220	W11
R1279NC25K	2500	2500	1279	14800	1.10×10^6	60	1250	1000	60	1.440	0.330	0.0220	W11
R1279NC25L	2500	2500	1279	14800	1.10×10^6	65	1250	1000	60	1.440	0.330	0.0220	W11
R1279NC25M	2500	2500	1279	14800	1.10×10^6	70	1250	1000	60	1.440	0.330	0.0220	W11
R1280NC21J	2100	2100	1280	14800	1.10×10^6	50	1200	1000	60	1.440	0.330	0.0220	W11
R1280NC21K	2100	2100	1280	14800	1.10×10^6	60	1200	1000	60	1.440	0.330	0.0220	W11

W11
Weight 510 g

W46
Weight 1.2 kg

W79
Weight 890 g

W13
Weight 1.7 kg

W70
Weight 550 g

Distributed Gate Thyristors–Capsule Types

Part Number	V_{DRM}	V_{RRM}	I_{TAV}	I_{TSM}	I^2t	t_q	Typ. Reverse Recovery Charge @ T_{JM}			V_{TO}	r_T	R_{thJK}	Fig. No.
			T_K = 55°C	10 ms ½ sine V_R - ≤60% V_{RRM}		@ 200 V/µs	Q_{rr}	@I_{TM}	@-di/dt	@ T_{JM}		180° sine	
	V	V	A	A	A^2S	µs	µC	A	A/µs	V	mΩ	K/W	
R1280NC21L	2100	2100	1280	14800	1.10×10^6	65	1200	1000	60	1.440	0.330	0.0220	W11
R1280NC21M	2100	2100	1280	14800	1.10×10^6	70	1200	1000	60	1.440	0.330	0.0220	W11
R1280NC22J	2200	2100	1280	14800	1.10×10^6	50	1200	1000	60	1.440	0.330	0.0220	W11
R1280NC22K	2200	2100	1280	14800	1.10×10^6	60	1200	1000	60	1.440	0.330	0.0220	W11
R1280NC22L	2200	2100	1280	14800	1.10×10^6	65	1200	1000	60	1.440	0.330	0.0220	W11
R1280NC22M	2200	2100	1280	14800	1.10×10^6	70	1200	1000	60	1.440	0.330	0.0220	W11
R1280NC25J	2500	2100	1280	14800	1.10×10^6	50	1200	1000	60	1.440	0.330	0.0220	W11
R1280NC25K	2500	2100	1280	14800	1.10×10^6	60	1200	1000	60	1.440	0.330	0.0220	W11
R1280NC25L	2500	2100	1280	14800	1.10×10^6	65	1200	1000	60	1.440	0.330	0.0220	W11
R1280NC25M	2500	2100	1280	14800	1.10×10^6	70	1200	1000	60	1.440	0.330	0.0220	W11
R1331NC10B	1000	1000	1331	18200	1.66×10^6	12	200	1000	60	1.450	0.285	0.0220	W11
R1331NC10C	1000	1000	1331	18200	1.66×10^6	15	200	1000	60	1.450	0.285	0.0220	W11
R1331NC10D	1000	1000	1331	18200	1.66×10^6	20	200	1000	60	1.450	0.285	0.0220	W11
R1331NC12B	1200	1200	1331	18200	1.66×10^6	12	200	1000	60	1.450	0.285	0.0220	W11
R1331NC12C	1200	1200	1331	18200	1.66×10^6	15	200	1000	60	1.450	0.285	0.0220	W11
R1331NC12D	1200	1200	1331	18200	1.66×10^6	20	200	1000	60	1.450	0.285	0.0220	W11
R1446NC12C	1200	1200	1446	19500	1.90×10^6	15	300	1000	60	1.304	0.199	0.0240	W11
R1446NC12D	1200	1200	1446	19500	1.90×10^6	20	300	1000	60	1.304	0.199	0.0240	W11
R1446NC12E	1200	1200	1446	19500	1.90×10^6	25	300	1000	60	1.304	0.199	0.0240	W11
R1446NC12F	1200	1200	1446	19500	1.90×10^6	30	300	1000	60	1.304	0.199	0.0240	W11
R1448NC14H	1400	1400	1448	15500	1.20×10^6	40	950	1000	60	1.300	0.250	0.0220	W11
R1448NC14J	1400	1400	1448	15500	1.20×10^6	50	950	1000	60	1.300	0.250	0.0220	W11
R1448NC18H	1800	1800	1448	15500	1.20×10^6	40	950	1000	60	1.300	0.250	0.0220	W11
R1448NC18J	1800	1800	1448	15500	1.20×10^6	50	950	1000	60	1.300	0.250	0.0220	W11
R1448NC20H	2000	2000	1448	15500	1.20×10^6	40	950	1000	60	1.300	0.250	0.0220	W11
R1448NC20J	2000	2000	1448	15500	1.20×10^6	50	950	1000	60	1.300	0.250	0.0220	W11
R1448NC20K	2000	2000	1448	15500	1.20×10^6	60	950	1000	60	1.300	0.250	0.0220	W11
R1448NC20L	2000	2000	1448	15500	1.20×10^6	65	950	1000	60	1.300	0.250	0.0220	W11
R1448NC20M	2000	2000	1448	15500	1.20×10^6	70	950	1000	60	1.300	0.250	0.0220	W11
R1605MC20E	2000	2000	1605	20700	2.14×10^6	25	900	1000	60	2.100	0.200	0.0150	W70
R1605MC20F	2000	2000	1605	20700	2.14×10^6	30	900	1000	60	2.100	0.200	0.0150	W70
R1605MC20G	2000	2000	1605	20700	2.14×10^6	35	900	1000	60	2.100	0.200	0.0150	W70
R1605MC20H	2000	2000	1605	20700	2.14×10^6	40	900	1000	60	2.100	0.200	0.0150	W70
R1605MC20J	2000	2000	1605	20700	2.14×10^6	50	900	1000	60	2.100	0.200	0.0150	W70
R1605MC22E	2200	2200	1605	20700	2.14×10^6	25	900	1000	60	2.100	0.200	0.0150	W70
R1605MC22F	2200	2200	1605	20700	2.14×10^6	30	900	1000	60	2.100	0.200	0.0150	W70
R1605MC22G	2200	2200	1605	20700	2.14×10^6	35	900	1000	60	2.100	0.200	0.0150	W70
R1605MC22H	2200	2200	1605	20700	2.14×10^6	40	900	1000	60	2.100	0.200	0.0150	W70
R1605MC22J	2200	2200	1605	20700	2.14×10^6	50	900	1000	60	2.100	0.200	0.0150	W70
R1700MC18E	1800	1800	1700	20000	2.0×10^6	25	1400	1000	60	1.600	0.250	0.0150	W70
R1700MC18F	1800	1800	1700	20000	2.0×10^6	30	1400	1000	60	1.600	0.250	0.0150	W70
R1700MC18G	1800	1800	1700	20000	2.0×10^6	35	1400	1000	60	1.600	0.250	0.0150	W70
R1700MC18H	1800	1800	1700	20000	2.0×10^6	40	1400	1000	60	1.600	0.250	0.0150	W70
R1700MC18J	1800	1800	1700	20000	2.0×10^6	50	1400	1000	60	1.600	0.250	0.0150	W70
R1700MC21E	2100	1800	1700	20000	2.0×10^6	25	1400	1000	60	1.600	0.250	0.0150	W70
R1700MC21F	2100	1800	1700	20000	2.0×10^6	30	1400	1000	60	1.600	0.250	0.0150	W70
R1700MC21G	2100	1800	1700	20000	2.0×10^6	35	1400	1000	60	1.600	0.250	0.0150	W70

©2023 Littelfuse, Inc

Distributed Gate Thyristors–Capsule Types

Part Number	V_{DRM}	V_{RRM}	I_{TAV}	I_{TSM}	I^2t	t_q @ 200 V/µs	Typ. Reverse Recovery Charge @ T_{JM}			V_{TO}	r_T	R_{thJK} 180° sine	Fig. No.
			T_K = 55°C	10 ms ½ sine V_R - ≤60% V_{RRM}			Q_{rr}	@I_{TM}	@-di/dt	@ T_{JM}			
	V	V	A	A	A^2S	µs	µC	A	A/µs	V	mΩ	K/W	
R1700MC21H	2100	1800	1700	20000	2.0×10^6	40	1400	1000	60	1.600	0.250	0.0150	W70
R1700MC21J	2100	1800	1700	20000	2.0×10^6	50	1400	1000	60	1.600	0.250	0.0150	W70
R1955MC14D	1400	1400	1955	26500	3.51×10^6	20	1000	1000	60	1.460	0.910	0.0150	W70
R1955MC14E	1400	1400	1955	26500	3.51×10^6	25	1000	1000	60	1.460	0.910	0.0150	W70
R1955MC14F	1400	1400	1955	26500	3.51×10^6	30	1000	1000	60	1.460	0.910	0.0150	W70
R1955MC16D	1600	1600	1955	26500	3.51×10^6	20	1000	1000	60	1.460	0.910	0.0150	W70
R1955MC16E	1600	1600	1955	26500	3.51×10^6	25	1000	1000	60	1.460	0.910	0.0150	W70
R1955MC16F	1600	1600	1955	26500	3.51×10^6	30	1000	1000	60	1.460	0.910	0.0150	W70
R2075MC12A	1200	1200	2075	29000	4.21×10^6	10	300	1000	60	1.390	0.167	0.0150	W70
R2075MC12B	1200	1200	2075	29000	4.21×10^6	12	300	1000	60	1.390	0.167	0.0150	W70
R2075MC12C	1200	1200	2075	29000	4.21×10^6	15	300	1000	60	1.390	0.167	0.0150	W70
R2295HA22F	2200	2200	2295	30000	4.50×10^6	30	875	1000	60	1.690	0.190	0.0110	W79
R2295HA22H	2200	2200	2295	30000	4.50×10^6	40	875	1000	60	1.690	0.190	0.0110	W79
R2475ZC28M	2800	2800	2475	31000	4.81×10^6	70	3900	4000	60	1.504	0.174	0.0110	W13
R2475ZC28N	2800	2800	2475	31000	4.81×10^6	100	3900	4000	60	1.504	0.174	0.0110	W13
R2475ZC28R	2800	2800	2475	31000	4.81×10^6	140	3900	4000	60	1.504	0.174	0.0110	W13
R2475ZD28M	2800	2800	2475	31000	4.81×10^6	70	3900	4000	60	1.504	0.174	0.0110	W46
R2475ZD28N	2800	2800	2475	31000	4.81×10^6	100	3900	4000	60	1.504	0.174	0.0110	W46
R2475ZD28R	2800	2800	2475	31000	4.81×10^6	140	3900	4000	60	1.504	0.174	0.0110	W46
R2619ZC18J	1800	1800	2619	33800	5.71×10^6	50	1850	4000	60	1.308	0.173	0.0110	W13
R2619ZC18K	1800	1800	2619	33800	5.71×10^6	60	1850	4000	60	1.308	0.173	0.0110	W13
R2619ZC18L	1800	1800	2619	33800	5.71×10^6	65	1850	4000	60	1.308	0.173	0.0110	W13
R2619ZC20J	2000	2000	2619	33800	5.71×10^6	50	1850	4000	60	1.308	0.173	0.0110	W13
R2619ZC20K	2000	2000	2619	33800	5.71×10^6	60	1850	4000	60	1.308	0.173	0.0110	W13
R2619ZC20L	2000	2000	2619	33800	5.71×10^6	65	1850	4000	60	1.308	0.173	0.0110	W13
R2619ZC21J	2100	2100	2619	33800	5.71×10^6	50	1850	4000	60	1.308	0.173	0.0110	W13
R2619ZC21K	2100	2100	2619	33800	5.71×10^6	60	1850	4000	60	1.308	0.173	0.0110	W13
R2619ZC21L	2100	2100	2619	33800	5.71×10^6	65	1850	4000	60	1.308	0.173	0.0110	W13
R2619ZC25J	2500	2100	2619	33800	5.71×10^6	50	1850	4000	60	1.308	0.173	0.0110	W13
R2619ZC25K	2500	2100	2619	33800	5.71×10^6	60	1850	4000	60	1.308	0.173	0.0110	W13
R2619ZC25L	2500	2100	2619	33800	5.71×10^6	65	1850	4000	60	1.308	0.173	0.0110	W13
R2619ZD18J	1800	1800	2619	33800	5.71×10^6	50	1850	4000	60	1.308	0.173	0.0110	W46
R2619ZD18K	1800	1800	2619	33800	5.71×10^6	60	1850	4000	60	1.308	0.173	0.0110	W46
R2619ZD18L	1800	1800	2619	33800	5.71×10^6	65	1850	4000	60	1.308	0.173	0.0110	W46
R2619ZD20J	2000	2000	2619	33800	5.71×10^6	50	1850	4000	60	1.308	0.173	0.0110	W46
R2619ZD20K	2000	2000	2619	33800	5.71×10^6	60	1850	4000	60	1.308	0.173	0.0110	W46
R2619ZD20L	2000	2000	2619	33800	5.71×10^6	65	1850	4000	60	1.308	0.173	0.0110	W46
R2619ZD21J	2100	2100	2619	33800	5.71×10^6	50	1850	4000	60	1.308	0.173	0.0110	W46
R2619ZD21K	2100	2100	2619	33800	5.71×10^6	60	1850	4000	60	1.308	0.173	0.0110	W46
R2619ZD21L	2100	2100	2619	33800	5.71×10^6	65	1850	4000	60	1.308	0.173	0.0110	W46
R2619ZD25J	2500	2100	2619	33800	5.71×10^6	50	1850	4000	60	1.308	0.173	0.0110	W46
R2619ZD25K	2500	2100	2619	33800	5.71×10^6	60	1850	4000	60	1.308	0.173	0.0110	W46
R2619ZD25L	2500	2100	2619	33800	5.71×10^6	65	1850	4000	60	1.308	0.173	0.0110	W46
R2620ZC22J	2200	2200	2620	33800	5.71×10^6	50	2100	4000	60	1.500	0.143	0.0110	W13
R2620ZC22K	2200	2200	2620	33800	5.71×10^6	60	2100	4000	60	1.500	0.143	0.0110	W13
R2620ZC22L	2200	2200	2620	33800	5.71×10^6	65	2100	4000	60	1.500	0.143	0.0110	W13
R2620ZC25J	2500	2500	2620	33800	5.71×10^6	50	2100	4000	60	1.500	0.143	0.0110	W13
R2620ZC25K	2500	2500	2620	33800	5.71×10^6	60	2100	4000	60	1.500	0.143	0.0110	W13
R2620ZC25L	2500	2500	2620	33800	5.71×10^6	65	2100	4000	60	1.500	0.143	0.0110	W13
R2620ZD22J	2200	2200	2620	33800	5.71×10^6	50	2100	4000	60	1.500	0.143	0.0110	W46
R2620ZD22K	2200	2200	2620	33800	5.71×10^6	60	2100	4000	60	1.500	0.143	0.0110	W46
R2620ZD22L	2200	2200	2620	33800	5.71×10^6	65	2100	4000	60	1.500	0.143	0.0110	W46
R2620ZD25J	2500	2500	2620	33800	5.71×10^6	50	2100	4000	60	1.500	0.143	0.0110	W46
R2620ZD25K	2500	2500	2620	33800	5.71×10^6	60	2100	4000	60	1.500	0.143	0.0110	W46
R2620ZD25L	2500	2500	2620	33800	5.71×10^6	65	2100	4000	60	1.500	0.143	0.0110	W46
R2714ZC14H	1400	1400	2714	35600	6.34×10^6	40	1400	4000	60	1.250	0.163	0.0110	W13
R2714ZC14J	1400	1400	2714	35600	6.34×10^6	50	1400	4000	60	1.250	0.163	0.0110	W13
R2714ZC14K	1400	1400	2714	35600	6.34×10^6	60	1400	4000	60	1.250	0.163	0.0110	W13
R2714ZC18H	1800	1800	2714	35600	6.34×10^6	40	1400	4000	60	1.250	0.163	0.0110	W13
R2714ZC18J	1800	1800	2714	35600	6.34×10^6	50	1400	4000	60	1.250	0.163	0.0110	W13
R2714ZC18K	1800	1800	2714	35600	6.34×10^6	60	1400	4000	60	1.250	0.163	0.0110	W13
R2714ZD14H	1400	1400	2714	35600	6.34×10^6	40	1400	4000	60	1.250	0.163	0.0110	W46
R2714ZD14J	1400	1400	2714	35600	6.34×10^6	50	1400	4000	60	1.250	0.163	0.0110	W46
R2714ZD14K	1400	1400	2714	35600	6.34×10^6	60	1400	4000	60	1.250	0.163	0.0110	W46

W11
Weight 510 g

W36
Weight 500 g

W81
Weight 1.2 kg

W13
Weight 1.7 kg

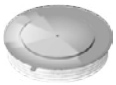
W46
Weight 1.2 kg

W107
Weight 1.6 kg

W34
Weight 120 g

W58
Weight 90 g

W118
Weight 2.2 kg

Distributed Gate Thyristors–Capsule Types

Part Number	V_{DRM}	V_{RRM}	I_{TAV}	I_{TSM}	I^2t	t_q	Typ. Reverse Recovery Charge @ T_{JM}			V_{TO}	r_T	R_{thJK}	Fig. No.
			$T_K = 55°C$	10 ms ½ sine V_R - ≤60% V_{RRM}		@ 200 V/µs	Q_{rr}	@I_{TM}	@-di/dt	@ T_{JM}		180° sine	
	V	V	A	A	A^2S	µs	µC	A	A/µs	V	mΩ	K/W	
R2714ZD18H	1800	1800	2714	35600	6.34×10^6	40	1400	4000	60	1.250	0.163	0.0110	W46
R2714ZD18J	1800	1800	2714	35600	6.34×10^6	50	1400	4000	60	1.250	0.163	0.0110	W46
R2714ZD18K	1800	1800	2714	35600	6.34×10^6	60	1400	4000	60	1.250	0.163	0.0110	W46
R3115TJ24J	2400	2400	3115	56000	15.68×10^6	50	3350	2000	60	1.884	0.120	0.0080	W81
R3115TJ24K	2400	2400	3115	56000	15.68×10^6	60	3350	2000	60	1.884	0.120	0.0080	W81
R3115TJ28J	2800	2800	3115	56000	15.68×10^6	50	3350	2000	60	1.884	0.120	0.0080	W81
R3115TJ28K	2800	2800	3115	56000	15.68×10^6	60	3350	2000	60	1.884	0.120	0.0080	W81
R3370ZC12C	1200	1200	3370	43900	9.64×10^6	15	600	4000	60	1.353	0.064	0.0110	W13
R3370ZC12D	1200	1200	3370	43900	9.64×10^6	20	600	4000	60	1.353	0.064	0.0110	W13
R3370ZC12E	1200	1200	3370	43900	9.64×10^6	25	600	4000	60	1.353	0.064	0.0110	W13
R3370ZD12C	1200	1200	3370	43900	9.64×10^6	15	600	4000	60	1.353	0.064	0.0110	W46
R3370ZD12D	1200	1200	3370	43900	9.64×10^6	20	600	4000	60	1.353	0.064	0.0110	W46
R3370ZD12E	1200	1200	3370	43900	9.64×10^6	25	600	4000	60	1.353	0.064	0.0110	W46
R4680EA24K	2400	2400	4680	67000	22.40×10^6	60	3000	1000	60	1.509	0.128	0.0050	W107
R4680EA24L	2400	2400	4680	67000	22.40×10^6	65	3000	1000	60	1.509	0.128	0.0050	W107
R4680EA24M	2400	2400	4680	67000	22.40×10^6	70	3000	1000	60	1.509	0.128	0.0050	W107
R4680EA28K	2800	2800	4680	67000	22.40×10^6	60	3000	1000	60	1.509	0.128	0.0050	W107
R4680EA28L	2800	2800	4680	67000	22.40×10^6	65	3000	1000	60	1.509	0.128	0.0050	W107
R4680EA28M	2800	2800	4680	67000	22.40×10^6	70	3000	1000	60	1.509	0.128	0.0050	W107
R5145FA42V	4200	4500	5145	66000	21.78×10^6	250	12000	4000	60	1.659	0.107	0.0045	W118
R5145FA42W	4200	4500	5145	66000	21.78×10^6	300	12000	4000	60	1.659	0.107	0.0045	W118
R5145FA45V	4500	4500	5145	66000	21.78×10^6	250	12000	4000	60	1.659	0.107	0.0045	W118
R5145FA45W	4500	4500	5145	66000	21.78×10^6	300	12000	4000	60	1.659	0.107	0.0045	W118
R5370EA18J	1800	1800	5370	70000	24.5×10^6	50	3000	1000	60	1.661	0.071	0.0050	W107
R5370EA18K	1800	1800	5370	70000	24.5×10^6	60	3000	1000	60	1.661	0.071	0.0050	W107
R5370EA22J	2200	2200	5370	70000	24.5×10^6	50	3000	1000	60	1.661	0.071	0.0050	W107
R5370EA22K	2200	2200	5370	70000	24.5×10^6	60	3000	1000	60	1.661	0.071	0.0050	W107

©2023 Littelfuse, Inc

Asymmetric Thyristors

These devices are available up to a voltage of 2800 V. They exhibit quick turn-on times and are capable of high values in both critical

di/dt and dv/dt. For the device type, they also exhibit high current ratings in excess of 1000 A. Asymmetric construction optimizes the forward losses against the turn-off losses and provides the best performance in their voltage class.

Part Number	V_{DRM}	V_{RRM}	I_{TAV}	I_{TSM}	I^2t	t_{gd} 25°C typ.	typ. tq @ 200 V/ µs	$(di/dt)_{cr}$ @ T_{JM}	$(dv/dt)_{cr}$ @ T_{JM}	V_{TO}	r_T	T_{JM}	R_{thJK} 180° sine	Fig. No.
			T_K = 55°C	10 ms ½ sine						@ T_{JM}				
	V	V	A	A	A^2S	µs	µC	A/µs	V/µs	V	mΩ	°C	K/W	
A0516YC240	2400	10	516	5700	151×10^3	0.5	55.00	2000	3000	1.630	0.850	125	0.0500	W58
A0516YC280	2800	10	516	5700	151×10^3	0.5	55.00	2000	3000	1.630	0.850	125	0.0500	W58
A1237NC240	2400	30	1237	18000	1.62×10^6	0.9	30.00	2000	3000	1.707	0.212	125	0.0240	W11
A1237NC280	2800	30	1237	18000	1.62×10^6	0.9	30.00	2000	3000	1.707	0.212	125	0.0240	W11

Pulse Thyristors

IXYS UK Westcode Ltd. is at the forefront of solid state pulsed power technology, offering custom solutions to complex pulsed power problems.

Standard Devices with voltage ratings to 2.5 kV, pulsed currents to 50 kA peak, and di/dt capabilities of over 30 kA/µs are available. Please consult the factory for other requirements for voltage ratings up to 4.5kV and pulsed current ratings >200 kA.

Part Number	V_{DRM} V_{GK} = 2 V	V_{RRM}	V_{DC} V_{GK} = 2 V	I_{PULSE}	$(di/dt)_{cr}$	V_{TO}	r_T	T_{JM}	R_{thJC} 180° sine	Fig. No.
						@ T_{JM}				
	V	V	V	kA	kA/µs	V	mΩ	°C	K/W	
Y200CKC250	2500	2000	1500	20	5	1.216	2.20	125	0.065	W34
Y500CNC250	2500	2000	1500	50	11	1.755	1.12	125	0.027	W36

Gate Turn-Off Thyristors

IXYS UK offers a broad range of high-specification devices with voltage ratings to 4.5 kV (2.8 kV DC link) and controllable current ratings of up to 4 kA , which are available to meet the toughest demands in applications such as traction propulsion and auxiliaries, AC industrial drives, FACTs, and active VAr controllers. We offer both symmetrical devices for applications with a reverse blocking requirement (e.g., current sourced inverters) and asymmetric blocking devices for applications where no reverse blocking requirement exists (e.g., voltage sourced inverters).

Gate turn-off thyristors are still the component of choice when it comes to very high power converters, and we remain totally committed to this technology for the foreseeable future through our active program for continued product improvement.

W34
Weight 120 g

W40
Weight 430 g

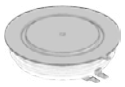
W67
Weight 650 g

W87
Weight 250 g

W35
Weight 300 g

W41
Weight 1.2 kg

W85
Weight 990 g

W93
Weight 90 g

W36
Weight 500 g

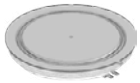
W45
Weight 2 kg

W86
Weight 1.24 kg

W104
Weight 1.5 kg

Part Number	V_{DRM} V_{GK} = -2 V	V_{RRM}	I_{TGQM} @ C_S		I_{TAV} T_K = 55°C	I_{TSM} 10 ms	I^2t ½ sine VR ≤ 10 V	Typ. Switching Times t_{gt}	t_{gq}	V_T $I_T = I_{TGQM}$	T_{JM}	R_{thJC} 180° sine	Fig. No.
	V	V	A	µC	A	kA	kA²s	µs	µs	V	°C	K/W	
G1000NC45B	4500	18	1000	2.0	545	8.00	320×10^3	3.5	15.00	4.000	125	0.0270	W36
G1000QC25B	2500	18	1000	1.0	615	8.00	320×10^3	2.8	13.00	2.500	125	0.0380	W35
G1000QC45B	4500	18	1000	1.0	443	6.50	211×10^3	3.4	14.00	4.000	125	0.0380	W35
G2000HF250	2500	18	2000	4.0	1030	16.00	1.28×10^6	3.0	25.00	2.800	125	0.0220	W85
G2000HF450	4500	18	2000	4.0	890	13.70	938×10^3	4.0	25.00	3.500	125	0.0220	W85
G2500HF250	2500	18	2500	6.0	1085	16.00	1.28×10^6	3.0	25.00	3.100	125	0.0200	W85
G3000TF250	2500	18	3000	5.0	1690	30.00	4.5×10^6	3.5	26.00	2.500	125	0.0120	W86
G3000TF450	4500	18	3000	6.0	1381	24.00	2.88×10^6	4.0	22.00	4.000	125	0.0120	W86
G4000EF250	2500	18	4000	6.0	2005	32.00	5.12×10^6	4.5	28.00	3.000	125	0.0110	W104
G4000EF450	4500	18	4000	6.0	1480	26.00	3.38×10^6	4.0	30.00	4.400	125	0.0110	W104
H0500KC200	2000	2000	500	1.0	280	3.00	45×10^3	2.0	5.00	3.200	125	0.0650	W34
H0500KC20Y	2000	100	500	1.0	280	3.00	45×10^3	2.0	5.00	3.200	125	0.0650	W34
H0500KC25D	2500	2000	500	1.0	280	3.00	45×10^3	2.0	5.00	3.200	125	0.0650	W34
H0500KC25Y	2500	100	500	1.0	280	3.00	45×10^3	2.0	5.00	3.200	125	0.0650	W34
H0700KC140	1400	1400	700	1.5	360	4.00	80×10^3	3.0	5.00	2.800	125	0.0630	W34
H0700KC14Y	1400	100	700	1.5	360	4.00	80×10^3	3.0	5.00	2.800	125	0.0630	W34
H0700KC17D	1700	1400	700	1.5	360	4.00	80×10^3	3.0	5.00	2.800	125	0.0630	W34
H0700KC17Y	1700	100	700	1.5	360	4.00	80×10^3	3.0	5.00	2.800	125	0.0630	W34
H1200NC200	2000	2000	1200	3.0	670	10.50	550×10^3	3.0	12.00	3.300	125	0.0270	W36
H1200NC20Y	2000	100	1200	3.0	670	10.50	550×10^3	3.0	12.00	3.300	125	0.0270	W36
H1200NC25D	2500	2000	1200	3.0	670	10.50	550×10^3	3.0	12.00	3.300	125	0.0270	W36
H1200NC25Y	2500	100	1200	3.0	670	10.50	550×10^3	3.0	12.00	3.300	125	0.0270	W36
S0300SR12Y	1200	100	480	1.0	215	3.50	61.2×10^3	3.5	9.00	2.400	125	0.1300	W87
S0500YC20Y	2000	100	500	1.0	275	4.00	80×10^3	3.5	10.00	2.500	125	0.0870	W93
S0500YC25Y	2500	100	500	1.0	275	4.00	80×10^3	3.5	10.00	2.500	125	0.0870	W93
S0500KC200	2000	2000	500	1.0	330	4.00	80×10^3	3.5	10.00	2.500	125	0.0650	W34
S0500KC20Y	2000	100	500	1.0	330	4.00	80×10^3	3.5	10.00	2.500	125	0.0650	W34
S0500KC25D	2500	2000	500	1.0	330	4.00	80×10^3	3.5	10.00	2.500	125	0.0650	W34
S0500KC25Y	2500	100	500	1.0	330	4.00	80×10^3	3.5	10.00	2.500	125	0.0650	W34
S0700KC140	1400	1400	700	1.5	430	5.00	125×10^3	3.0	10.00	2.200	125	0.0630	W34
S0700KC14Y	1400	100	700	1.5	430	5.00	125×10^3	3.0	10.00	2.200	125	0.0630	W34
S0700KC17D	1700	1400	700	1.5	430	5.00	125×10^3	3.0	10.00	2.200	125	0.0630	W34
S0700KC17Y	1700	100	700	1.5	430	5.00	125×10^3	3.0	10.00	2.200	125	0.0630	W34
S1200NC200	2000	2000	1200	3.0	790	13.00	840×10^3	4.5	19.00	2.700	125	0.0270	W36
S1200NC20Y	2000	100	1200	3.0	790	13.00	840×10^3	4.5	19.00	2.700	125	0.0270	W36
S1200NC25D	2500	2000	1200	3.0	790	13.00	840×10^3	4.5	19.00	2.700	125	0.0270	W36
S1200NC25Y	2500	100	1200	3.0	790	13.00	840×10^3	4.5	19.00	2.700	125	0.0270	W36

©2023 Littelfuse, Inc

Insulated Gate Bi-polar Transistors

As a pioneer of Press-Pack IGBT technology, we are able to offer a range of class-leading devices with voltage ratings of 1.7 kV (900 V DC link), 3.3 kV (1.8 kV DC link), 4.5 kV (2.8 kV DC link), and 6.5 kV (3.6 kV DC link). The construction of these devices is totally free from wires and solder bonds, which all but eliminates the problems of mechanical fatigue associated with conventional modules. Internal stray inductance in both the gate connections and emitter connections is vastly reduced when compared to conventional modules, leading to improved ruggedness and short circuit behavior, which is further enhanced by the direct cooling of the emitter side of the chip.

These devices are based on a state-of-the-art soft punch through (SPT++) process, which yields exceptional values of VCE(sat) and soft switching behavior despite the high voltage ratings. The devices feature a positive temperature coefficient, making them suitable for reliable parallel operation. Devices are available with or without integral anti-parallel diode; a range of complimentary high-power sonice diodes optimized for use with these IGBTs is now accessible, with a new generation using improved technology currently in development. Please contact your representative for more information.

Press-pack IGBTs exhibit exceptional power cycling performance that is typically an order of magnitude better than other modules, making them highly suited to applications in which there are repeated cyclic power demands, such as in metals and traction drive systems. Press-pack IGBTs have a stable short circuit failure mode which, given its safety benefits, make them an ideal choice for medium- and high-voltage applications in which series connection is required. Stable short circuit failure mode allows for the design in of n+ redundancy without additional bypass switches and costly explosion proof enclosures. Typical examples include HVDC, FACTs, Active VAr controllers/compensators, and medium-voltage drives. In applications above 4 MW, press-pack IGBTs offer exceptional power density that far exceeds that which is achievable with comparable modules in multi-level/MMC-based converters.

These PPIGBT are largely backward-compatible with standard 4.5 kV GTOs in many applications, such as AC drives. Thus, these parts are a simple and economical path to upgrade or refurbish equipment that previously used GTOs, such as locomotives or medium-voltage drives.

They are suitable for all cooling options, including direct liquid immersion. Complementary gate drives, mounting clamps, and passive components are all available.

Capsule Types

Part Number	V_{CES}	I_C	I_{CM}	$V_{CE(sat)}$ @ I_C	IGBT Switching Typical		V_F $I_F = I_C$	Diode Recovery Typical			T_{JM}	R_{thJK}		Fig. No.
					E_{ON}	E_{OFF}		I_{rm}	t_{rr}	Q_r		IGBT	Diode	
	V	A	A	V	J	J	V	A	µs	µC	°C	K/W	K/W	
T0600NC17A	1700	600	1200	3.0	0.3	0.50	2.250	300.000	0.500	175.000	125	0.0541	0.1250	W40
T0840NC17E	1700	840	1680	3.0	0.4	0.70	N/A	N/A	N/A	N/A	125	0.0386	N/A	W40
T0960VC17G	1700	960	1920	3.0	0.5	0.80	2.050	540.000	0.600	310.000	125	0.0338	0.0625	W67
T1440VC17E	1700	1440	2880	3.0	0.7	1.20	N/A	N/A	N/A	N/A	125	0.0225	N/A	W67
T0140QC33G	3300	140	280	3.4	0.4	0.38	3.000	100.000	1.900	150.000	125	0.1080	0.1728	W109
T0285NC33E	3300	285	570	3.4	0.7	0.75	N/A	N/A	N/A	N/A	125	0.0546	N/A	W40
T0425VC33G	3300	425	850	3.4	1.1	1.12	3.000	305.000	1.700	440.000	125	0.0364	0.0576	W67
T0640VC33E	3300	640	1280	3.4	1.7	1.68	N/A	N/A	N/A	N/A	125	0.0243	N/A	W67
T0710TC33A	3300	710	1420	3.4	1.8	1.87	3.300	455.000	1.500	655.000	125	0.0218	0.0432	W41
T1000TC33E	3300	1000	2000	3.4	2.6	2.70	N/A	N/A	N/A	N/A	125	0.0156	N/A	W41
T1000EC33G	3300	1000	2000	3.4	2.6	2.70	3.000	470.000	1.700	1040.000	125	0.0156	0.0247	W44
T1500EC33E	3300	1500	3000	3.4	3.9	4.05	N/A	N/A	N/A	N/A	125	0.0104	N/A	W44
T2000GC33G	3300	2000	4000	3.4	5.2	5.40	3.000	940.000	2.200	2070.000	125	0.0078	0.0123	W45
T3000GC33E	3300	3000	6000	3.4	3.1	8.00	N/A	N/A	N/A	N/A	125	0.0052	N/A	W45

W40
Weight 430 g

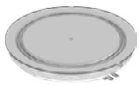
W45
Weight 2 kg

W96
Weight 1.5 kg

W109
Weight 360 g

W41
Weight 1.2 kg

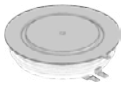
W67
Weight 650 g

W98
Weight 1.7 kg

W110
Weight 2.8 kg

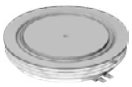
W44
Weight 1.2 kg

W95
Weight 825 g

W103
Weight 3.2 kg

IGBTs–Capsule Types

Part Number	V_{CES}	I_C	I_{CM}	$V_{CE(sat)}$ @ I_C	IGBT Switching Typical		V_F $I_F = I_C$	Diode Recovery Typical			T_{JM}	R_{thJK}		Fig. No.
					E_{ON}	E_{OFF}		I_{rm}	t_{rr}	Q_r		IGBT	Diode	
	V	A	A	V	J	J	V	A	µs	µC	°C	K/W	K/W	
T0115QB45G	4500	115	230	3.65	0.80	0.62	3.7	120	1.5	145	125	0.1080	0.172	W109
T0240NB45E	4500	240	480	3.6	1.50	1.00	N/A	N/A	N/A	N/A	125	0.0546	N/A	W40
T0340VB45G	4500	340	680	3.5	2.20	1.30	3.45	220	3.2	500	125	0.0364	0.0576	W67
T0510VB45E	4500	510	1020	3.5	3.30	2.20	N/A	N/A	N/A	N/A	125	0.0243	N/A	W67
T0600TB45A	4500	600	1200	3.7	3.60	2.50	3.7	640	1.2	700	125	0.0218	0.0432	W41
T0800TB45E	4500	800	1600	3.5	5.00	3.50	N/A	N/A	N/A	N/A	125	0.0156	N/A	W41
T0800EB45G	4500	800	1600	3.5	5.00	3.50	3.5	550	1.7	1020	125	0.0156	0.0247	W44
T0900EB45A	4500	900	1800	3.6	5.40	3.80	3.9	800	1.6	1000	125	0.0146	0.0288	W44
T1200EB45E	4500	1200	2400	3.6	7.00	5.50	N/A	N/A	N/A	N/A	125	0.0104	N/A	W44
T1600GB45G	4500	1600	3200	3.5	12.00	8.70	3.45	1270	1.75	1960	125	0.0078	0.0123	W45
T1800GB45A	4500	1800	3600	3.6	11.00	10.50	3.9	1600	1.6	2000	125	0.0073	0.0115	W45
T2000BB45G	4500	2000	4000	3.5	14.00	12.50	3.55	2050	1.6	2450	125	0.0064	0.0096	W110
T2400GB45E	4500	2400	4800	3.6	14.00	13.00	N/A	N/A	N/A	N/A	125	0.0052	N/A	W45
T2960BB45E	4500	3000	6000	3.6	11.50	17.50	N/A	N/A	N/A	N/A	125	0.0042	N/A	W110
T0258HF65G	6500	258	516	4.8	1.80	1.45	3.450	300	1.0	410	125	0.0328	0.0567	W95
T0385HF65E	6500	385	770	4.8	2.70	2.20	N/A	N/A	N/A	N/A	125	0.0219	N/A	W95
T0900AF65E	6500	900	1800	4.8	6.3	5.1	N/A	N/A	N/A	N/A	125	0.0094	N/A	W98
T0900DF65A	6500	900	1800	4.8	6.30	5.10	3.400	1050	1.0	1450	125	0.0094	0.0155	W96
T1290BF65A	6500	1290	2580	4.8	9.00	7.30	3.600	1400	1.0	1900	125	0.0066	0.0122	W103
T1375DF65E	6500	1375	2750	4.8	9.60	7.80	N/A	N/A	N/A	N/A	125	0.0062	N/A	W96
T1890BF65E	6500	1890	3780	4.8	13.20	10.60	N/A	N/A	N/A	N/A	125	0.0045	N/A	W103

©2023 Littelfuse, Inc

Press-Pack IGBT Gate Drive Units

The C044BG400 IGBT Gate Driver is a low-power consumption driver with on board VCE desaturation detection for high-reliability applications.

The driver features a fibre-optic communication interface for drive, status, and switching feedback signals. A fully supervised DC/DC converter with EMI filtering, low coupling capacitance, and high partial discharge level is integrated into the board. The high-voltage collector sense and gate interface are implemented on a separate card to allow close coupling to the IGBT. A range of pre-configured boards is available to complement IXYS UK's range of press-pack IGBTs — other applications upon request.

Gate Drive Part Number	IGBT Type
C0044BG400SCB	T0600NC17A
C0044BG400SCA	T0840NC17E
C0044BG400SCC	T0960VC17G
C0044BG400SCD	T1440VC17E
C0044BG400SCE	T1680TC17G
C0044BG400SCF	T0140QC33G
C0044BG400SCG	T0285NC33E
C0044BG400SCH	T0425VC33G
C0044BG400SCJ	T0640VC33E
C0044BG400SCK	T0710TC33A
C0044BG400SCM	T1000EC33G
C0044BG400SCL	T1000TC33E
C0044BG400SCN	T1500EC33E
C0044BG400SCS	T2000GC33G
C0044BG400SCT	T3000GC33E
C0044BG400SBX	T0115QB45G
C0044BG400SBL	T0240NB45E
C0044BG400SBQ	T0340VB45G
C0044BG400SBE	T0510VB45E
C0044BG400SBM	T0600TB45A
C0044BG400SBG	T0800EB45G
C0044BG400SBN	T0800TB45E
C0044BG400SBP	T0900EB45A
C0044BG400SBR	T1200EB45E
C0044BG400SBJ	T1600GB45G
C0044BG400SBS	T1800GB45A
C0044BG400SBZ	T2000BB45G
C0044BG400SBT	T2400GB45E
C0044BG400SBW	T2960BB45E

Features

- High reliability topology
- Designed for ultra low-power consumption
- Build-in DC/DC-converter with soft start
- Integrated input filter for low EMI
- Separate low-impedance path for parasitic EMI currents
- PD-Voltage levels available up to 11 kV on request.
- Low impedance from gate to emitter at start-up and power fail
- Monitoring of all secondary supply voltages
- Monitoring of IGBT switching status (VCE-de-sat detection)
- Soft switch-OFF at VCE-de-sat fault condition
- Fiber-optic links for switching commands and status control
- Low-light protection for input signals
- Short-pulse suppression (configurable)
- Balanced propagation delay time
- Gate current up to 44 A
- Optional gate-speed-up capacitors

Application

- Large and medium drives
- Renewable generation
- Utilities; scale converters

W116

Single Pre-Mounted Thyristors

Part Number	V_{RRM} V_{DRM}	I_{TAV}	@ T_C	I_{TRMS}	I_{TRMS} 125°C 10 ms	V_{T0}	r_T	T_{VJM}	R_{thJC} per Die	R_{thCH} per Die	Package
	V	A	°C	A	A	V	mΩ	°C	K/W	K/W	
N4340TJ180MBR	1800	1110	85	3500	55000	0.886	0.105	125	0.031	0.0035	W116
N4340TJ220MBR	2200	1110	85	3500	55000	0.886	0.105	125	0.031	0.0035	W116

Single Pre-Mounted Diodes

IXYS UK Westcode Ltd. has Underwriters Laboratories Inc. (UL) certificaiton for most modules.

Part Number	V_{RRM} V_{DRM}	I_{TAV}	@ T_C	I_{TRMS}	I_{TRMS} 150°C 10 ms	V_{T0}	r_T	T_{VJM}	R_{thJC} per Die	R_{thCH} per Die	Package
	V	A	°C	A	A	V	mΩ	°C	K/W	K/W	
W8570TJ180MBR	1800	2830	85	6435	70200	0.69	0.050	175	0.031	0.0035	W116
W8570TJ220MBR	2200	2830	85	6435	70200	0.69	0.050	175	0.031	0.0035	W116
W9830TJ120MBR	1200	3345	85	7280	72000	0.67	0.043	190	0.031	0.0035	W116
W9830TJ150MBR	1500	3345	85	7280	72000	0.67	0.043	190	0.031	0.0035	W116

©2023 Littelfuse, Inc

Power Semiconductor Accessories

With over 80 years of experience, our dedicated team of talented engineers delivers a wide variety of industry leading solutions ranging from simple standard sub-assemblies to complicated, multi-megawatt power systems.

The Power Electronic Stacks group has been an integral part of our core business since the early 1920s, when we began production on the first commercially available solid-state rectifiers.

Our dedicated global team of highly experienced specialists are on hand to provide our customers with first-class support on everything from a simple air-cooled rectifiers to highly integrated custom power converters.

Using the latest 3D modeling and simulation techniques, we can significantly reduce the cycle time from concept to fully developed design, minimizing risk and identifying opportunities for optimization early on in the project.

Our 300m^2 dedicated production facility in the UK is complemented by a well-equipped power lab and similar production facilities in Long Beach, California. These facilities are supported by an expanded team of engineers and technicians as well as continued investment and growth in this strategic area of our business.

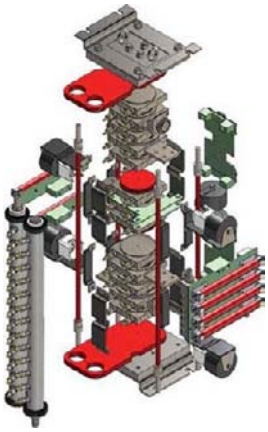

IGBT Assemblies

Our catalogue of standard press-pack IGBT assemblies include a range of 3-level inverters. Three separate designs are available: a totally independent 3.3kV system, a 6.6kV system, and a 10kV system. The 6.6kV and 10kV systems are based on the combination of two IGBT stacks and one diode stack. Each system benefits from direct water cooling to provide highly effective heat dissipation away from the devices and pre-loaded disc spring clamping to evenly distribute the applied force across the entire surface area of the device.

Also designed into each system are an integrated snubber circuit design and an isolated clamping rod system to limit the occurrence of Eddy currents within the unit.

Pulsed Power

As a pioneer in the development of solid-state pulsed power components and systems, we deliver anything from discrete components to fully integrated energy transfer switches. With systems successfully delivering voltage ratings of over 50kV and pulsed currents of up to 140kA, we have a wealth of experience at your disposal. Our modular design solutions based on either pulse thyristor or press-pack IGBT technology. Our integration of control and protection functions provides you with a flexible "black-box" approach to energy transfer problems.

We are involved with pulsed power on a global basis, working with prestigious research organizations such as CERN, Switzerland as well as medium-voltage manufacturers for emerging commercial applications such as laser supplies, PUV and PEF sterilization, magnetization, and metal forming.

Traction Applications

With over 40 years of experience, our dedicated team of engineers provides solutions to a wide range of design problems, ranging from simple trackside rectifiers to complex propulsion converters.

The Power Electronic Stacks group pioneered the early development of solid-state converters for traction systems in the late 1950s as part of the Westinghouse Brake & Signal Company. Over the years, we have gained an enviable reputation within the rail sector as a solution provider.

By leveraging our experience and broad network of contacts within the industry, we can offer assistance in tackling issues such as component obsolescence, improving power equipment reliability, contract maintenance of power modules, refurbishment of power electronics, upgrades to existing systems and, of course, subcontracting manufacturers for new projects.

Working systematically to the highest international standards, we can give your equipment a new lease on life and help protect your investments in these valuable assets.

Component obsolescence is becoming a significant problem for the rail sector, as equipment design life invariably exceeds that of the modern power electronics components. Our highly skilled team of engineers can re-engineer older equipment to incorporate the latest technology whilst maintaining compatibility.

As equipment reaches its half-life, many of its major power components will reach the end of their useful life, resulting in a sharp decline in its reliability and availability. In these circumstances, we can offer a full overhaul and refurbishment program for your power electronics, from engineering analyses, tests, and measurements through to delivery and validation of refurbished equipment.

For larger projects such as fleet-wide refits, we can work within a consortium of specialist international companies to ensure that you have the right skills on hand to deliver turnkey solutions to your requirements. This may include system analysis, project management, risk assessment, and safety cases.

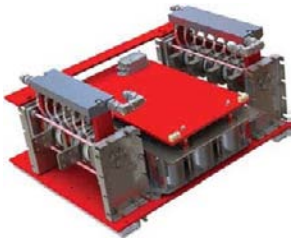

Custom Assemblies—Our Design Philosophy

From concept through development and manufacturing to after sales support, we strongly believe in working closely with our customer every step of the way—extending our philosophy of teamwork beyond our own organization.

We understand that good communication and close collaboration help us provide the very best services to our customers.

Using the latest 3D modeling techniques, we can visualize concepts and check form, fit, and function with virtual prototypes. In addition, by utilizing advanced software packages, we can carry out simulation modeling to model pressure drops through coolers/manifolds and heat flows through heatsinks.

Whether finding solutions to complex engineering problems or simply manufacturing to your designs, you will find the Power Electronic Stacks Group offers outstanding value for money, excellent quality, and first-class customer service.

By working closely together from the very start of our projects, we aim to provide the best solutions on time and within budget.

Silicon Assemblies

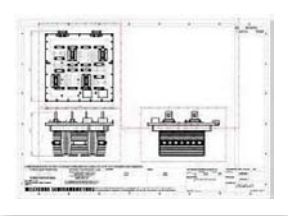

A wide range of units is is available, incorporating international-standard outline silicon semiconductors. Our products have gained a global reputation for quality in military, industrial, and domestic applications.

Standard extruded aluminum heatsink profiles are used for mounting discrete semiconductor devices in various configurations, for example:

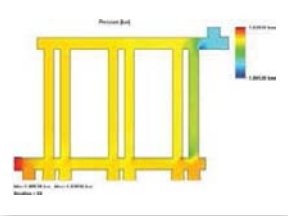

• Single-phase diode bridges with current ratings	from	70	to	5710	Amps DC
• Single-phase half or fully controlled bridges	from	35	to	2200	Amps DC
• Three-phase diode bridges with current ratings	from	100	to	7190	Amps DC
• Three-phase half or fully controlled bridges	from	45	to	3790	Amps DC
• Hexaphase single way diode assemblies	from	200	to	14380	Amps DC
• Hexaphase single way thyristor assemblies	from	90	to	7580	Amps DC
• AC regulators, single and three-phase	from	40	to	2940	Amps RMS

Included in our standard range are solid-state, water-cooled AC regulators for resistance welding, with ratings from 315 to 3020 Amps RMS. Also available are water-cooled, single and three-phase assemblies from 1200 to 6000 Amps RMS. All the above ranges are suitable for 440VRMS, 50Hz mains operation.

Beyond Semiconductors

Our flexible manufacturing facility can readily adapt to our customers' needs. In addition to power semiconductor assembly, we offer complementary sub-assemblies tailored to our customers' requirements, such as fuse panels and capacitor banks. Lastly, we can also contract manufacturers for your designs.

©2023 Littelfuse, Inc

Application and engineering support

Our highly experienced technical team is on hand to provide our customers with firs-class support for everything from the applications of our range of discrete devices to the design and development of complex systems. We can help you from concept through design, to manufacturing and tests, working closely with you every step of the way.

Components

To complement our range of power semiconductors and assemblies, we offer a range of supporting components, including:

- Heatsinks
- Coolers
- Mounting clamps
- Ultra-rapid semiconductor protection fuses
- Capacitors
    - Snubbers
    - Rectification
    - Specialist DC link
- Gate drive units

Westack–Modular Solutions

Assembly Part Number	I_{DC} amps Air Forced 2.5m/s			$I_{FSM\ amps}$	I^2t	Dimensions (mm)				Mass	Device Type and Quantity	Heat Sink Type	
	T_a = 25°C	T_a = 35°C	T_a = 45°C	$I_{TSM\ amps}$	A^2s	Fig.	W	H	D	kg			
Single-Phase Diode Bridges											**Approx. Total Loss 2 × I_{DC} @ 25°C**		
SXB1375B	1375	1303	1230	19500	1.9×10^6	1	382	325	405	20	W2058LC (4)	B(2 × 83.1 × 180)	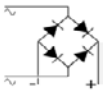
SXB2096B	2096	1987	1874	33000	5.45×10^6	1	382	325	405	20	W3270NC (4)	B(2 × 83.1 × 180)	
SXB3442B	3442	3277	3109	53000	13.5×10^6	2	382	593	405	40	W5696VC (4)	B(2 × 180)	
SXB4264B	4264	4051	3835	72000	22.5×10^6	2	382	593	405	40	W8405ZC (4)	B(2 × 180)	
Three-Phase Diode Bridges											**Approx. Total Loss 2.5 × I_{DC} @ 25°C**		
SXB1920G	1920	1822	1721	19500	1.9×10^6	3	548	325	405	30	W2058LC (6)	B(2 × 83.1 × 180)	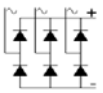
SXB2939G	2939	2788	2634	33000	5.45×10^6	3	548	325	405	30	W3270NC (6)	B(2 × 83.1 × 180)	
SXB4869G	4869	4640	4407	53000	13.5×10^6	4	548	593	405	60	W5696VC (6)	B(2 × 180)	
SXB5993G	5993	5701	5402	72000	22.5×10^6	4	548	593	405	60	W8405ZC (6)	B(2 × 180)	
Six-Phase Diode. Single Way With IPT											**Approx. Total Loss 1.25 × I_{DC} @ 25°C**		
SXB3840HEX	3840	3644	3442	19500	1.9×10^6	5	548	325	395	30	W2058LC (6)	B(2 × 83.1 × 180)	
SXB5877HEX	5877	5576	5268	33000	5.45×10^6	5	548	325	395	30	W3270NC (6)	B(2 × 83.1 × 180)	
SXB9737HEX	9737	9281	8813	53000	13.5×10^6	6	548	593	395	60	W5696VC (6)	B(2 × 180)	
SXB11987HEX	11987	11401	10804	72000	22.5×10^6	6	548	593	395	60	W8405ZC (6)	B(2 × 180)	
Six-Phase Thyristor. Single Way With IPT											**Approx. Total Loss 1.5 × I_{DC} @ 25°C**		
SXB3529HEXT	3529	3244	2949	29600	4.38×10^6	5	548	325	395	30	N1802LC (6)	B(2 × 83.1 × 180)	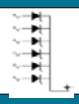
SXB4649HEXT	4649	4270	3878	37000	6.85×10^6	6	548	593	395	60	N2500VC (6)	B(2 × 180)	
SXB6240HEXT	6240	5714	5173	64000	20.5×10^6	6	548	593	395	60	N4085ZC (6)	B(2 × 180)	
Single-Phase Fully Controlled Bridges											**Approx. Total Loss 2.5 × I_{DC} @ 25°C**		
SXB1265FB	1265	1161	1054	29600	4.38×10^6	1	382	325	405	20	N1802NC (4)	B(2 × 83.1 × 180)	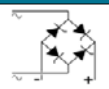
SXB1645FB	1645	1508	1367	37000	6.85×10^6	2	382	593	405	40	N2500VC (4)	B(2 × 180)	
SXB2167FB	2167	1981	1790	64000	20.5×10^6	2	382	593	405	40	N4085ZC (4)	B(2 × 180)	
Three-Phase Fully Controlled Bridges											**Approx. Total Loss 3 × I_{DC} @ 25°C**		
SXB1764FG	1764	1622	1475	29600	4.38×10^6	3	548	325	405	30	N1802NC (6)	B(2 × 83.1 × 180)	
SXB2324FG	2324	2135	1939	37000	6.85×10^6	4	548	593	405	60	N2500VC (6)	B(2 × 180)	
SXB3120FG	3120	2857	2586	64000	20.5×10^6	4	548	593	405	60	N4085ZC (6)	B(2 × 180)	

Westack–Modular Solutions

Cooling for each module section is provided using a low noise 115/230 V AC fan that is protected against overloading by an integral thermal cut-out.

Surge suppression and fusing provide reliable and safe operation. Surge suppression (which protects devices from voltage transients) and high-speed fuses (which protect against against short circuits) are available. Contact IXYS UK for details.

All plastic components are UL-recognized and meet the requirements of the European Union Directive 2002/95/EC covering the restricted use of certain hazardous substances in electrical and electronic equipment.

ISO 9000 provides the standard against which all our products and services are measured.

Westack—Modular Solutions are available in six standard configurations; others by request.

Figure 1
Weight 20 kg

Figure 2
Weight 40 kg

Figure 3
Weight 20 kg

Figure 4
Weight 60 kg

Figure 5
Weight 30 kg

Figure 6
Weight 60 kg

©2023 Littelfuse, Inc

WestackLITE–Modular Solutions

A simple but highly efficient range of stacks incorporating the WESPACK range of phase control thyristors.

Currently available in three standard configurations:

- AC voltage regulators
- Single-phase bridges
- Three-phase bridges

These stacks can easily be modified to meet individual customer requirements. Fully dimensioned drawings are available upon request from the Chippenham Factory.

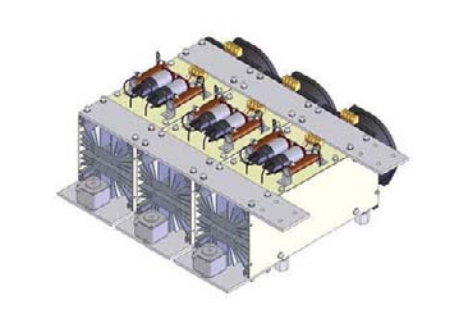

Features and Benefits

WESPACK devices provide a maximum power rating for weight and volume without compromising on quality and reliability.

Cooling is provided by means of a low-noise, dual-voltage (230V/115V) AC fan that is protected against overloading by an integral thermal cut-out.

Surge suppression and fusing can be added to protect the devices from voltage transients and short circuits.

ISO 9000 2000 provides the standard against which all our products and services are measured.

Figure 1
Weight 10 kg

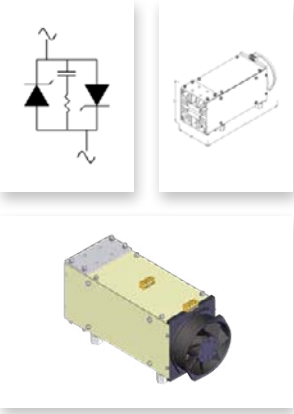

Figure 2
Weight 20 kg

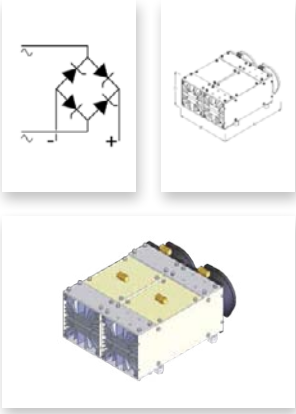

Figure 3
Weight 30 kg

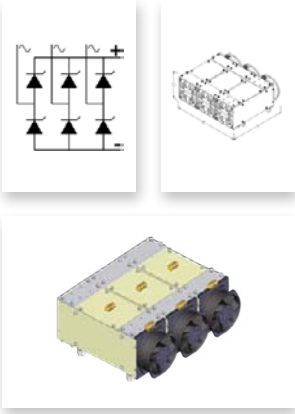

WestackLITE–Modular Solutions

Assembly Part Number	I_{DC} amps Air Forced 2.5m/s			$I_{FSM\ amps}$	I^2t	Dimensions (mm)				Mass	Device Type and Quantity	Heat Sink Type	
	T_a = 25°C	T_a = 35°C	T_a = 45°C	$I_{TSM\ amps}$	A^2s	Fig.	W	H	D	kg			
AC Regulators										**Approx. Total Loss 1.3·I_{RMS}**			
SXC1195FR	1195	1098	997	19100	1.82×10^6	1	168	415	212	10	N1806QK (2)	(2 × 150. 1 × 330)	
SXC1464FR	1464	1348	1227	32400	5.25×10^6	1	168	415	212	10	N2367MK (2)	(2 × 150. 1 × 330)	
SXC1788FR	1788	1636	1480	50900	12.95×10^6	1	168	415	212	10	N3904HK (2)	(2 × 150. 1 × 330)	
Single Phase Fully Controlled Bridges										**Approx. Total Loss 2.5 × I_{DC}**			
SXC1076FB	1076	988	897	19100	1.82×10^6	2	330	415	212	20	N1806QK (4)	(2 × 150. 1 × 330)	
SXC1318FB	1318	1213	1104	32400	5.25×10^6	2	330	415	212	20	N2367MK (4)	(2 × 150. 1 × 330)	
SXC1609FB	1609	1473	1332	50900	12.95×10^6	2	330	415	212	20	N3904HK (4)	(2 × 150. 1 × 330)	
Three Phase Fully Controlled Bridges										**Approx. Total Loss 3 × I_{DC}**			
SXC1517FG	1517	1396	1270	19100	1.82×10^6	3	492	415	212	30	N1806QK (6)	(2 × 150. 1 × 330)	
SXC1871FG	1871	1725	1573	32400	5.25×10^6	3	492	415	212	30	N2367MK (6)	(2 × 150. 1 × 330)	
SXC2319FG	2319	2125	1926	50900	12.95×10^6	3	492	415	212	30	N3904HK (6)	(2 × 150. 1 × 330)	

Power Semiconductor Accessories

As part of our continuing commitment to meet our customers' demands, we offer a range of products to support our high-power semiconductor devices and our silicon assembly business.

The following pages show a selection of accessories available to our customers, from heatsinks and coolers, to bar or box clamps, to mounting grease:

Part Number	Old Part Number	Accessory
XST1000M08P	PTFE1000M8	M8 PTFE tube × 1 m length insulation
XST1000M10P	PTFE1000M10	M10 PTFE tube × 1 m length insulation
XST1000M12P	PTFE1000M12	M12 PTFE tube × 1 m length insulation
XST1000M16P	PTFE1000M16	M16 PTFE tube × 1 m length insulation
L0001YC600XXX	n/a	30mm diameter electrode Insulator Capsule
L0001QC600XXX	n/a	38mm diameter electrode Insulator Capsule
L0001NC600XXX	n/a	47mm diameter electrode Insulator Capsule
L0001HC600XXX	n/a	66mm diameter electrode Insulator Capsule
L0001ZF600XXX	n/a	73mm diameter electrode Insulator Capsule
L0001TC600XXX	n/a	75mm diameter electrode Insulator Capsule

Part Number	Old Part Number	Accessory	Type
XSL200D8WRC	U9948	200mm long single Co-Axial cable, Red / White, M5 ring terminal for Ø75 IGBT & below	IGBT
XSL200D8WRCP	U9947	200mm long double Co-Axial cable, Red / White, M5 ring terminal for Ø85 IGBT & above	IGBT
XSL220C2WRT	–	220mm long twisted pair, Silicone sleeve cable 16/0,2, Red / White, M4 ring terminal	Thyristor
XSL300C2WRP	U9900	300mm long pair, Silicone sleeve cable 16/0,2, Red / White, M4 ring terminal	Thyristor
XSL300C2WS	U9900 (Gate Only)	300mm long gate wire, Silicone sleeve cable 16/0,2, White, M4 ring terminal	Thyristor
XSL350C2WRP	U9723	350mm long pair, Silicone sleeve cable 16/0,2, Red / White, M4 ring terminal	Thyristor
XSL400C2WRP	U9860	400mm long pair, Silicone sleeve cable 16/0,2, Red / White, M4 ring terminal	Thyristor
XSL500C2WRP	U9855	500mm long pair, Silicone sleeve cable 16/0,2, Red / White, M4 ring terminal	Thyristor
XSL600C2WRP	U9775	600mm long pair, Silicone sleeve cable 16/0,2, Red / White, M4 ring terminal	Thyristor
XSL1000C2WRP	U9734/U9801/U9849	1000mm long pair, Silicone sleeve cable 16/0,2, Red / White, M4 ring terminal	Thyristor
XSL1000C2WRT	U9952	1000mm long twisted pair, Silicone sleeve cable 16/0,2, Red / White, M4 ring terminal	Thyristor
XSL1100C2WRT	U9779	1100mm long twisted pair, Silicone sleeve cable 16/0,2, Red / White, M4 ring terminal	Thyristor

©2023 Littelfuse, Inc

WC 18

WC 45

WC 48/49

WC 50

Standard Bar Clamps

Part Number	Fixing Centers	Rod Size	Outline	Mounting Surface Diameter	Nominal Thickness	$T_{J\ Max.}$	Outline No.
	mm			mm	mm	°C	
XK0450DA056M	65	M8	DO-200AA/TO-200AB	19.0	13.8	190	WC2
XK0450DT056M	65	M8	DO-200AA/TO-200AB	19.0	13.8	190	WC3
XK0450SA056M	65	M8	DO-200AA/TO-200AB	19.0	13.8	190	WC1
XK0550DA056M	65	M8	GTO	29.5	16	190	WC5
XK0550SA056M	65	M8	GTO	29.5	16	190	WC4
XK0900DA056M	65	M8	Diode/Thyristor	25.1	14.6	190	WC7
XK0900DT056M	65	M8	Diode/Thyristor	25.1	14.6	190	WC8
XK0900SA056M	65	M8	Diode/Thyristor	25.1	14.6	190	WC6
XK0600DA074M	89	M10	Press-Pack IGBTs	47.0	27	190	WC10
XK0600SA074M	89	M10	Press-Pack IGBTs	47.0	27	190	WC9
XK1000DA074M	89	M10	Press-Pack IGBTs	47.0	27	190	WC12
XK1000SA074M	89	M10	Press-Pack IGBTs	47.0	27	190	WC11
XK1100DA076M	89	M10	DO-200AB/TO-200AC	34.0	26.2	190	WC13
XK1130DA076M	89	M10	DO-200AB/TO-200AC	34.0	26.2	190	WC15
XK1130DT076M	89	M10	DO-200AB/TO-200AC	34.0	26.2	190	WC16
XK1130SA076M	89	M10	DO-200AB/TO-200AC	34.0	26.2	190	WC14
XK1800DA076M	89	M10	Wespack PCT	38.0	14	190	WC18
XK1800DT076M	89	M10	Wespack PCT	38.0	14	190	WC19
XK1800SA076M	89	M10	Wespack PCT	38.0	14	190	WC17
XK2100DA076M	89	M10	GTO	47.0	27	190	WC21
XK2100DA076ML	89	M10	GTO	47.0	27	125	WC21
XK2100SA076M	89	M10	GTO	47.0	27	190	WC20
XK2100SA076ML	89	M10	GTO	47.0	27	125	WC20
XK2140DA076M	89	M10	DO-200/Thyristor	47.0	26.8	190	WC23
XK2140DA076ML	89	M10	DO-200/Thyristor	47.0	26.8	125	WC23
XK2140DT076M	89	M10	DO-200/Thyristor	47.0	26.8	190	WC24
XK2140DT076ML	89	M10	DO-200/Thyristor	47.0	26.8	125	WC24
XK2140SA076M	89	M10	DO-200/Thyristor	47.0	26.8	190	WC22
XK2140SA076ML	89	M10	DO-200/Thyristor	47.0	26.8	125	WC22
XK2700DA076M	89	M10	Wespack PCT	50.0	14	190	WC26
XK2700DT076M	89	M10	Wespack PCT	50.0	14	190	WC27
XK2700SA076M	89	M10	Wespack PCT	50.0	14	190	WC25

Standard Bar Clamps

Part Number	Fixing Centers mm	Rod Size	Outline	Mounting Surface Diameter mm	Nominal Thickness mm	$T_{J\ Max.}$ °C	Outline No.
XK2000DA114M	132	M12	Press-Pack IGBTs	75.0	26	190	WC29
XK2000SA114M	132	M12	Press-Pack IGBTs	75.0	26	190	WC28
XK2500DA114M	132	M12	Press-Pack IGBTs	75.0	26	190	WC31
XK2500SA114M	132	M12	Press-Pack IGBTs	75.0	26	190	WC30
XK2500DA116M	132	M12	GTO	63.0	26	190	WC33
XK2500DA116ML	132	M12	GTO	63.0	26	125	WC33
XK2500SA116M	132	M12	GTO	63.0	26	190	WC32
XK2500SA116ML	132	M12	GTO	63.0	26	125	WC32
XK3000DA116M	132	M12	DO-200AD/Thyristor	63.0	33	190	WC35
XK3000DA116ML	132	M12	DO-200AD/Thyristor	63.0	33	125	WC35
XK3000SA116M	132	M12	DO-200AD/Thyristor	63.0	33	190	WC34
XK3000SA116ML	132	M12	DO-200AD/Thyristor	63.0	33	125	WC34
XK3500DA116M	132	M12	GTO	75.0	26	190	WC37
XK3500DA116ML	132	M12	GTO	75.0	26	125	WC37
XK3500SA116M	132	M12	GTO	75.0	26	190	WC36
XK3500SA116ML	132	M12	GTO	75.0	26	125	WC36
XK4000DA116M	132	M12	Diode/Thyristor	73.0	36.8	190	WC39
XK4000DA116ML	132	M12	Diode/Thyristor	73.0	36.8	125	WC39
XK4000SA116M	132	M12	Diode/Thyristor	73.0	36.8	190	WC38
XK4000SA116ML	132	M12	Diode/Thyristor	73.0	36.8	125	WC38
XK5000DA128M	146	M16	GTO	75.0	26	190	WC40
XK5000DA128ML	146	M16	GTO	75.0	26	125	WC40
XK7000DA128M	146	M16	Diode/Thyristor	75.0	26.6	190	WC41
XK7000DA128ML	146	M16	Diode/Thyristor	75.0	26.6	125	WC41
XK3060DA140ML	154	M12	Press-Pack IGBTs	85.1	26	125	WC43
XK3060SA140ML	154	M12	Press-Pack IGBTs	85.1	26	125	WC42
XK9000SA160M	180	M16	Thyristor	99.3	35.8	190	WC44
XK9000SA160ML	180	M16	Thyristor	99.3	35.8	125	WC44
XK9000DA160M	180	M16	Thyristor	99.3	35.8	190	WC45
XK9000DA160ML	180	M16	Thyristor	99.3	35.8	125	WC45
XK6120DA180ML	196	M16	Press-Pack IGBTs	125.0	26	125	WC46
XK6120SA180ML	196	M16	Press-Pack IGBTs	125.0	26	125	WC47
XK8000DA180ML	196	M16	Press-Pack IGBTs	132.0	26	125	WC67
XK8000SA180ML	196	M16	Press-Pack IGBTs	132.0	26	125	WC68

Standard Bar Clamp Kits

for rectifier diodes & phase control thyristors

These single-side cooled square base mounting clamps are suitable for 34 mm to 50 mm diameter electrode devices with clamping forces that range from 1130 Kgf to 2140 Kgf. They are suitable for devices with blocking voltages from 400 volts up to 6 KV.

Part Number	Electrode Diameter	Outline
XK1500CB034M	34-38	WC64
XK1130SB076M	34-38	WC65
XK2140SB076M	47-50	WC66

Standard part replacements for the obsolete flat-base power silicon diodes types KBN/R, KCN/R, and KDN/R.
For other voltages and thyristor options, please consult the factory.

©2023 Littelfuse, Inc

WC 58

WC 60

WC 62

WC 59

WC 61

WC 63

Standard Bar Clamps

Range	Part Number	#### = Force	Max cell dia.	T_{JMAX}	xxx = max Z - dim range	Outline No.
		kgf	mm	°C	mm	
XSK042	XSK####DA042xxx	0500/0900	42	190	025-076*	WC58
	XSK####DT042xxx	0500/0900	42	190	025-076*	WC59
	XSK####DF042xxx	0500/0900	42	190	025-076*	WC60
XSK054	XSK####DA054xxx	900	54	190	025-076*	WC58
	XSK####DT054xxx	900	54	190	025-076*	WC59
	XSK####DF054xxx	900	54	190	025-076*	WC60
XSK056	XSK####DA056xxx	0500/0900	56	190	038-120*	WC58
	XSK####DT056xxx	0500/0900	56	190	038-120*	WC59
	XSK####DF056xxx	0500/0900	56	190	038-120*	WC60
	XSK####DA056xxx	1500	56	190	038-120*	WC58/SP
	XSK####DT056xxx	1500	56	190	038-120*	WC59/SP
	XSK####DF056xxx	1500	56	190	038-120*	WC60/SP
XSK065	XSK####DA065xxx	0500/0900	65	190	038-120*	WC58
	XSK####DT065xxx	0500/0900	65	190	038-120*	WC59
	XSK####DF065xxx	0500/0900	65	190	038-120*	WC60
	XSK####DA065xxx	1500	65	190	038-120*	WC58/SP
	XSK####DT065xxx	1500	65	190	038-120*	WC59/SP
	XSK####DF065xxx	1500	65	190	038-120*	WC60/SP
XSK075	XSK####DA075xxx	0900/1500	75	190	038-120*	WC58
	XSK####DT075xxx	0900/1500	75	190	038-120*	WC59
	XSK####DF075xxx	0900/1500	75	190	038-120*	WC60
	XSK####DA075xxx	2200	75	190	038-120*	WC61
	XSK####DT075xxx	2200	75	190	038-120*	WC62
	XSK####DF075xxx	2200	75	190	038-120*	WC63
XSK087	XSK####DA087xxx	1500/2200	87	190	038-120*	WC61
	XSK####DT087xxx	1500/2200	87	190	038-120*	WC62
	XSK####DF087xxx	1500/2200	87	190	038-120*	WC63
	XSK####DA087xxx	3000	87	190	038-120*	WC61/SP
	XSK####DT087xxx	3000	87	190	038-120*	WC62/SP
	XSK####DF087xxx	3000	87	190	038-120*	WC63/SP
XSK103	XSK####DA103xxx	2200	103	190	038-120*	WC58/SP
	XSK####DF103xxx	2200	103	190	038-120*	WC60/SP
	XSK####DA103xxx	3200	103	190	038-120*	WC61/SP
	XSK####DF103xxx	3200	103	190	038-120*	WC63/SP
	XSK####DA103xxx	4000	103	190	038-120*	WC61/SP
	XSK####DF103xxx	4000	103	190	038-120*	WC63/SP
XSK112	XSK####DA112xxx	2800/3200/3800/4500	112	190	038-120*	WC61/SP
	XSK####DF112xxx	2800/3200/3800/4500	112	190	038-120*	WC63/SP
XSK120	XSK####DA120xxx	3800/4500/5000	120	190	050-120*	WC61/SP
	XSK####DF120xxx	3800/4500/5000	120	190	050-120*	WC63/SP
XSK126	XSK####DA126xxx	3800/4500/5000	126	190	050-120*	WC61/SP
	XSK####DF126xxx	3800/4500/5000	126	190	050-120*	WC63/SP
XSK160	XSK####DA160xxx	8000/9000	160	190	050-120*	WC61/SP
	XSK####DF160xxx	8000/9000	160	190	050-120*	WC63/SP

Stacks and Accessories

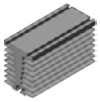
WH1

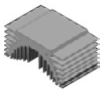
WH5

WC 48/49

WC 52

WC 55

WH2

WH6

WC 50

WC 53

WC 56

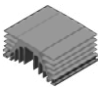
WH3

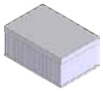
WH7

WC51

WC 54

WC 57

WH4

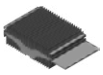
WH8

Bar Clamps

Range	A	A1	B	C	C1	D	E	F	G	H	Fixing
XSK042	69.85	74.89	54.00	15.88	21.04	42.00	8.64	PCF	PCF	12.70	M6
XSK054	82.55	86.04	65.00	15.88	21.04	54.00	8.62	34.93	PCF	12.70	M6
XSK056	95.25	–	70.00	25.40	–	56.00	12.19	PCF	PCF	9.53	M8
XSK065	104.39	–	79.00	25.40	–	65.00	12.19	PCF	PCF	12.70	M8
XSK075	112.78	–	89.00	25.40	–	75.00	12.19	PCF	PCF	12.70	M8
XSK087	127.00	–	102.00	25.40	–	87.00	12.19	PCF	PCF	19.05	M8
XSK103 (2200/3200)	144.78	–	118.00	25.40	36.00	103.00	12.19	PCF	PCF	19.05	M8
XSK103 (4000)	144.78	154.11	118.00	25.40	36.00	103.00	16.56	PCF	PCF	19.05	M10
XSK112	165.02	–	132.00	25.40	36.00	112.00	16.56	PCF	PCF	25.40	M10
XSK120	172.72	–	140.00	25.40	36.00	120.00	16.56	PCF	PCF	25.40	M10
XSK126	181.1	–	146	25.4	36	126	16.56	PCF	PCF	25.4	M10
XSK160	216.07	–	180	38.1	–	160	16.56	PCF	PCF	38.1	M12

Notes:
PCF = Dimension is dependent on clamp force and cell height. Please consult the factory.
"A1" dimension only shown where "A1" is larger than "A".
"C1" dimension only shown where "C1" is larger than "C".
All dimensions in mm.

©2023 Littelfuse, Inc

Bar Clamps for WESPACK™ and GTO range

Part Number	Rod Size & Length	Insulator Size & Length	Fixing Centers	Electrode Diameter	Clamp Forces	"Z"	"D"	Fig. No.
	mm	mm				mm	mm	
XSK1500DA076038	M8 × 90	M8 × 60	89.0	32	10kN to 20kN	38	27.5	WC51
XSK1500DA076076	M8 × 130	M8 × 95	89.0	32	10kN to 20kN	76	62.5	WC51
XSK1500DA076101	M8 × 160	M8 × 120	89.0	32	10kN to 20kN	101	87.6	WC51
XSK2000DA076038	M8 × 95	M8 × 60	89.0	38	13kN to 20kN	38	25.9	WC52
XSK2000DA076076	M8 × 130	M8 × 95	89.0	38	13kN to 20kN	76	61.0	WC52
XSK2000DA076101	M8 × 160	M8 × 120	89.0	38	13kN to 20kN	101	85.9	WC52
XSK3000DA076038	M8 × 100	M8 × 65	89.0	50	25kN to 31kN	38	26.2	WC53
XSK3000DA076076	M8 × 130	M8 × 100	89.0	50	25kN to 31kN	76	56.1	WC53
XSK3000DA076101	M8 × 160	M8 × 125	89.0	50	25kN to 31kN	101	86.1	WC53
XSK3400DA076038	M8 × 100	M8 × 65	89.0	50	27kN to 34kN	38	24.6	WC54
XSK3400DA076076	M8 × 140	M8 × 105	89.0	50	27kN to 34kN	76	64.5	WC54
XSK3400DA076101	M8 × 160	M8 × 130	89.0	50	27kN to 34kN	101	89.7	WC54
XSK3800DA116M076	M10 × 150	M12 × 100	132.0	66	32kN to 38kN	76	59.7	WC55
XSK3800DA116M101	M10 × 180	M12 × 125	132.0	66	32kN to 38kN	101	84.6	WC55
XSK4400DA116M076	M10 × 150	M12 × 105	132.0	68	36kN to 44kN	76	63.0	WC56
XSK4400DA116M101	M10 × 180	M12 × 130	132.0	68	36kN to 44kN	101	87.9	WC56
XSK6000DA116M076	M10 × 150	M12 × 105	132.0	75	50kN to 60kN	76	59.9	WC57
XSK6000DA116M101	M10 × 180	M12 × 130	132.0	75	50kN to 60kN	101	84.8	WC57

Notes: 1 kgf = 9.8 Newtons T_{JMAX} = 190 °C

Box Clamps

Part Number	Moulded Box Style	Fixing Centers	Rod Size	Capsule Device			Outline Ref.
				Outline	Mounting Surface Ø	Norminal Thickness	
					mm	mm	
XK0450BA019M	Injection	50 PCD	M5x50 Bolts	W1 / W8 / W90	19.0	13.8	WC48
XK0450BB019M	Compression	50 PCD	M5x50 Bolts	W1 / W8 / W90	19.0	13.8	WC48
XK0450BA025M	Injection	50 PCD	M5x50 Bolts	W2 / W58	25.1	14.6	WC49
XK0450BB025M	Compression	50 PCD	M5x50 Bolts	W2 / W58	25.1	14.6	WC49
XK1000BA025M	Injection	50 PCD	M5x50 Bolts	W91	25.1	14.0	WC49
XK1500BA034M	Injection	70 PCD	M6x50 Bolts	W4 / W10 / W92	34.0	26.2	WC50

Heatsinks

Part Number	Weight	Periphery	Area	Fig.
	kg/m	mm	mm²	
XSFGxxxxAN	8.1	1059	2979	WH1
XSFGAxxxxAN	15.6	1682	5867	WH2
XSFHxxxxAN	12.7	1684	4655	WH3
XSFTxxxxAN	20	2065	7573	WH4
XSFTBxxxxAN	29	2467	10905	WH5
XSFTCxxxxAN	28	2544	10561	WH6
XSFLPxxxxAN	30	6620	11172	WH7
XSF46xxxxAN	20	2822	7411	WH8
XSF30xxxxAN	Dimensions 125 mm × 125 mm × 4 vanes			

WCL1

WCL5

WCL11

WCL12-WS71-1

WCL2

WCL6

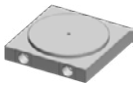
WCL16

WCL13-WS71-2

WCL3

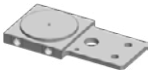
WCL7

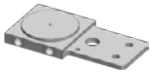
WCL17

WCL14-WS72-1

WCL4

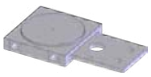
WCL10

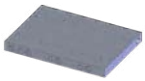
WCL9-WS65

WCL15-WS72-2

Coolers

Part Number	Weight	Cooler Thickness	Busbar Thickness	Description	Fig. No.
	kg	mm	mm		
XW076NC16A	0.418	16	N/A	47 mm WC Cu	WCL2
XW076NC16B	0.612	16	6,4	47 mm WC Cu with Busbar (10 mm Hose)	WCL1
XW076NC16BS	0.612	16	6,4	47 mm WC Cu with Busbar + spirol pins fitted (10 mm Hose)	WCL1
XW076NC16BT	0.612	16	6,4	47 mm WC Cu with Busbar + thermostat hole (10 mm Hose)	WCL1
XW076NC16C	0.612	16	6,4	47 mm WC Cu with Busbar (½" Hose)	WCL1
XW076NC16CT	0.612	16	6,4	47 mm WC Cu with Busbar + thermostat hole (½" Hose)	WCL1
XW076NC16R	0.581	16	6,35	47 mm WC Cu reversed with Busbar	WCL12
XW076NC16W	0.400	16	N/A	47 mm WC Cu reversed	WCL13
XW116ZC20A	1.300	20	N/A	73 mm WC Cu	WCL4
XW116ZC20B	1.750	20	10	73 mm WC Cu with Busbar	WCL3
XW116ZC20C	2.120	20	10	73 mm WC Cu with alt, Busbar	WCL5
XW116ZC20R	1.672	20	10	73 mm WC Cu reversed with Busbar	WCL14
XW116ZC20W	1.119	20	N/A	73 mm WC Cu reversed	WCL15
XW127EC25A	1.650	25	N/A	85 mm WC Cu Helix	WCL16
XW127EC25B	2.200	25	8	85 mm WC Cu with Busbar Helix	WCL17
XW127EA25A	0.500	25	N/A	85 mm WC Al Helix	WCL16
XW127EA25B	0.650	25	8	85 mm WC Al with Busbar Helix	WCL17
XW160FC25A	3.620	25	N/A	100 mm WC Cu	WCL6
XW160FC25B	4.520	25	10	100 mm WC Cu with Busbar	WCL7
XW180GC34A	4.920	34	N/A	125 mm WC Cu Helix	WCL11
XW180GC34B	5.950	34	10	125 mm WC Cu with Busbar Helix	WCL10
XW180GA34A	1.500	34	N/A	125 mm WC Al Helix	WCL11
XW180GA34B	1.800	34	10	125 mm WC Al with Busbar Helix	WCL10
XW180BA34E	1.550	34	N/A	132 mm WC Al Helix	WCL19
XW180BA34F	1.850	34	10	132 mm WC Al with Busbar Helix	WCL20
XW270QA25A	2.941	25	N/A	270 × 190 mm WC Al Cold Plate	WCL9

Part Number	Cooler Accessories
XSNM12H10S	M12 Cooler Connection, 10mm Hose & Stainless Steel material
XSNM12H12S	M12 Cooler Connection, 12mm Hose & Stainless Steel material

©2023 Littelfuse, Inc

Outline Drawings

W1 - 100A241

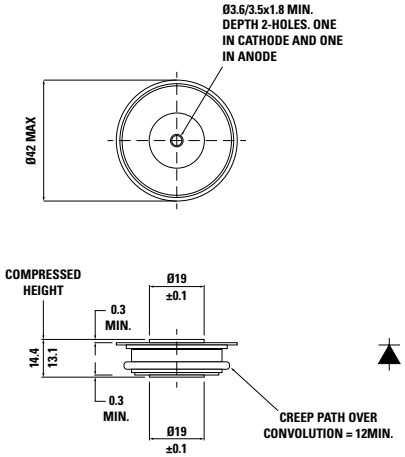

W2 - 100A291

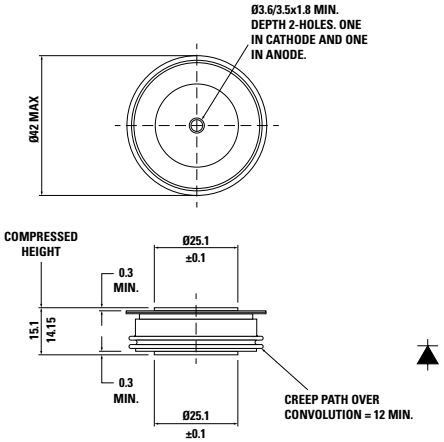

W3 - 100A317

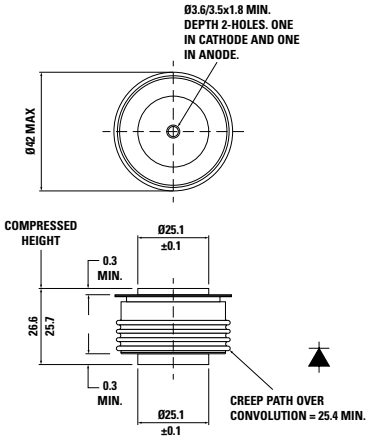

W4 - 100A243

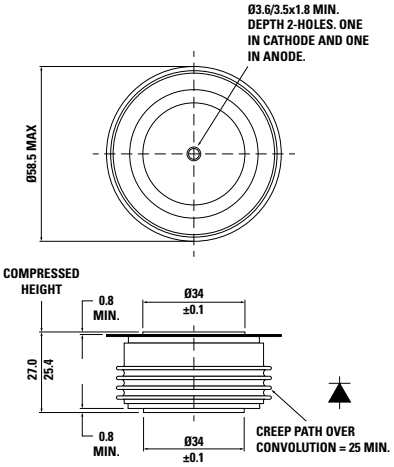

W5 - 100A249

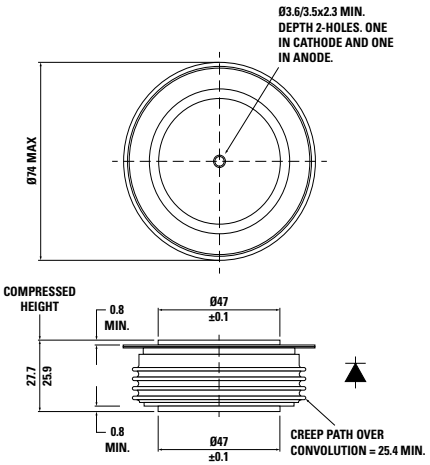

W6 - 100A270

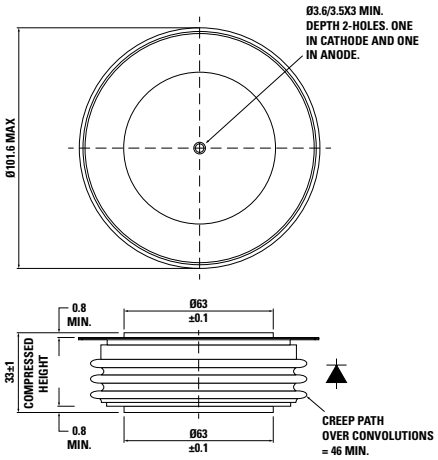

W7 - 100A293

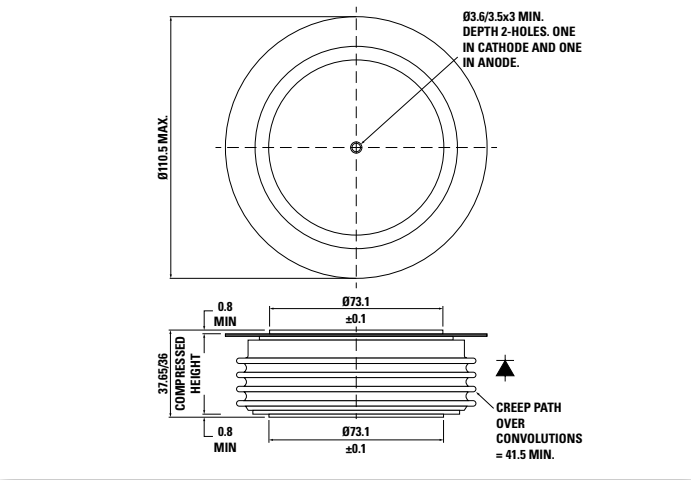

W8 - 101A212

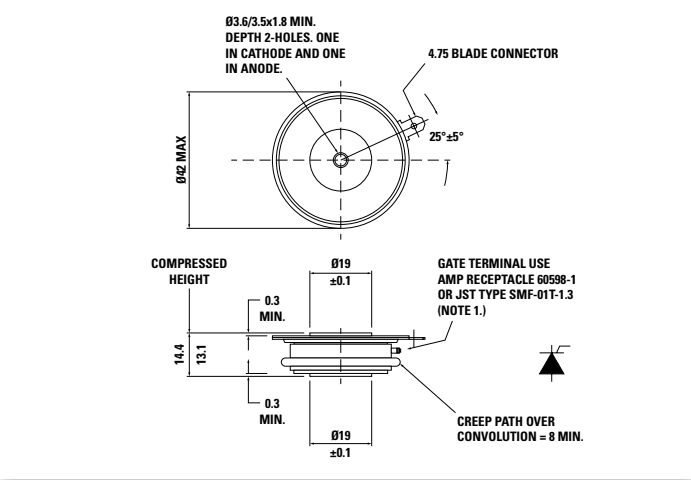

W10 - 101A216

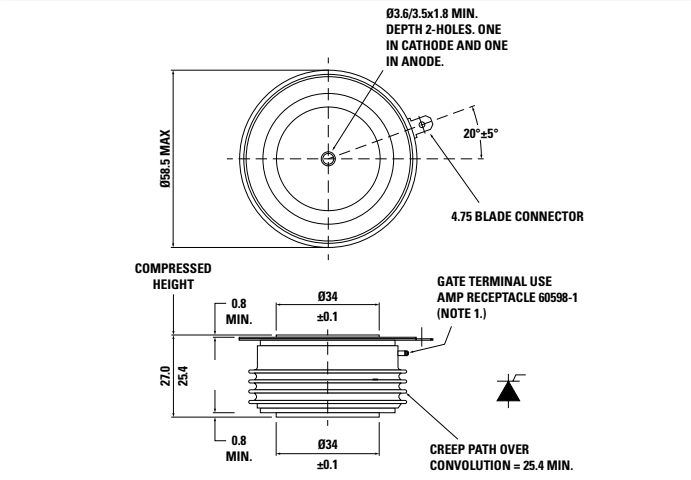

W11 - 101A223

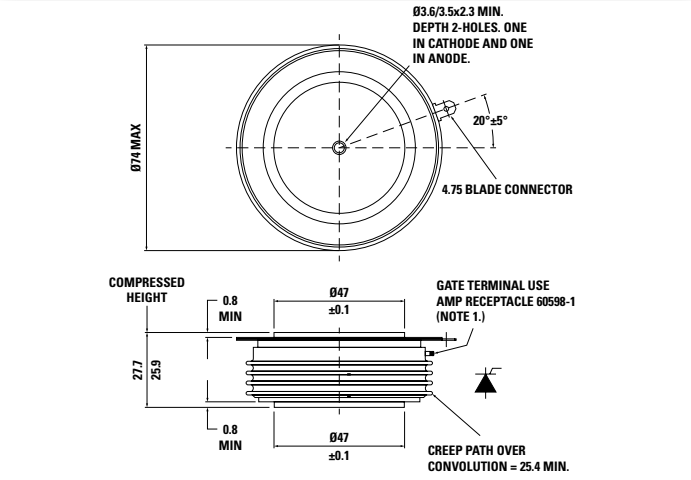

W12 - 101A232

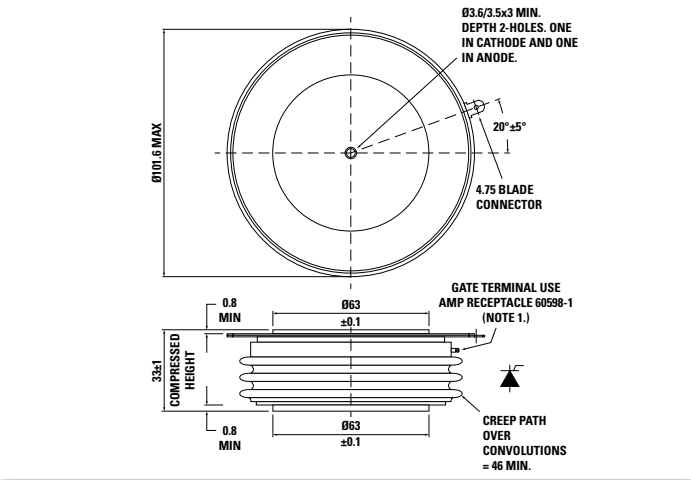

W13 - 101A281

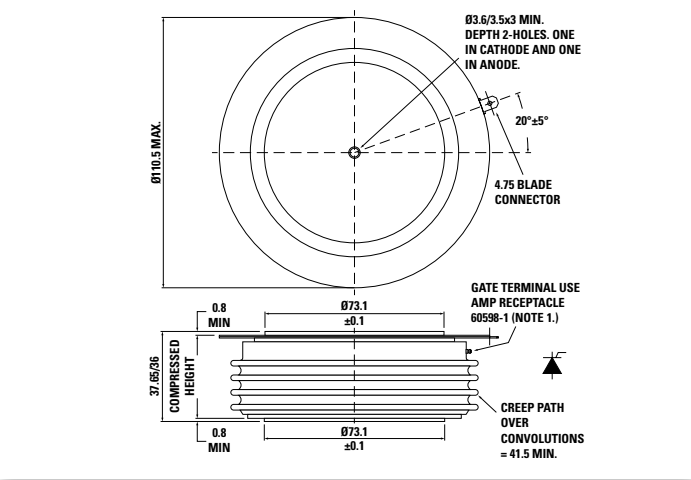

©2023 Littelfuse, Inc

W16 - 101A235

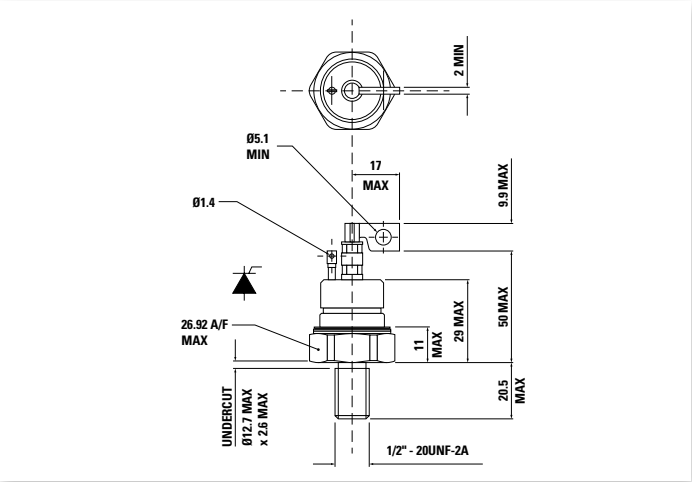

W17 - 101A231

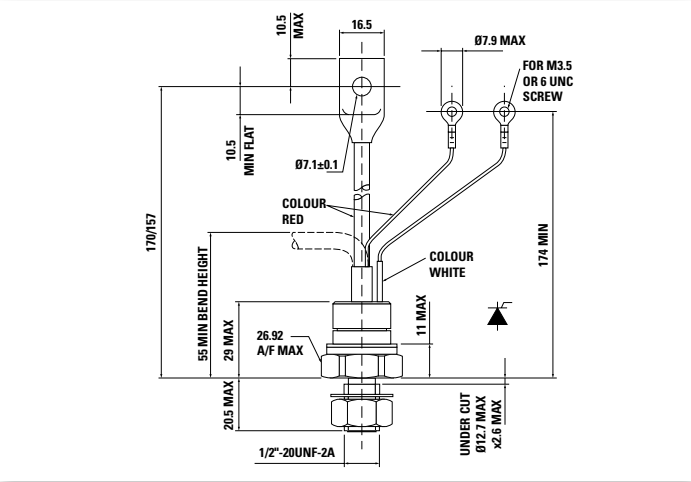

W18 - 101A225

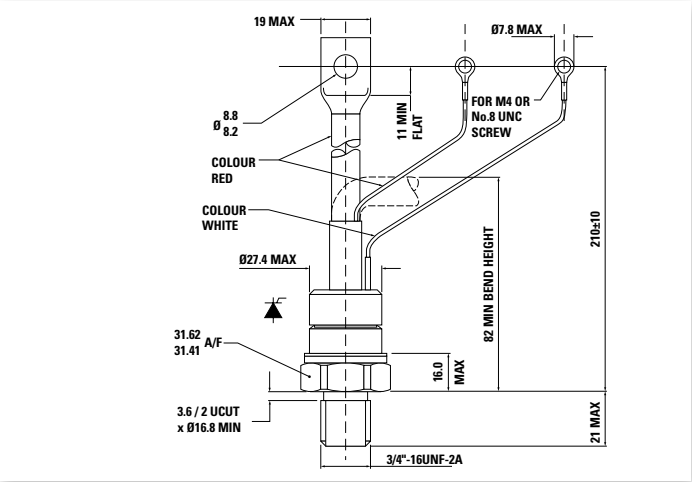

W20 - 100A303

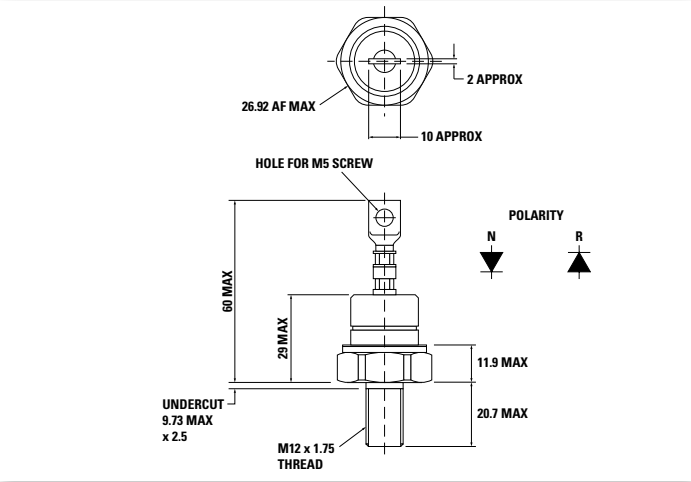

W21 - 100A294

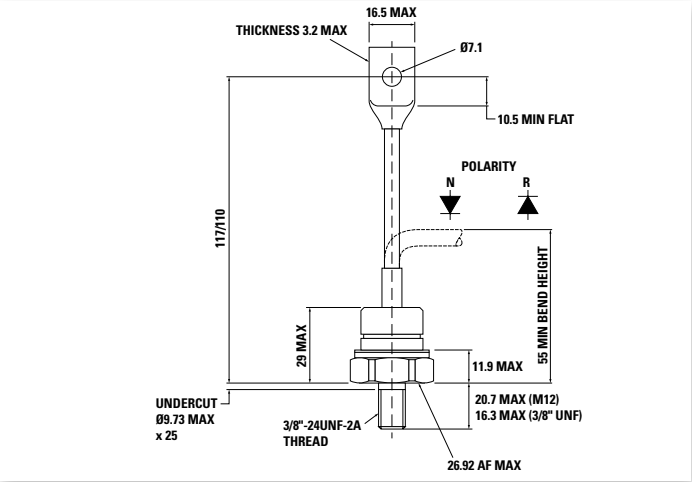

W22 - 100A297

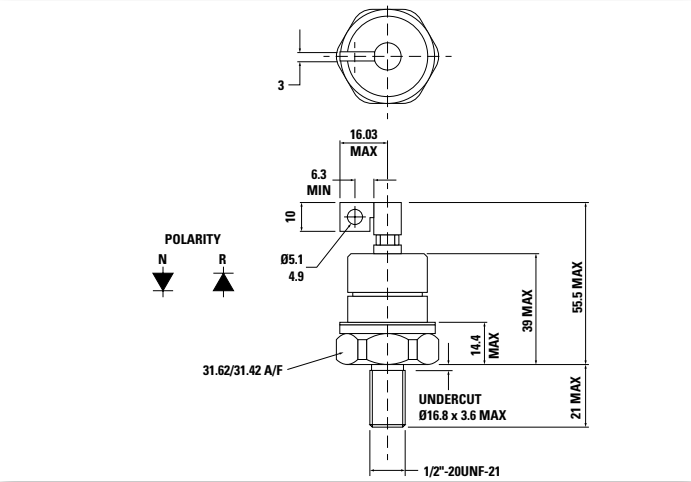

Outline Drawings

W23 - 100A281

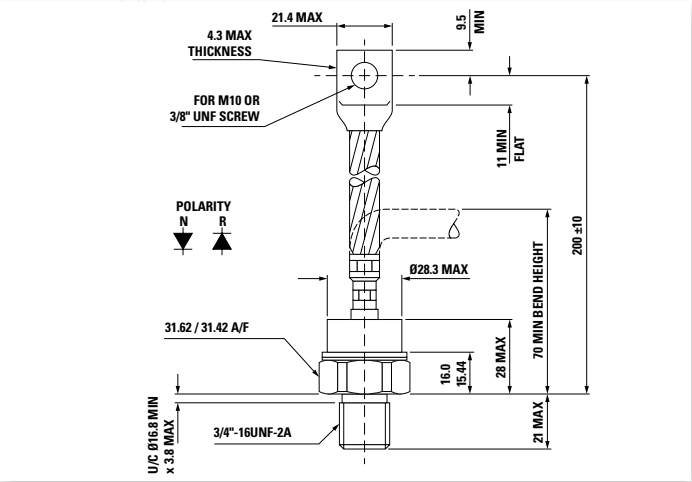

W24 - 100A280

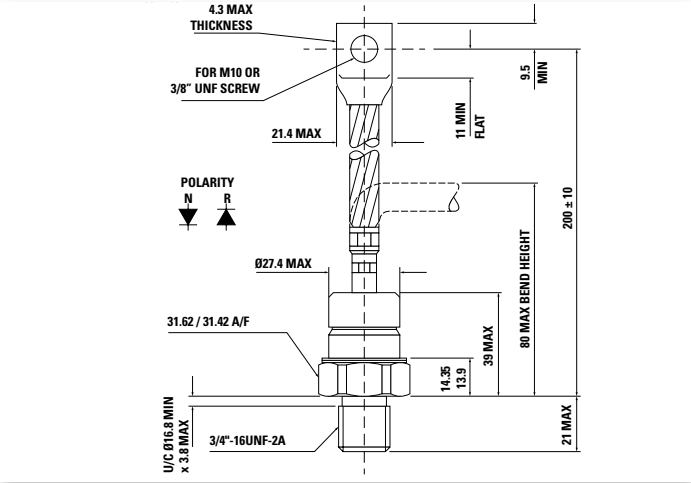

W33 - 101A346

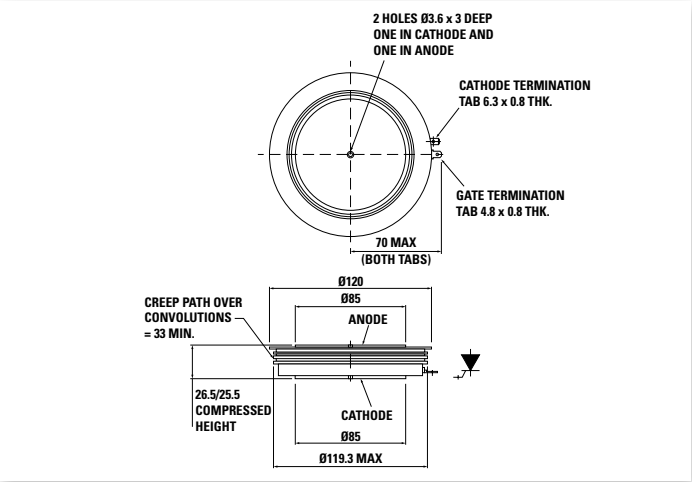

W34 - 101A287

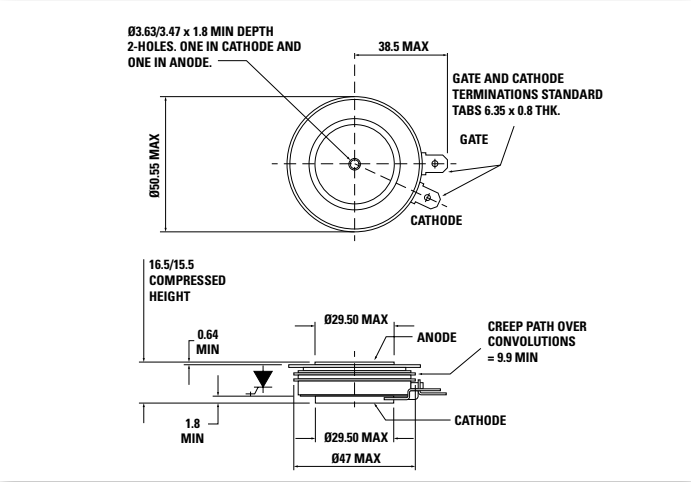

W35 - 101A358

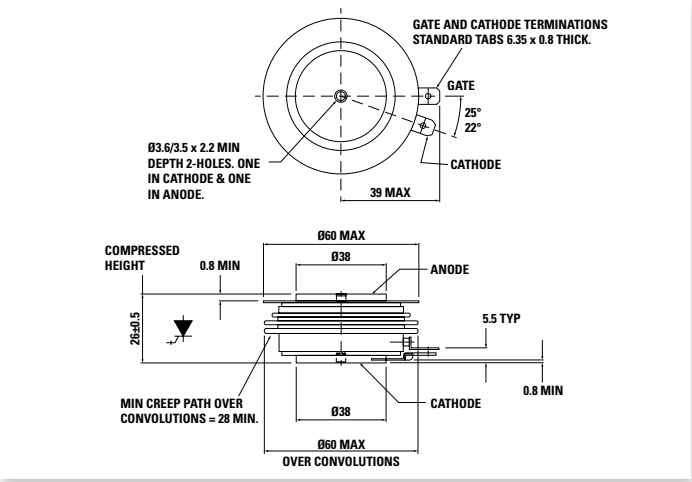

W36 - 101A288

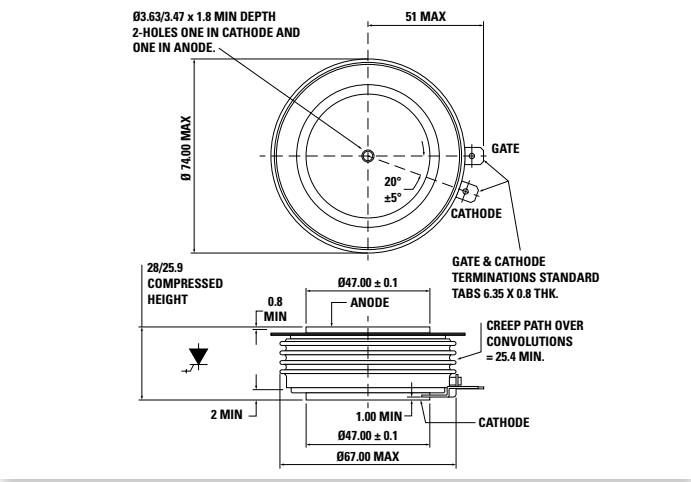

©2023 Littelfuse, Inc

W37 - 100A325

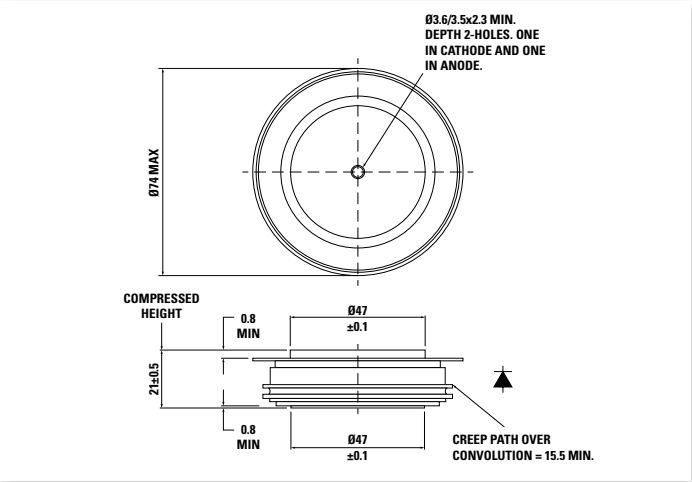

W39 - 100A338

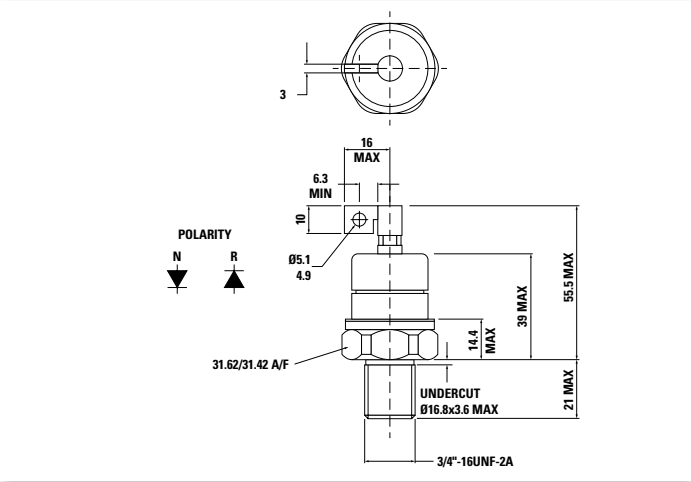

W40 - 171A107

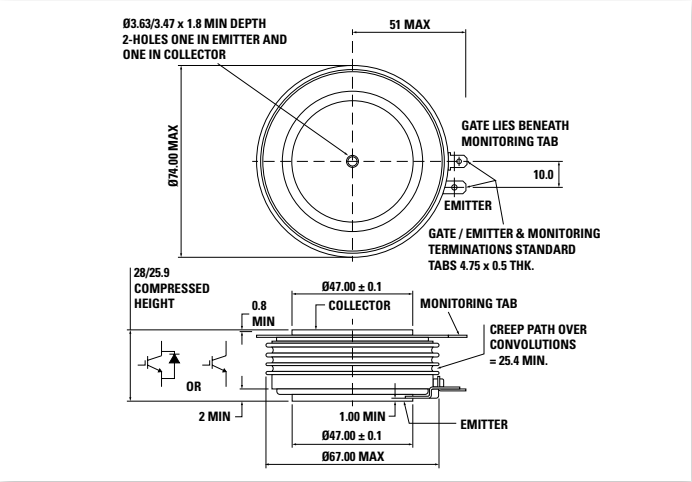

W41 - 171A108

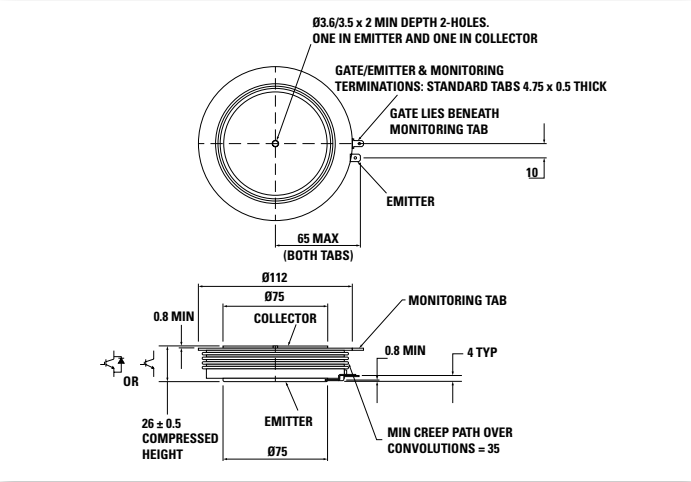

W42- 100A310

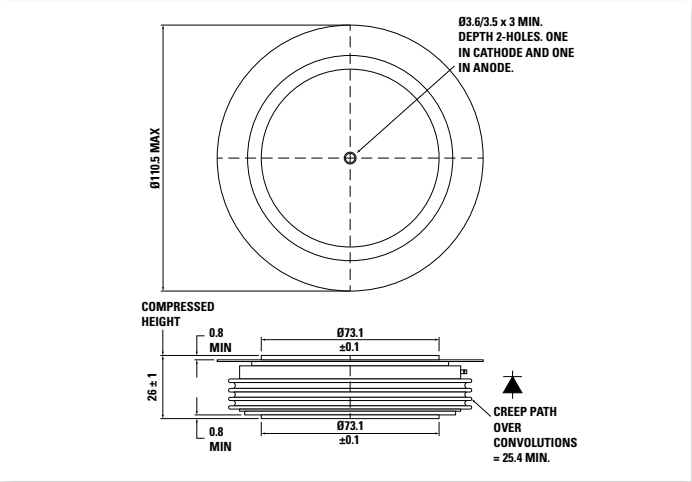

W43 - 100A320

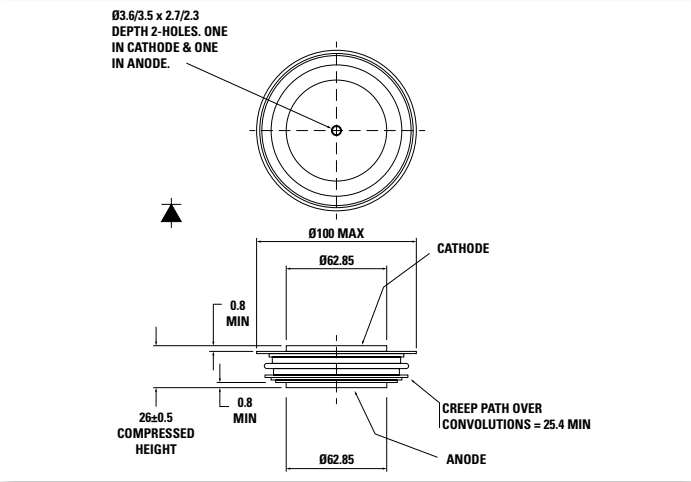

W44 - 101A340

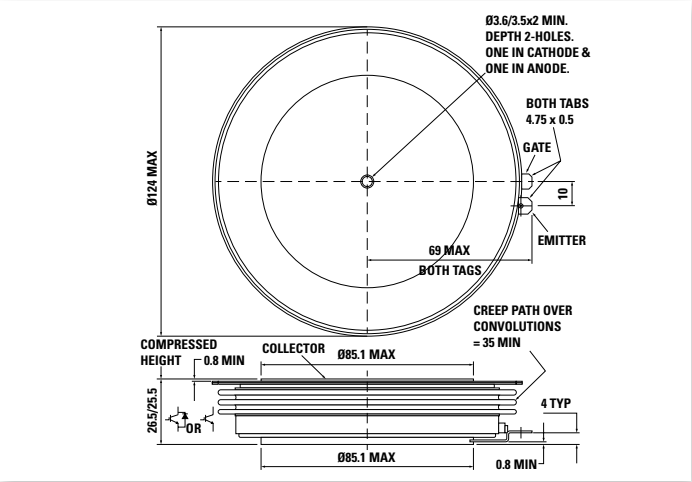

W45 - 101A359

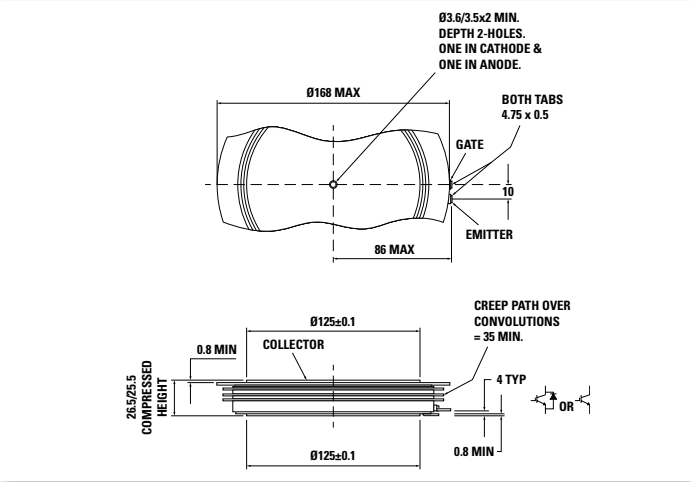

W46 - 101A305

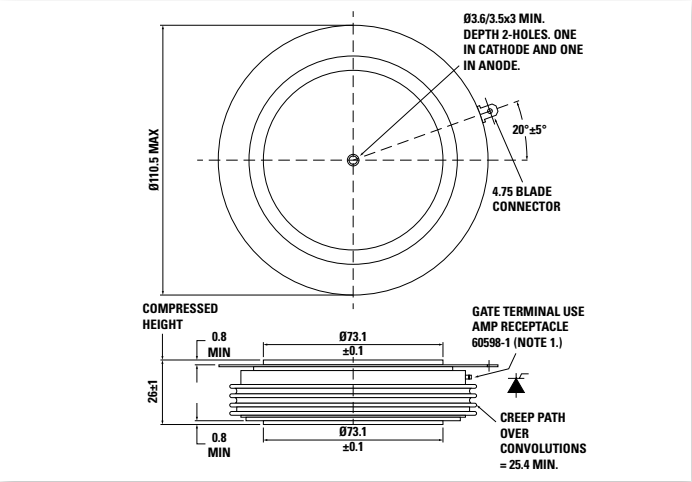

W47 - 100A322

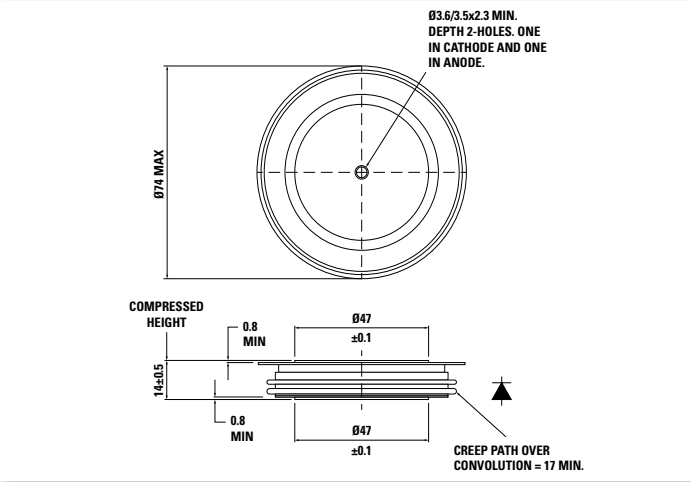

W48 - 101A347

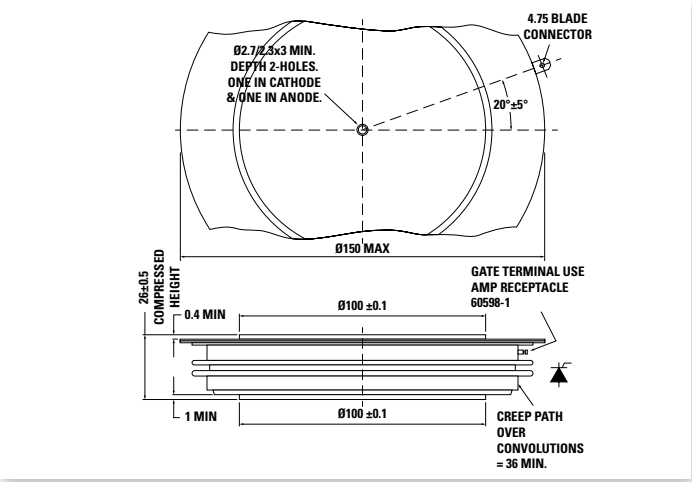

W51 - 101A334

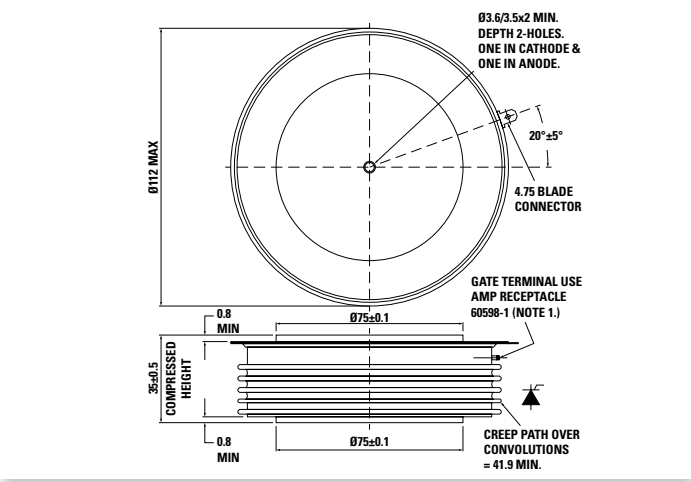

©2023 Littelfuse, Inc

W52 - 100A328

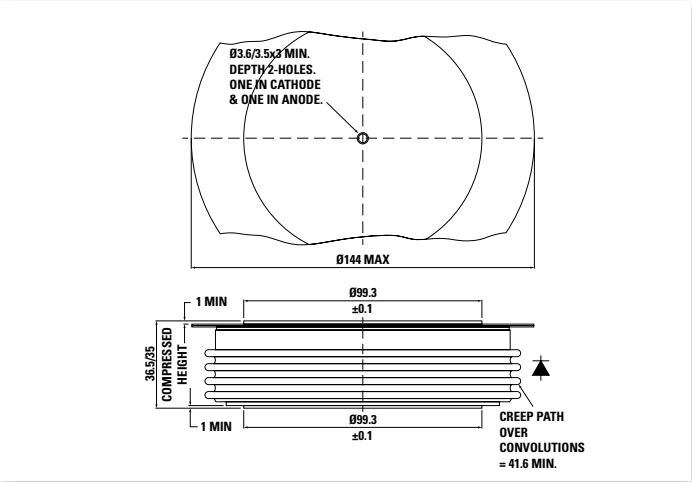

W54 - 100A353

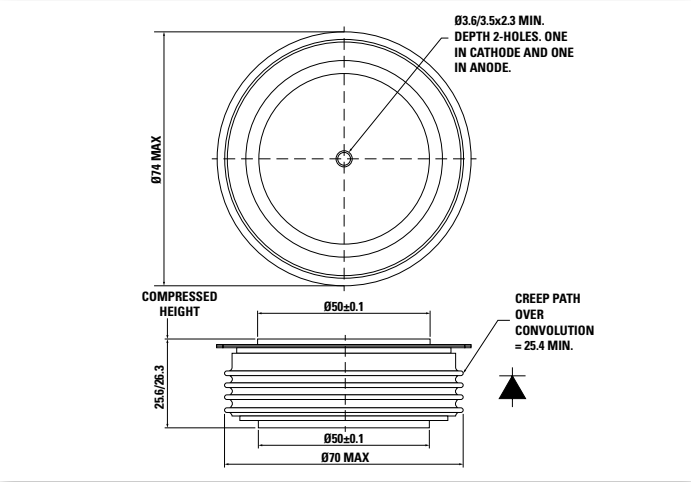

W55 - 101A352

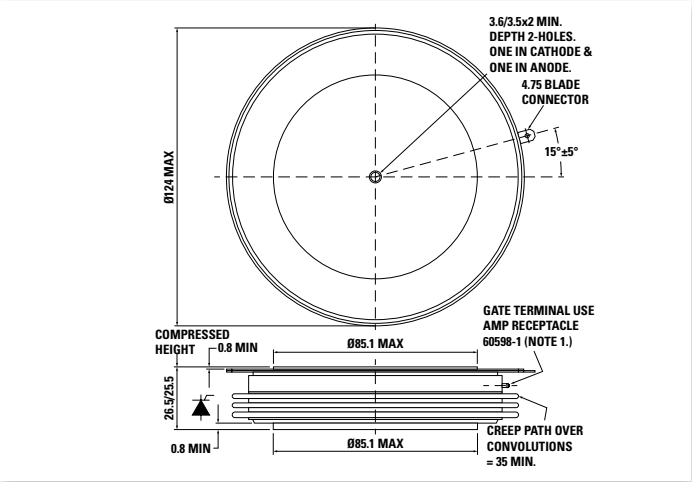

W56 - 101A365

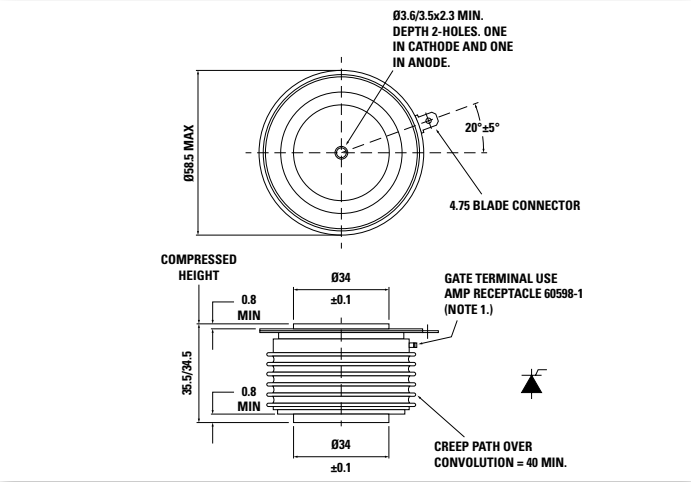

W57 - 101A363

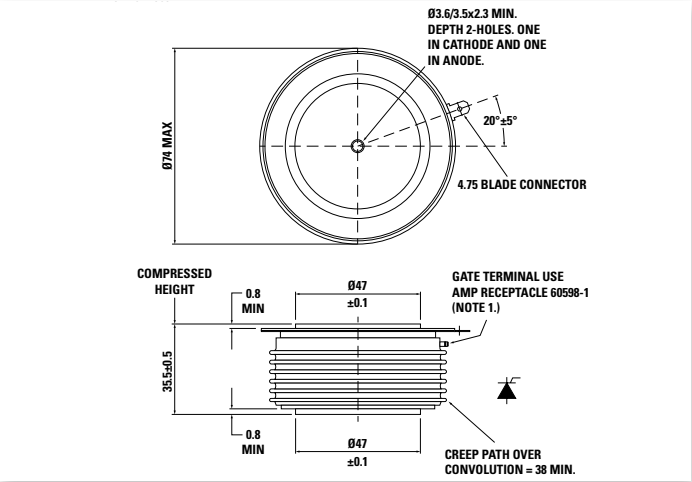

W58 - 101A237

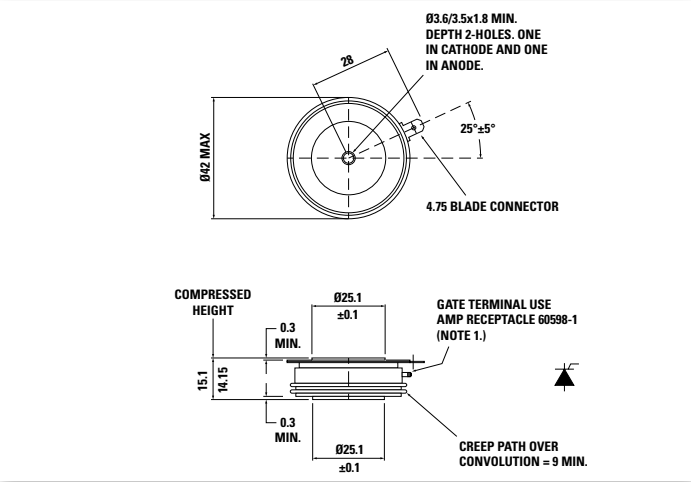

W59 - 100A359

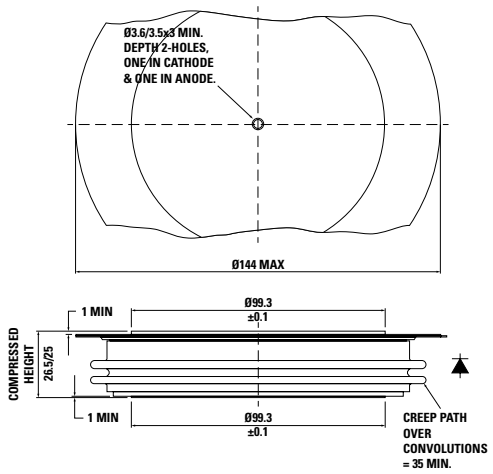

W62 - 101A314

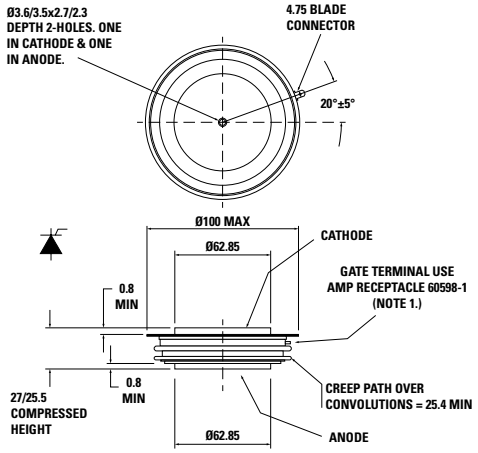

W67 - 101A366

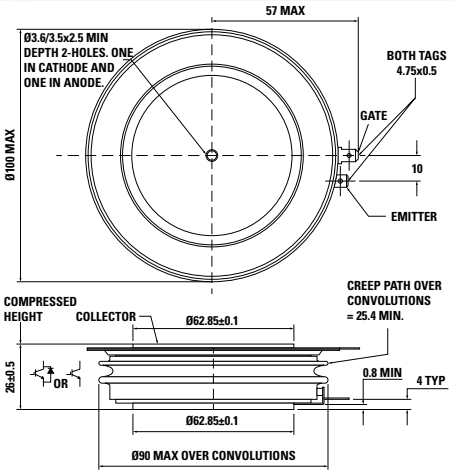

W68 - 100A367

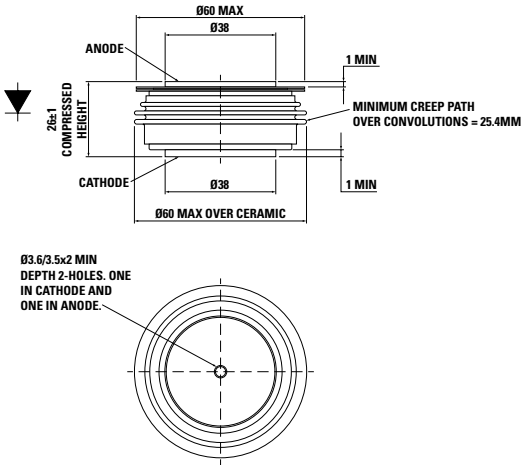

W70 - 101A357

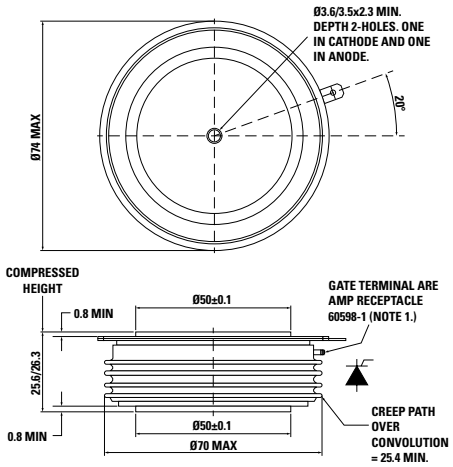

W71 - 101A375

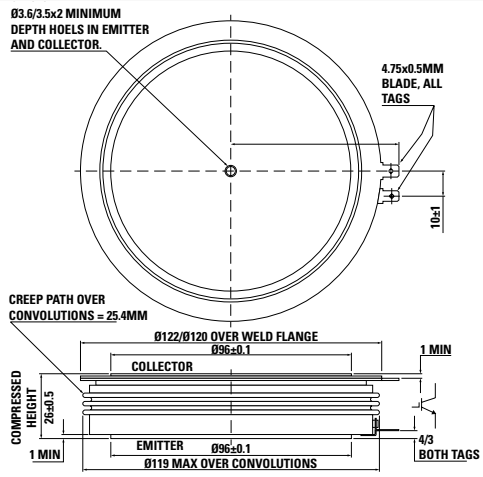

©2023 Littelfuse, Inc

W75 - 101A377

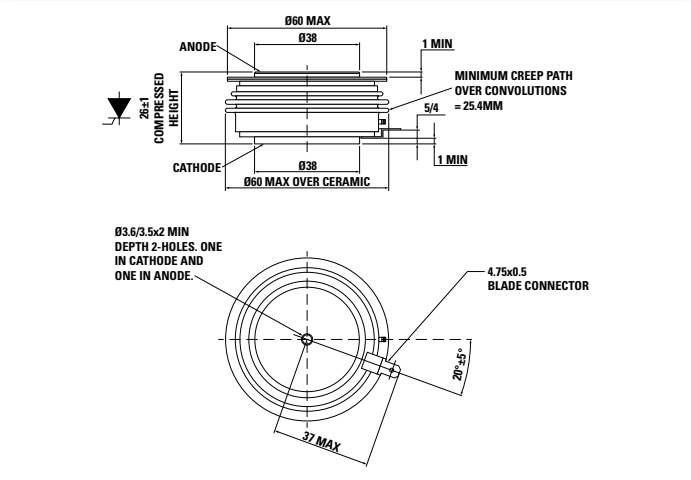

W76 - 101A392

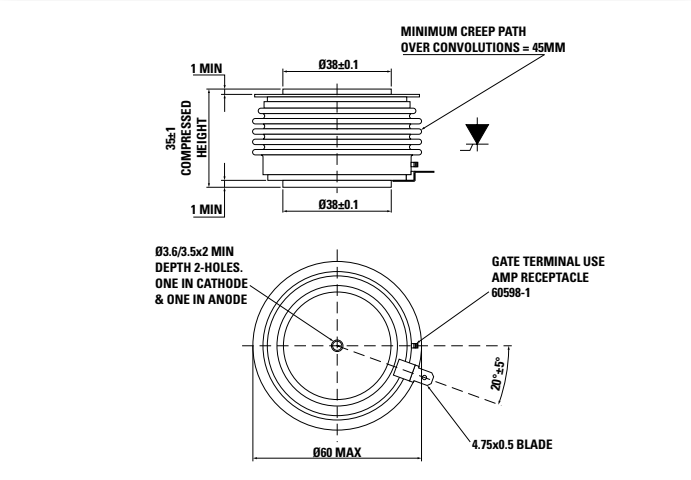

W77 - 101A372

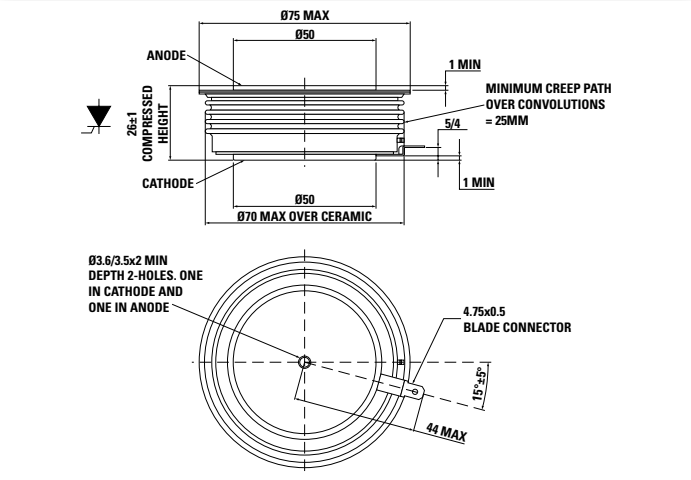

W78 - 101A393

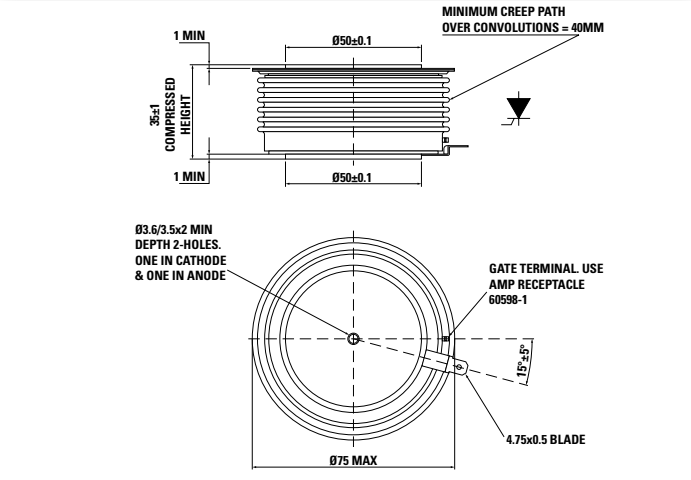

W79 - 101A391

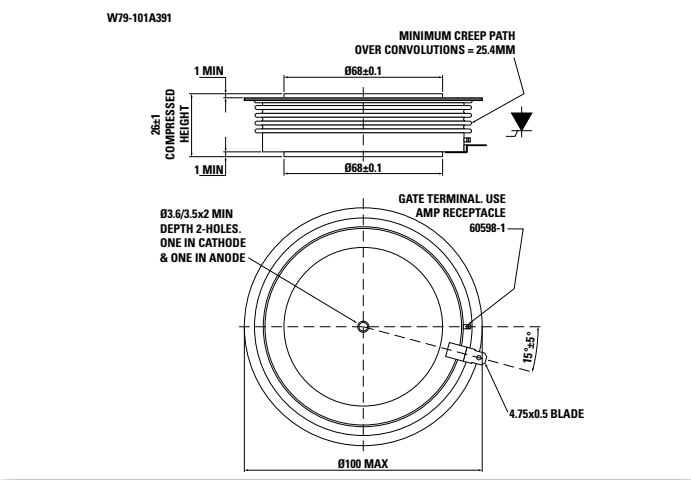

W80 - 101A394

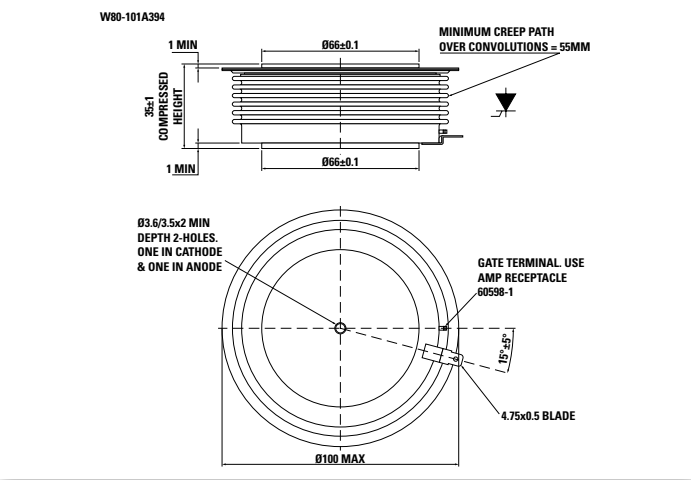

Outline Drawings

W81 - 101A373

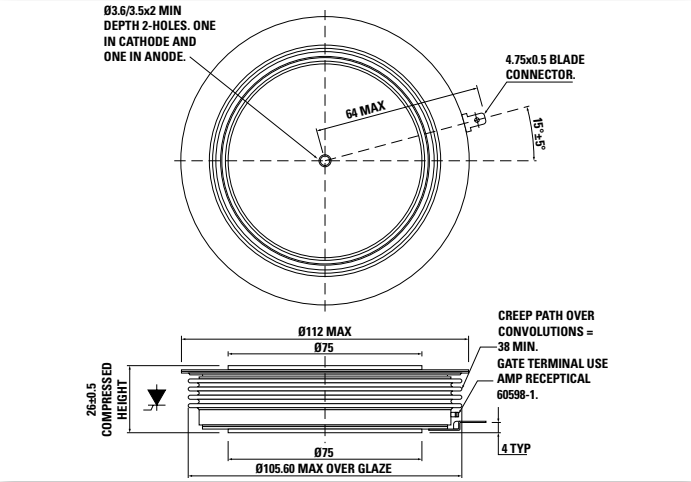

W82 - 101A395

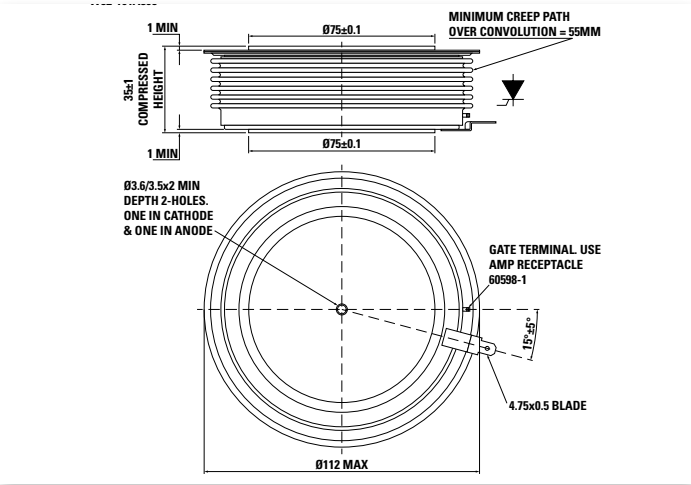

W85 - 101A388

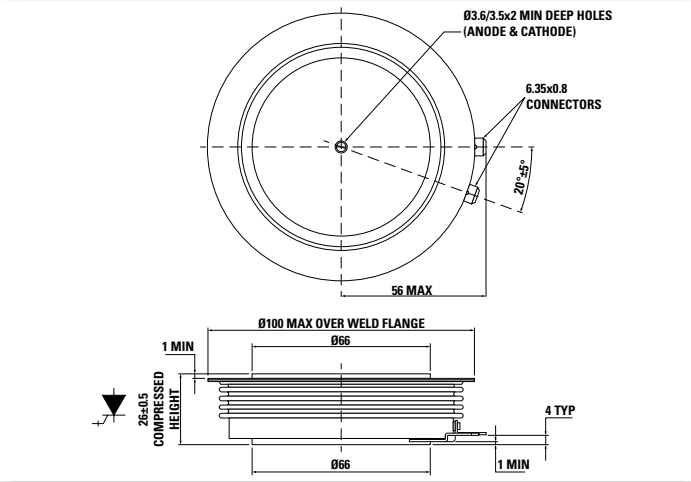

W71 - 101A375

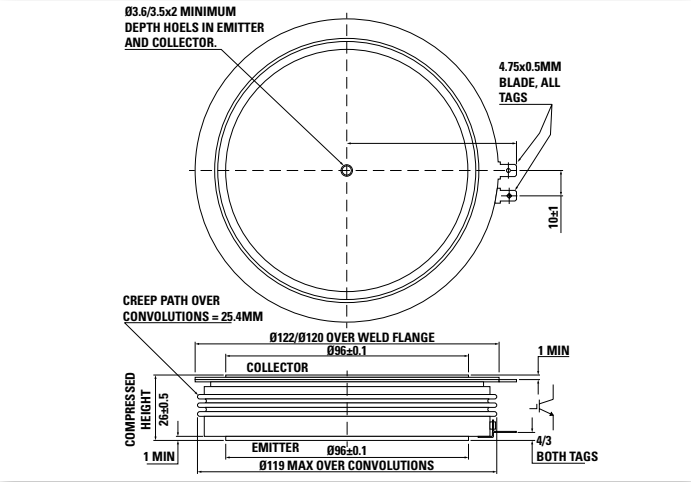

W87 101A376

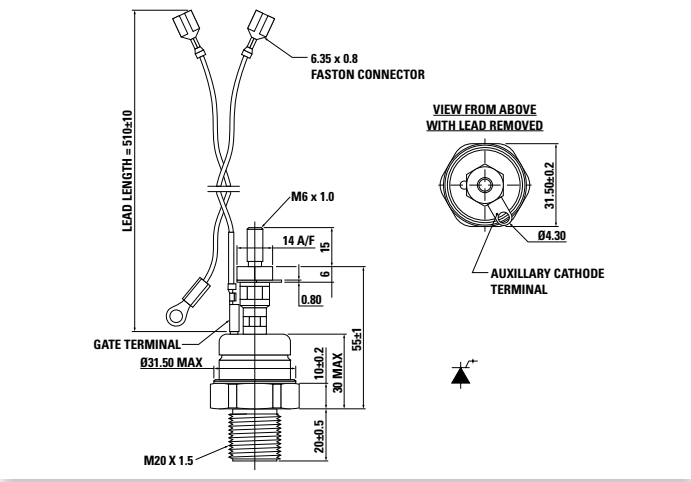

W89 - 100A368

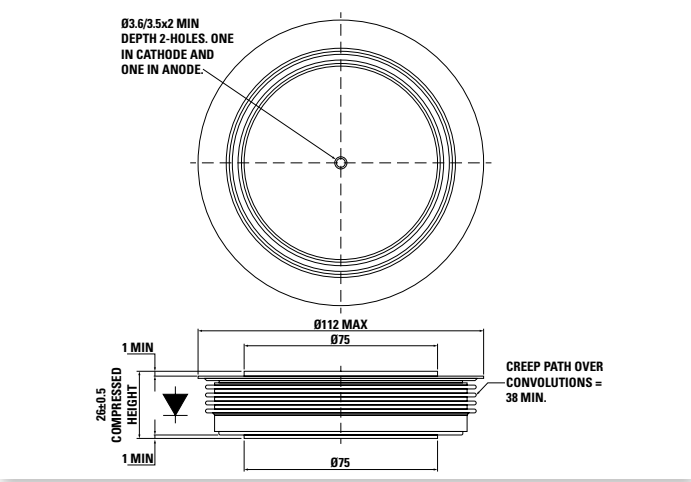

©2023 Littelfuse, Inc

W93 - 101A404

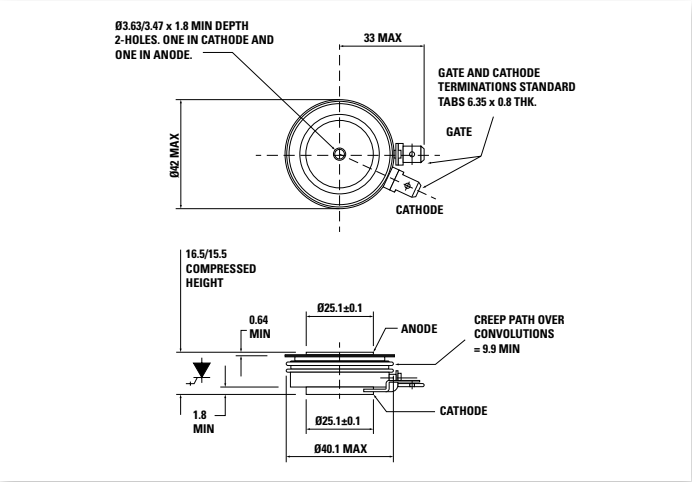

W94 - 100A372

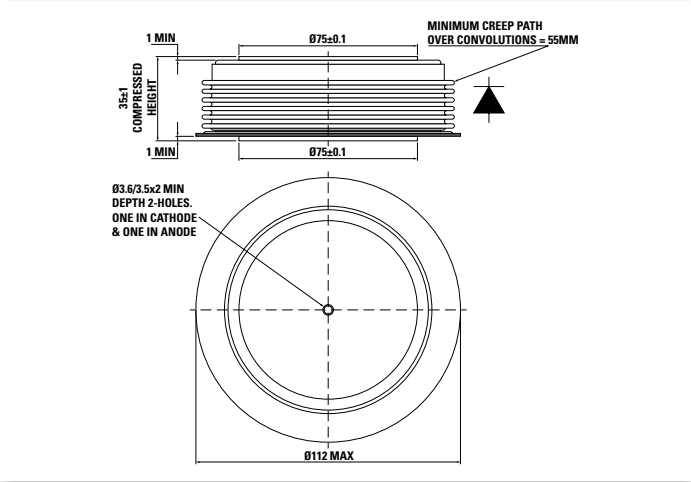

W95 - 101A403

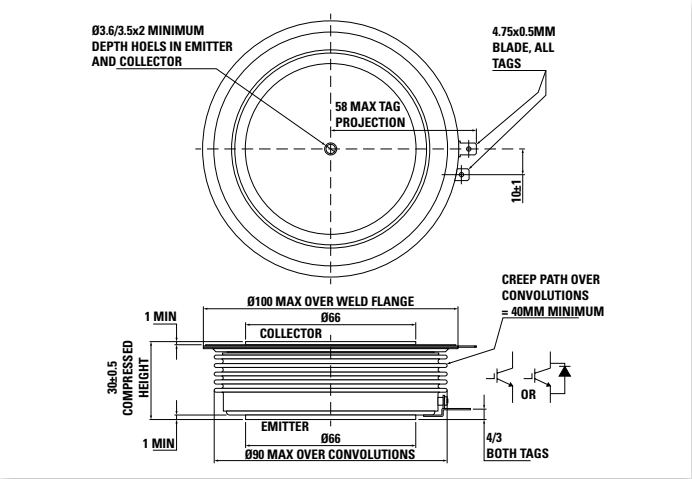

W96 - 101A409

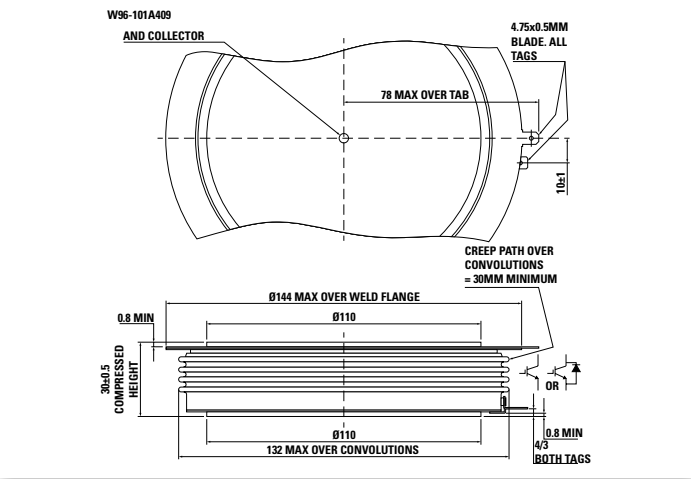

W97 - 100A379

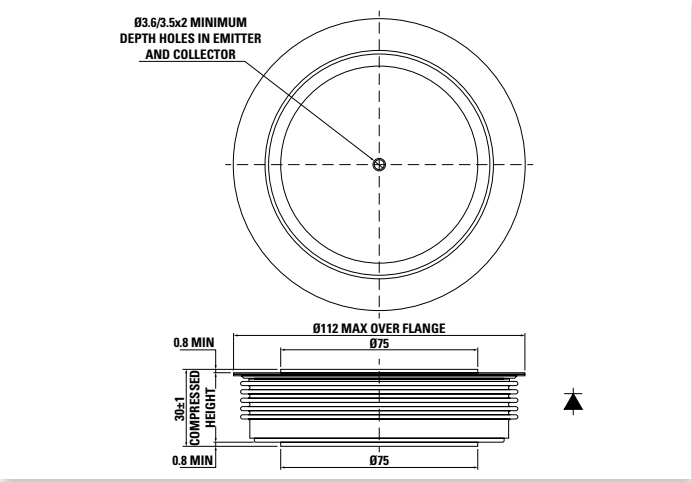

W98 - 101A413

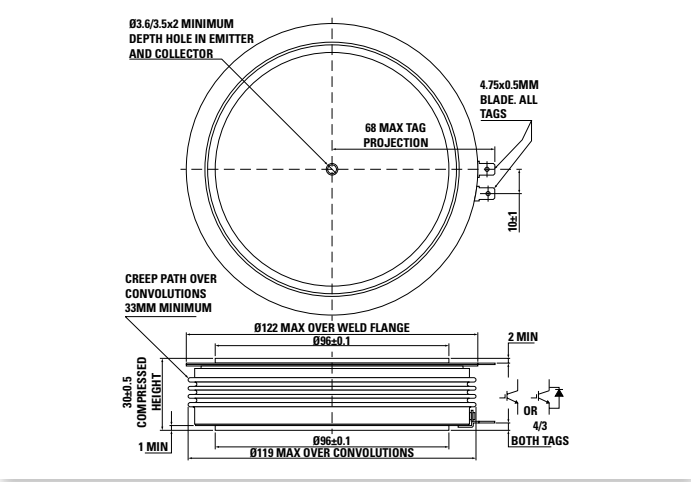

W99 - 100A383

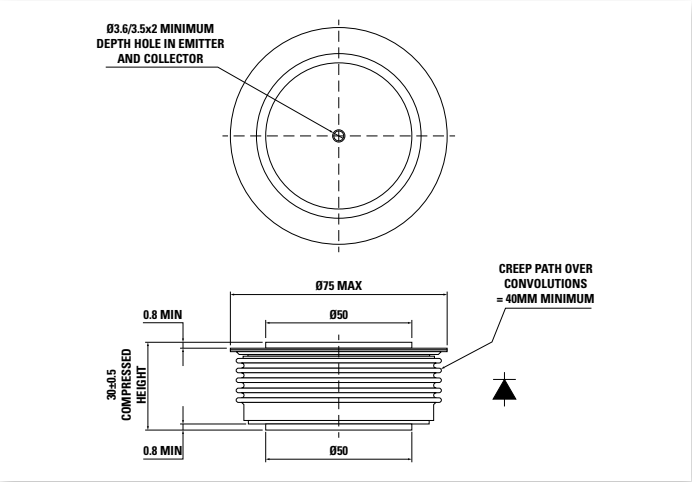

W100 - 100A384

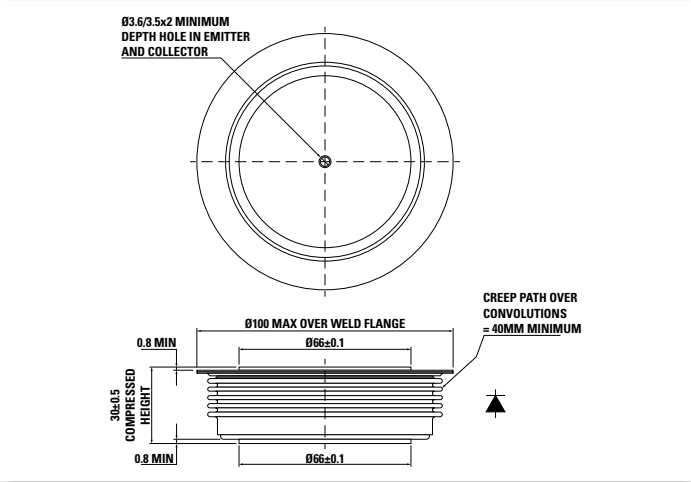

W101 - 100A380

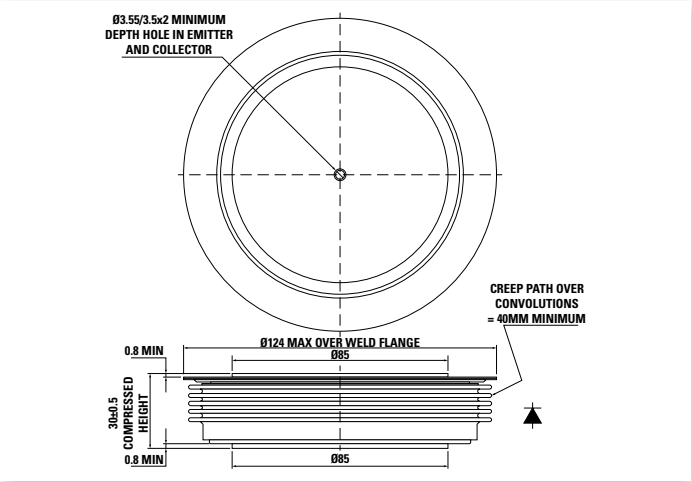

W103 - 101A401

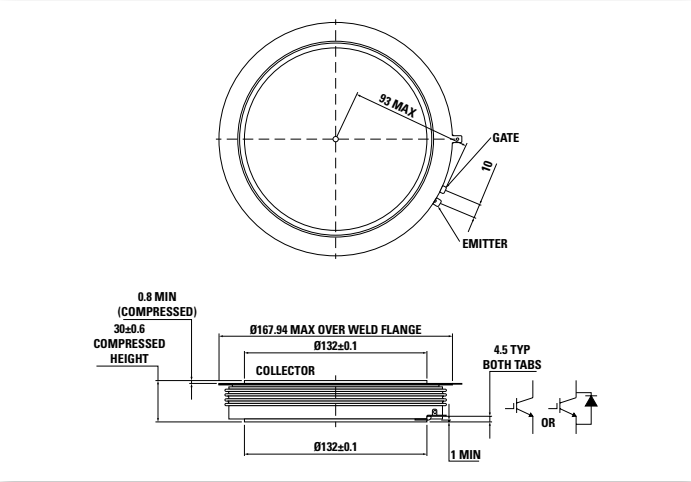

W104 - 101A408

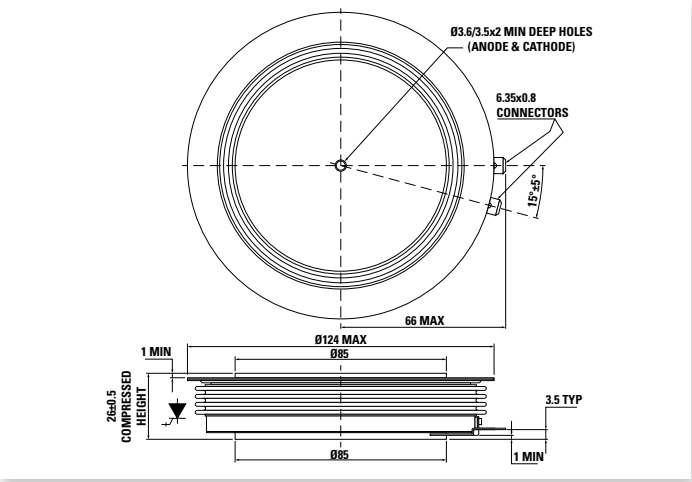

W105 - 100A385

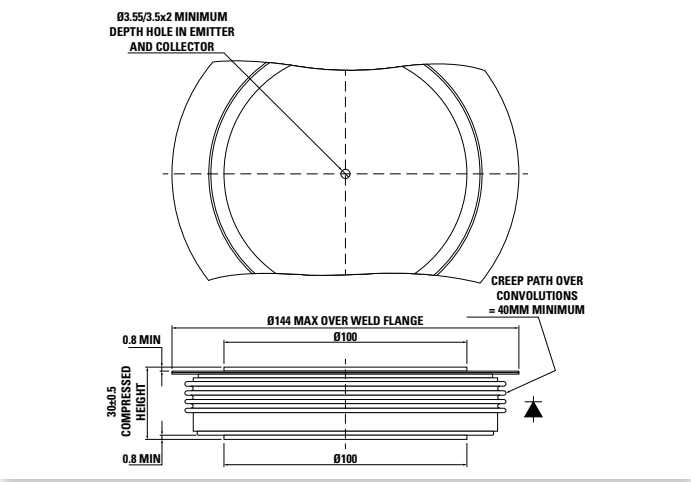

©2023 Littelfuse, Inc

W106 - 101A420

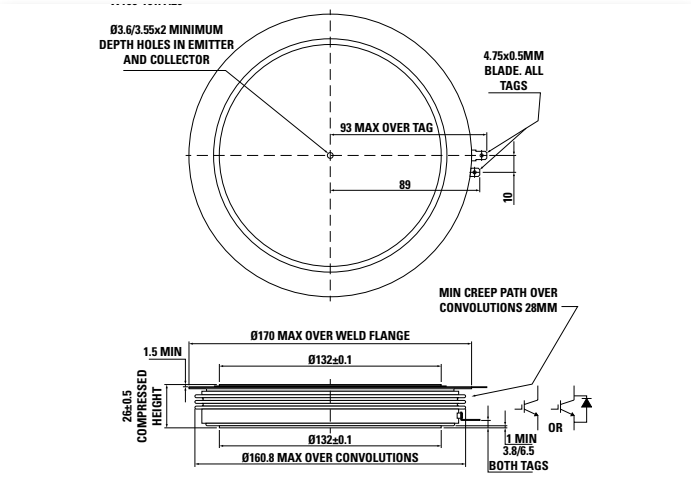

W107 - 101A411

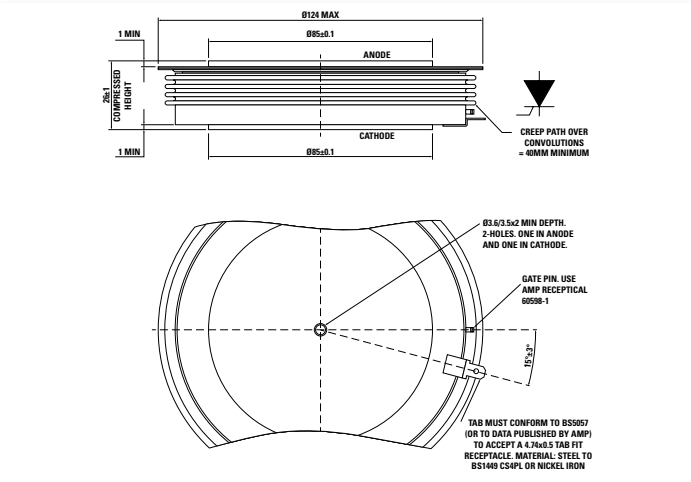

W108 - 101A410

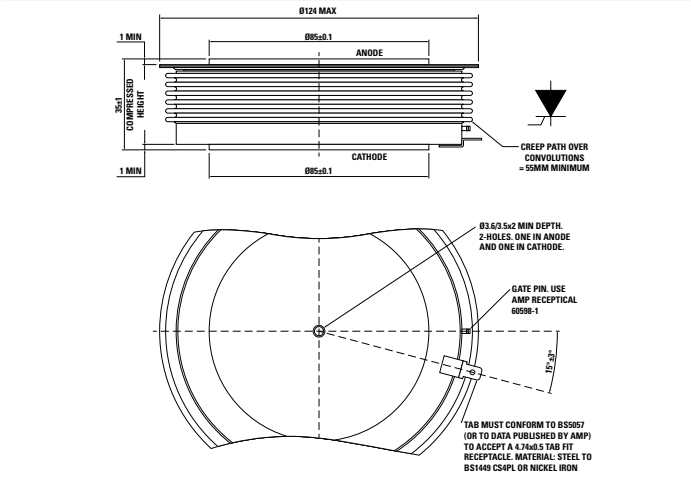

W109 - 101A425

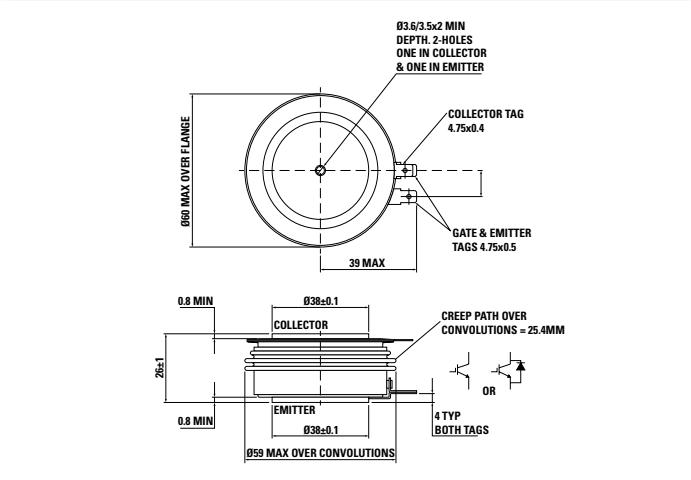

W110 - 101A418

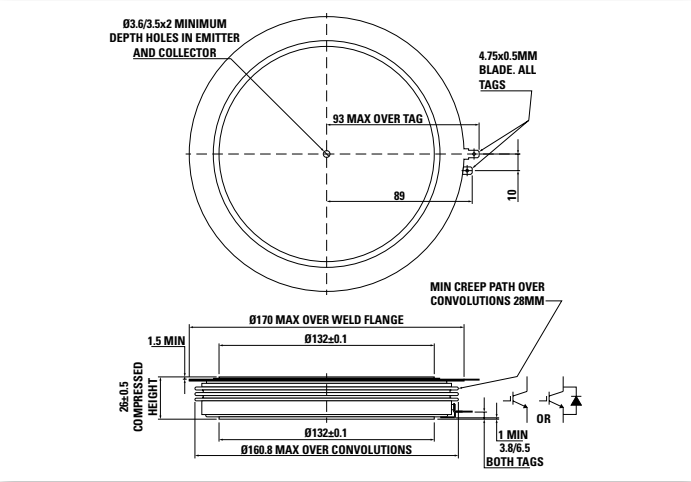

W111 - 100A378

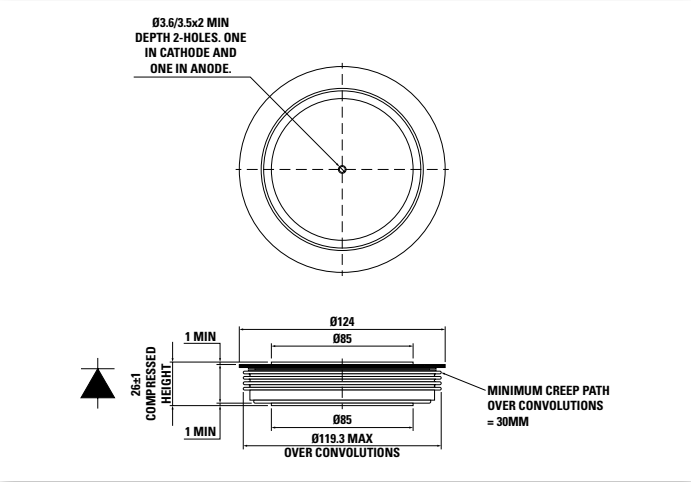

W112 - 100A377

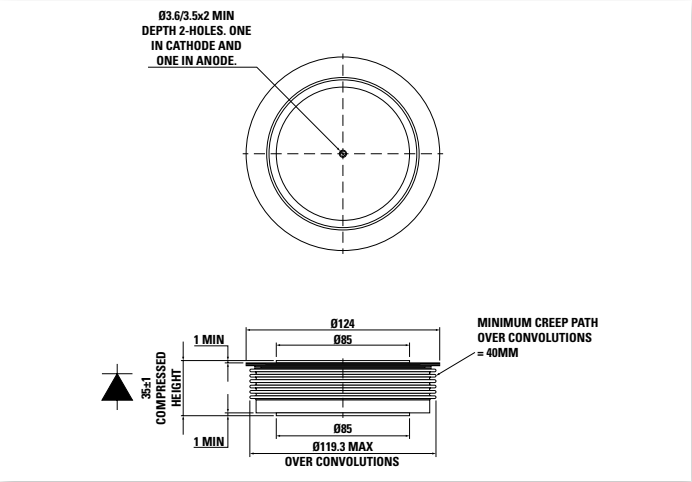

W113 - 100A393

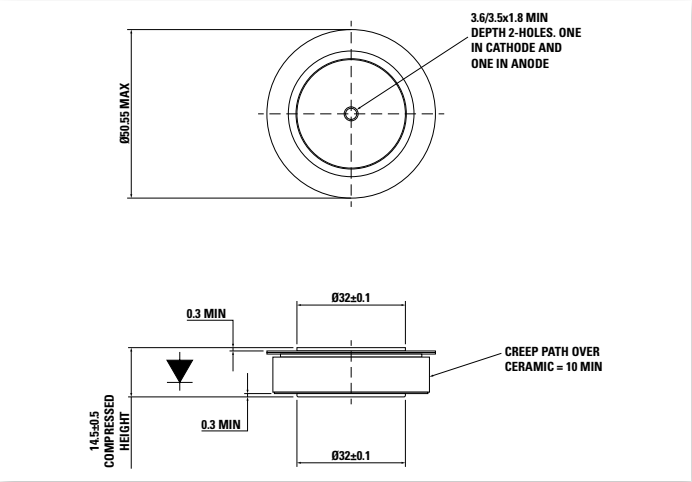

W114 - 100A394

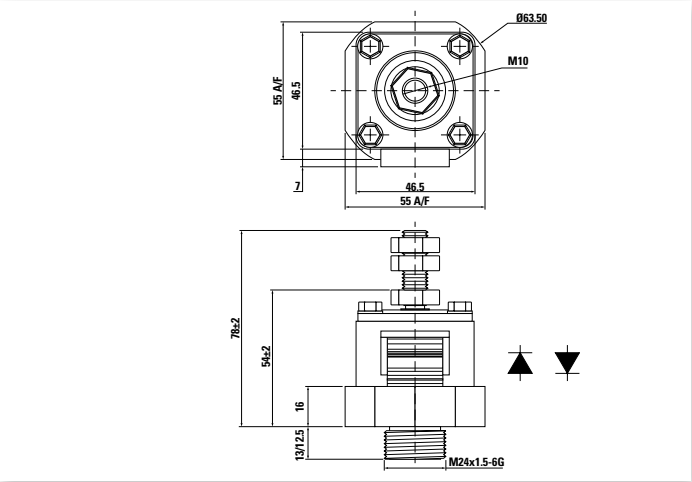

W115 - 101A427

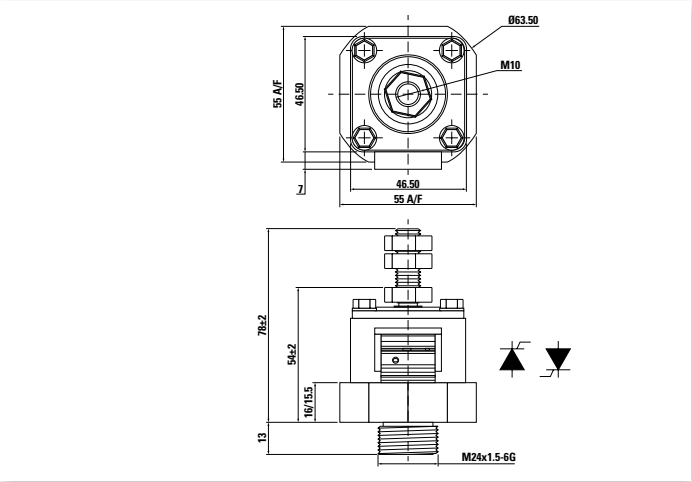

W116 - 150A132

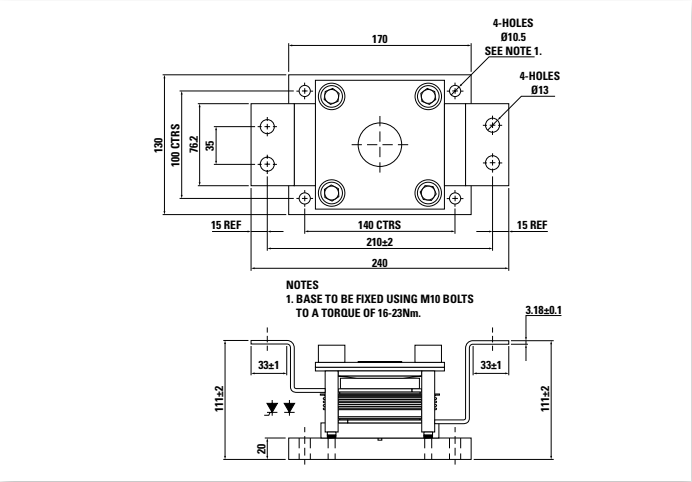

W117 - 100A375

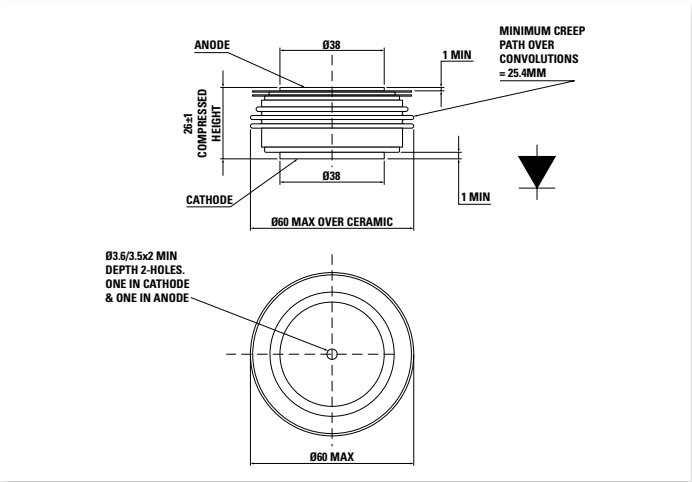

©2023 Littelfuse, Inc

W118 - 101A428

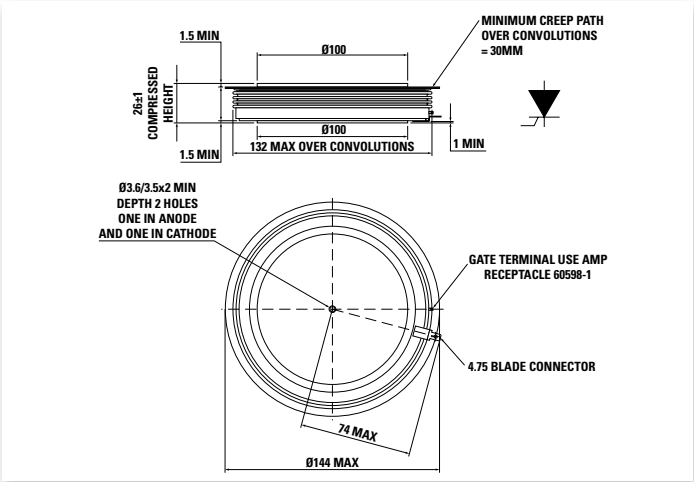

W119 - 101A421

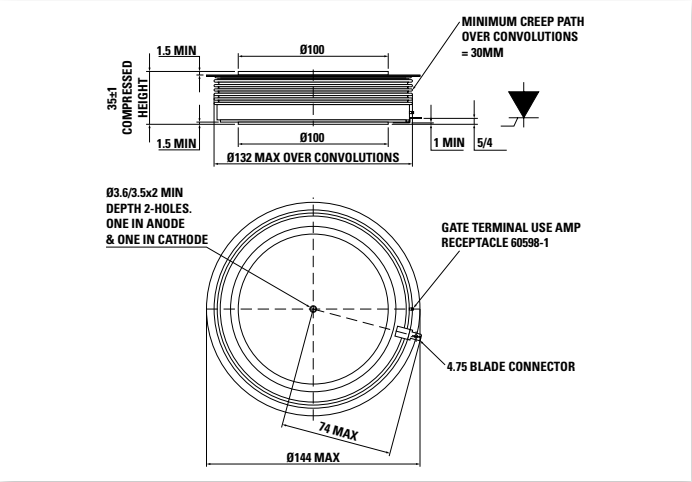

W120 - 100A395

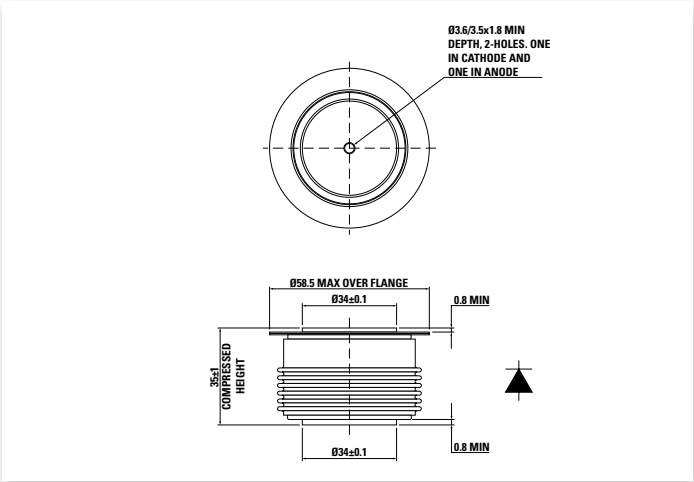

W121 - 100A381

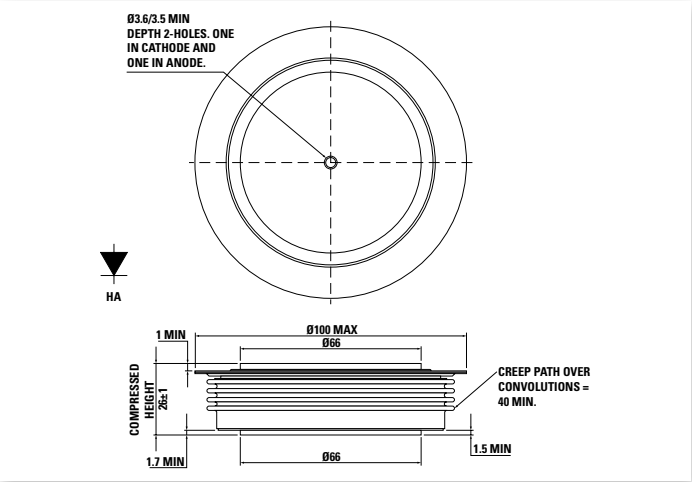

W122 - 100A396

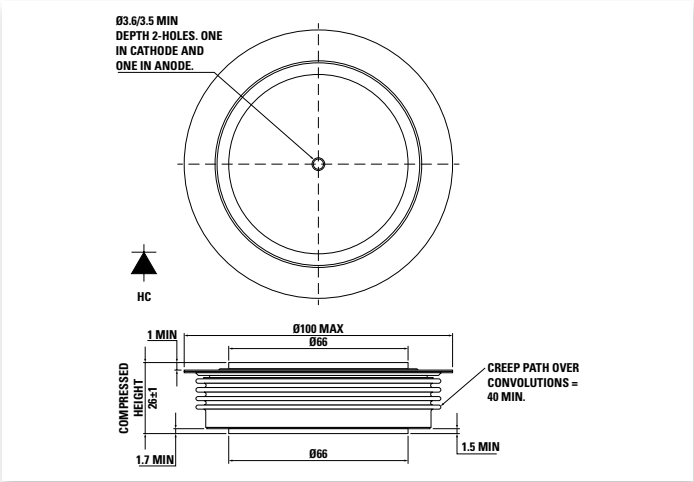

W123 - 100A382

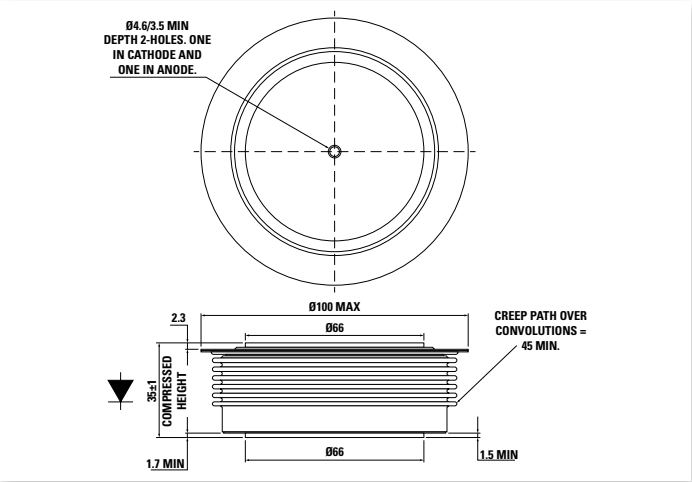

W124 - 100A397

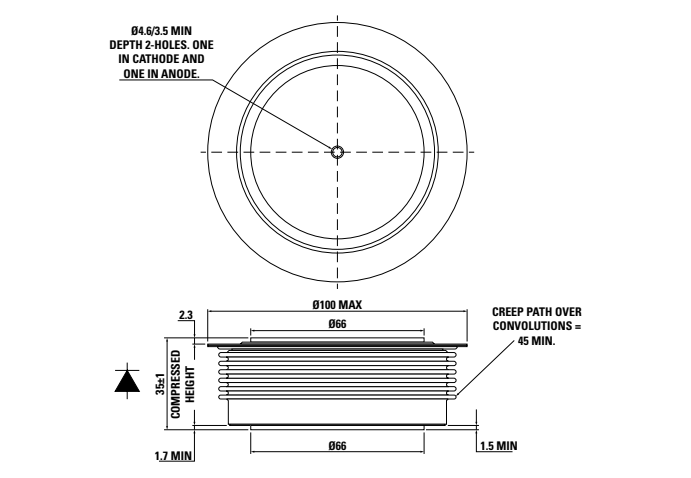

W126 - 100A368

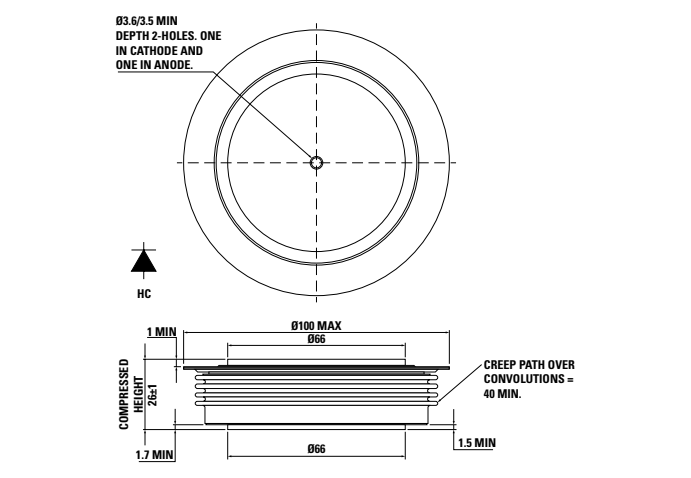

W127 - 100A368

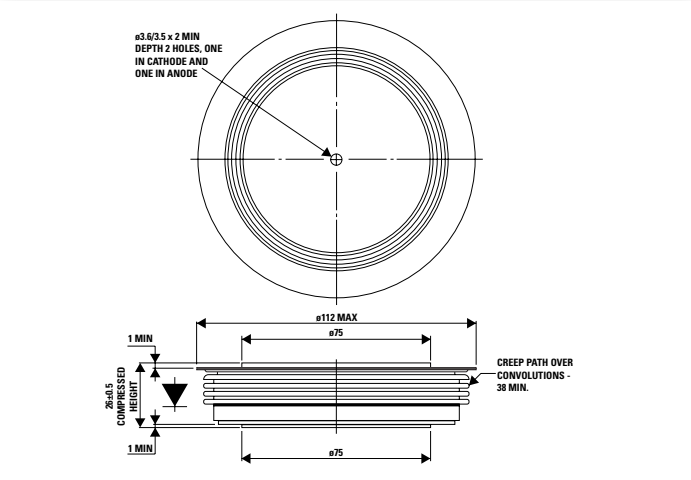

WD2 - 100A325

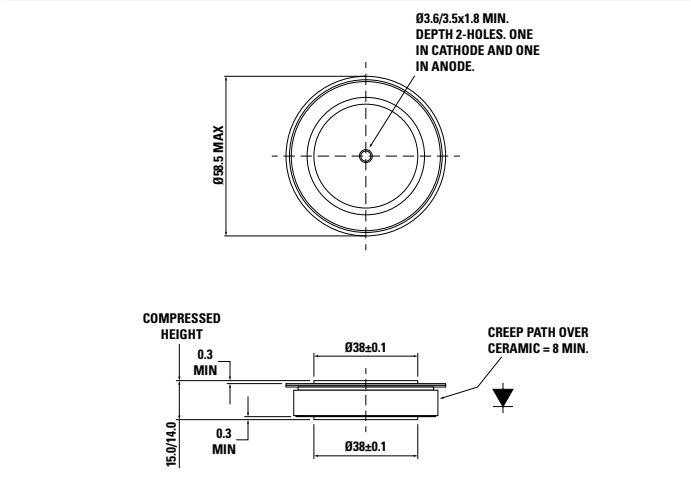

WD3 - 100A356

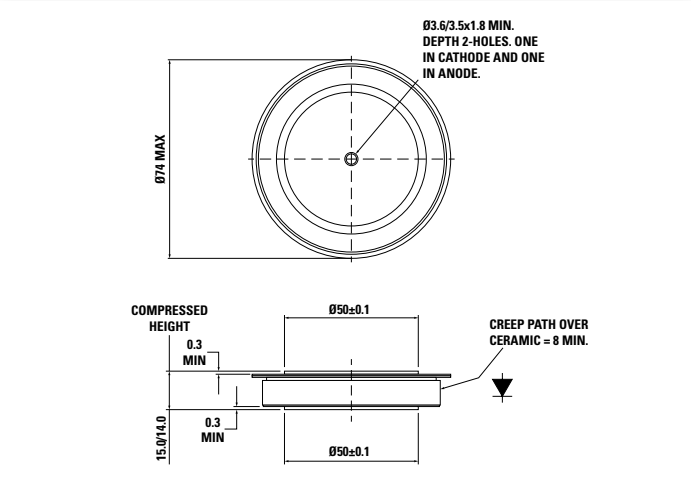

WD5 - 100A361 - 26 mm thick

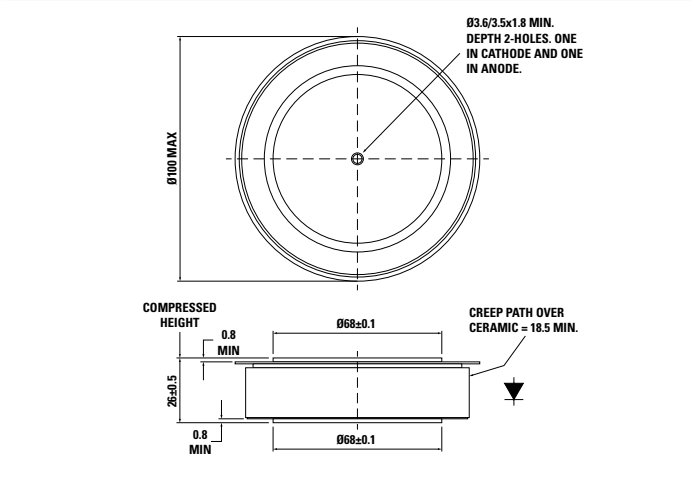

©2023 Littelfuse, Inc

WD6 - 100A360 - 33 mm thick

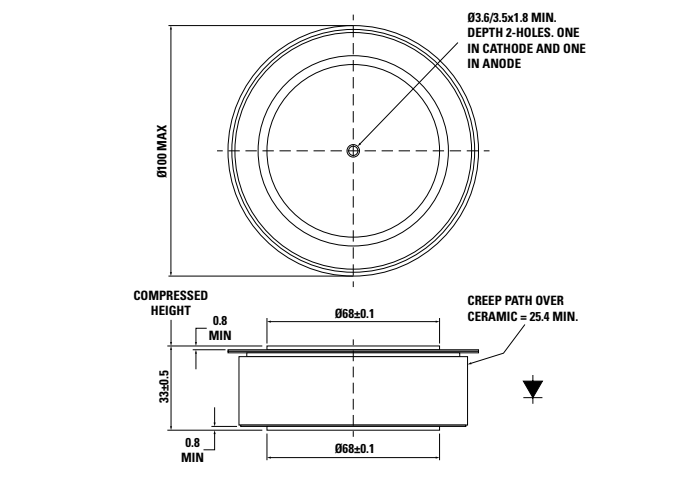

WD7 - 100A363

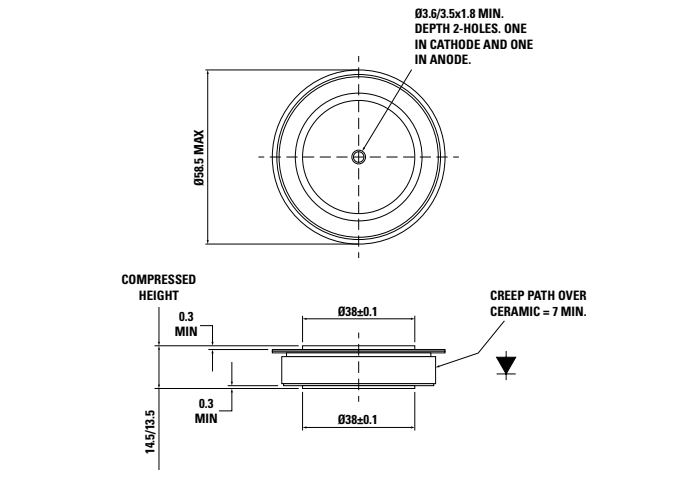

WD8 - 100A392

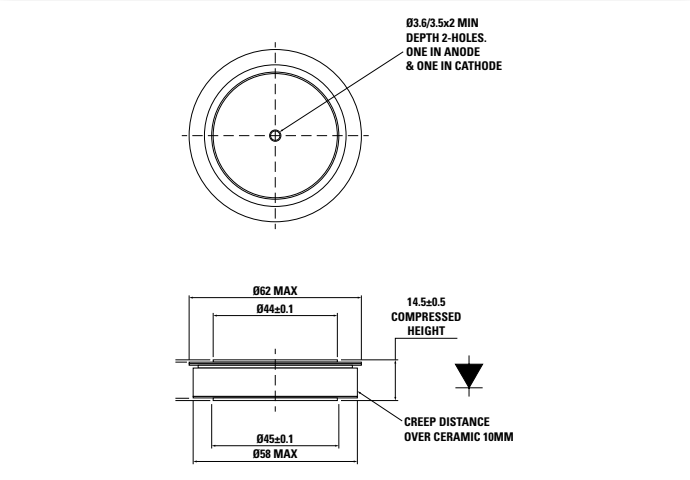

WP1 - 101A361

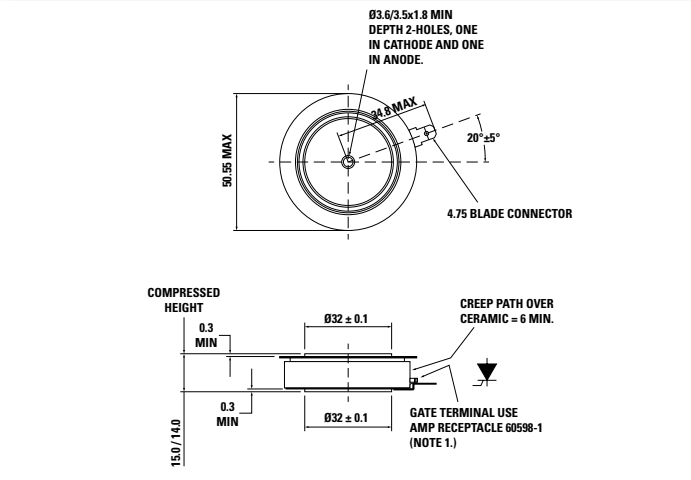

WP2 - 101A354

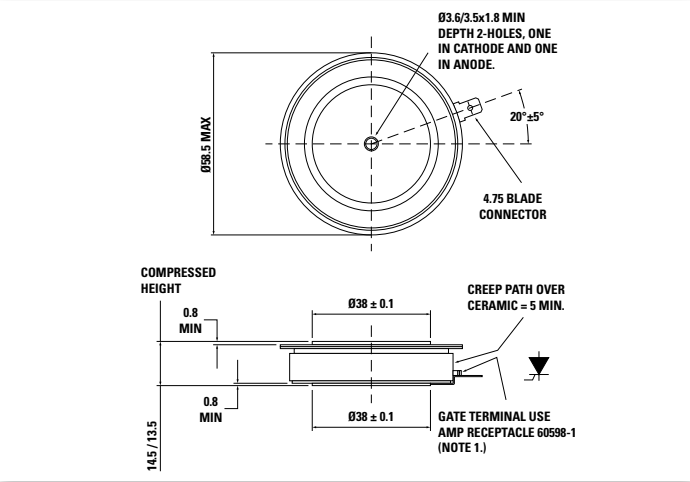

WP3 - 101A353

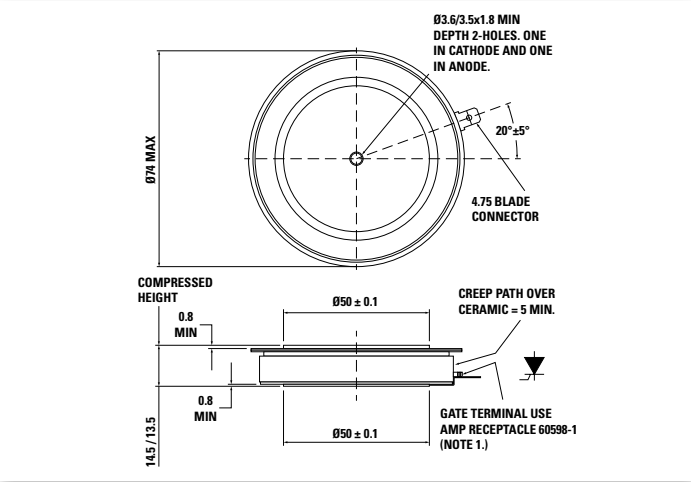

Outline Drawings

WP4 - 101A355

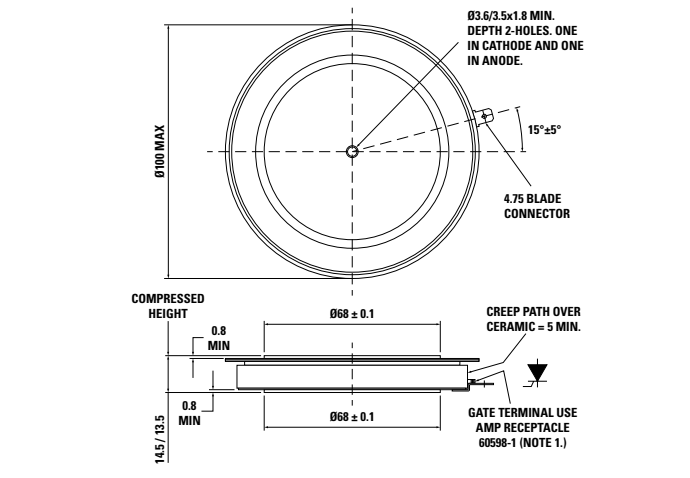

WP5 - 101A356

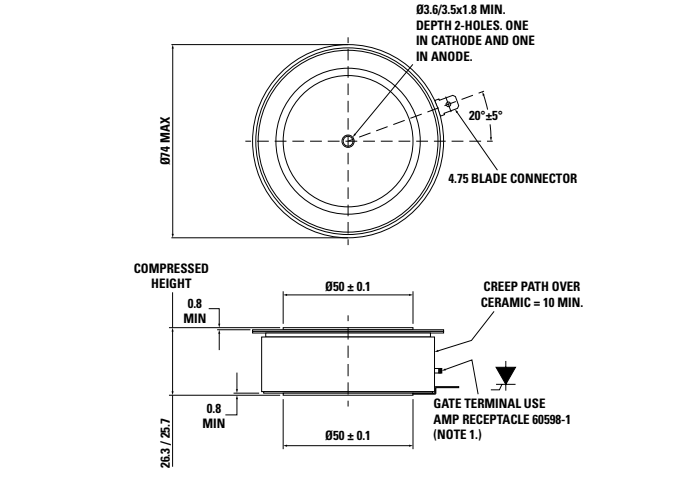

WP6 - 101A389

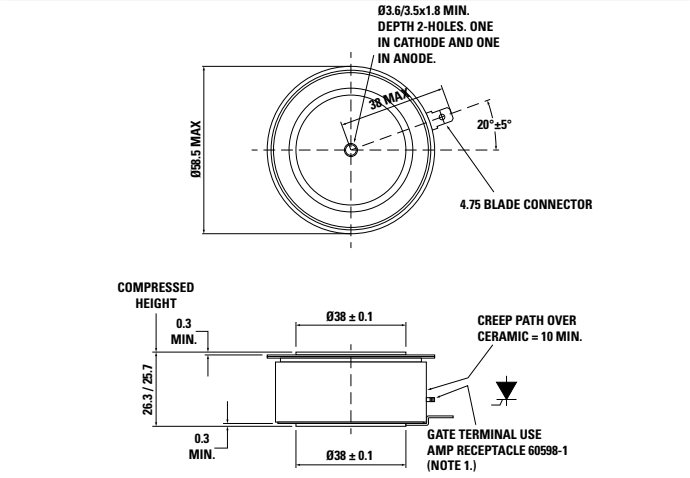

WC1 - XK0450SA056M

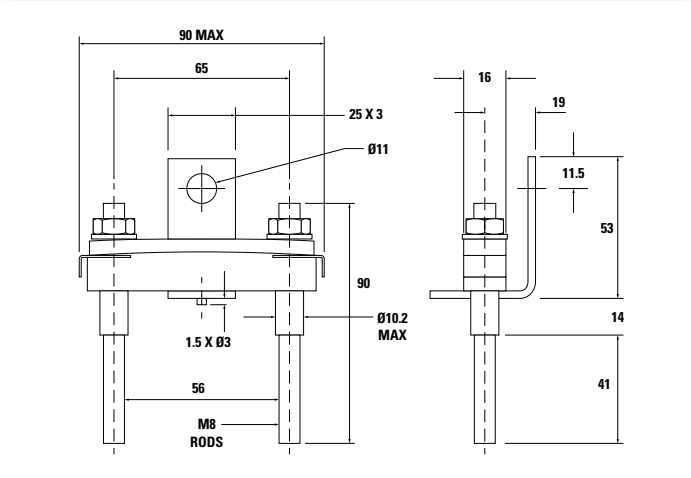

WC2 - XK0450DA056M

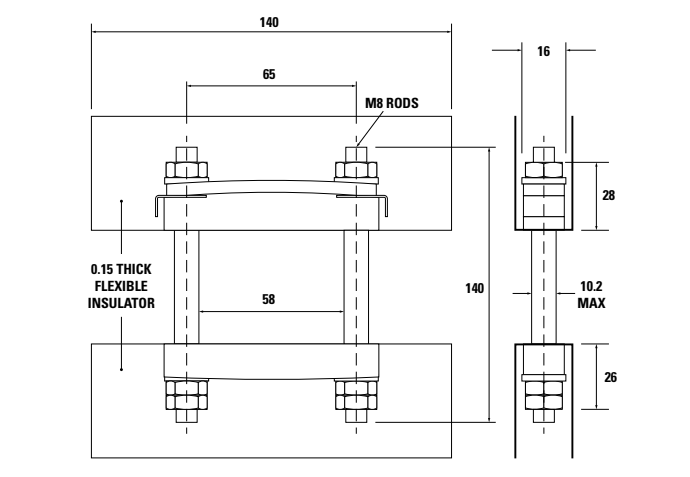

WC3 - XK0450DT056M

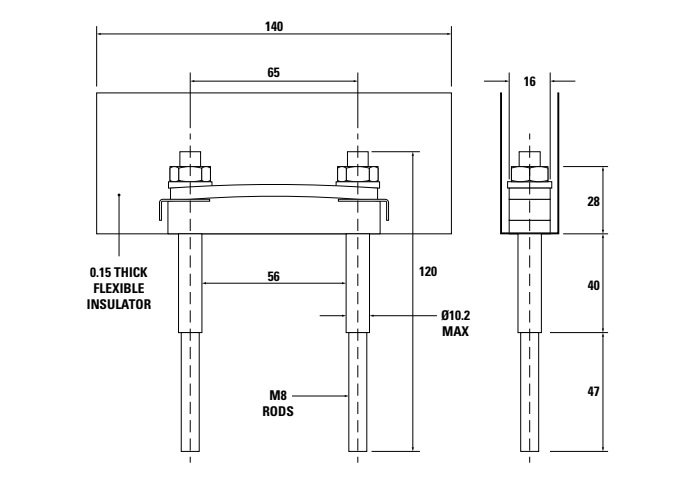

©2023 Littelfuse, Inc

WC4 - XK0550SA056M

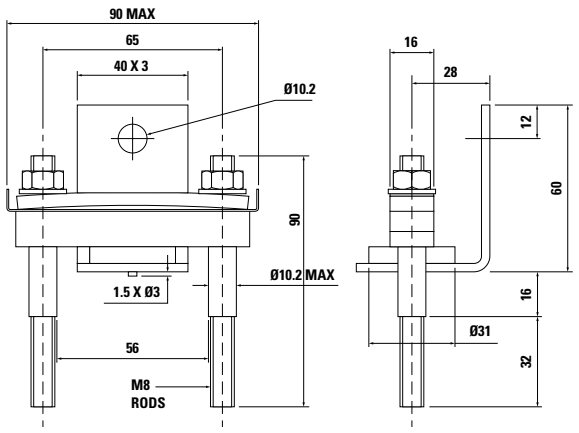

WC5 - XK0550DA056M

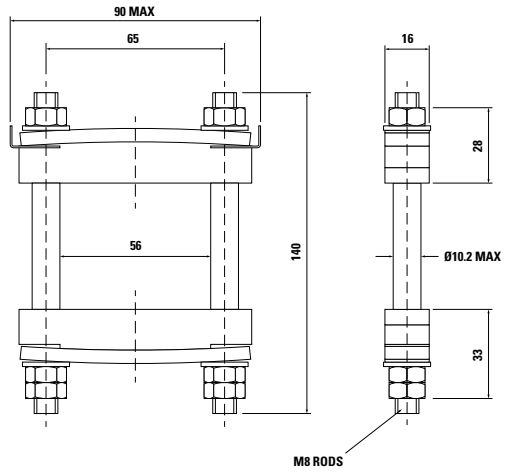

WC6 - XK0900SA056M

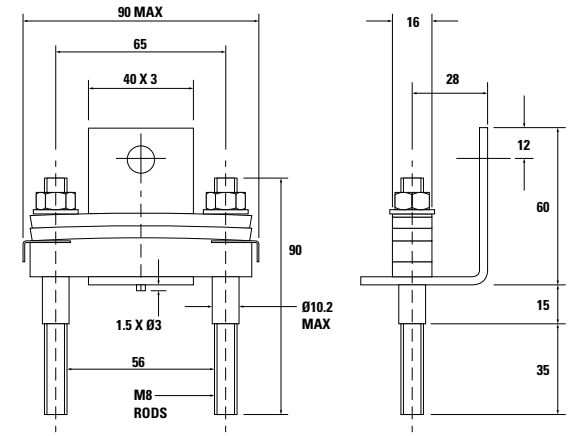

WC7 - XK0900DA056M

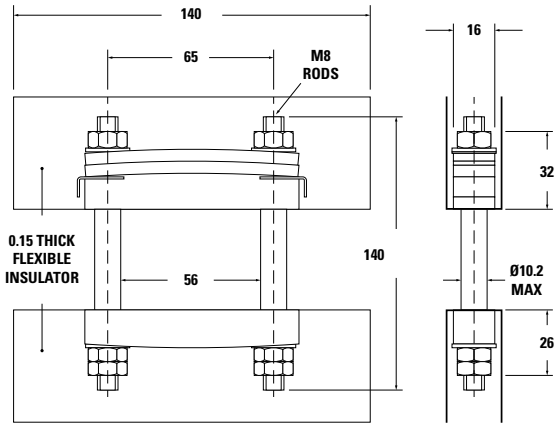

WC8 - XK0900DT056M

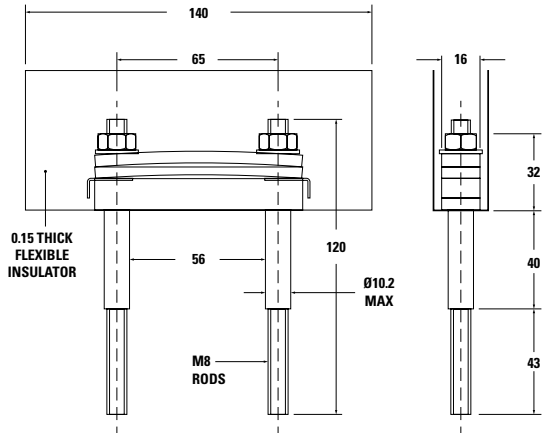

WC9 - XK0600SA074M

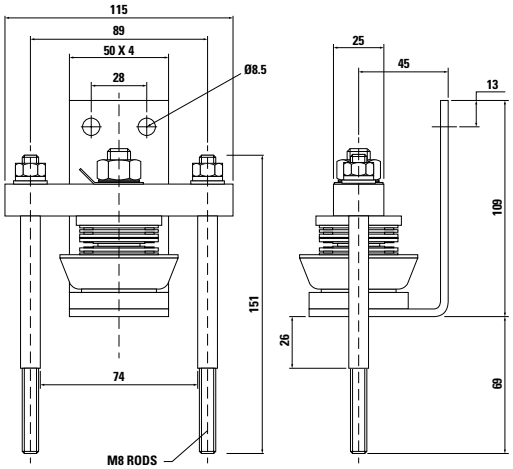

Outline Drawings

WC10 - XK0600DA074M

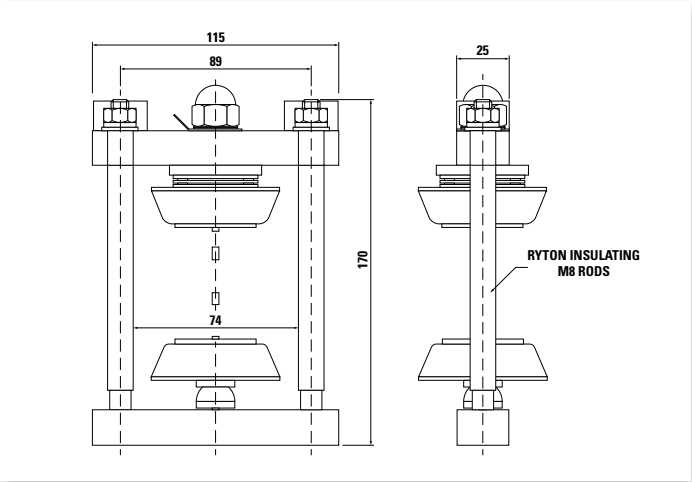

WC11 - XK1000SA074M

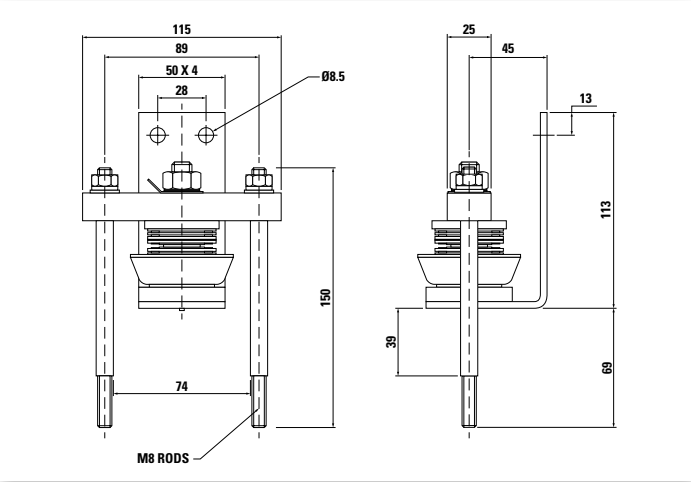

WC12 - XK1000DA074M

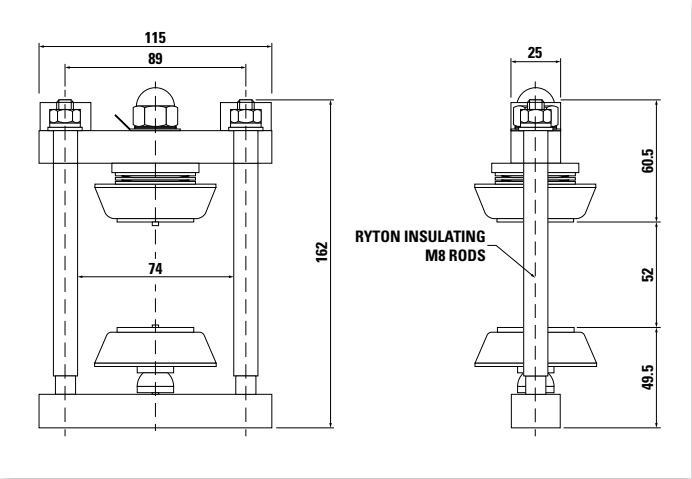

WC13 - XK1100DA076M

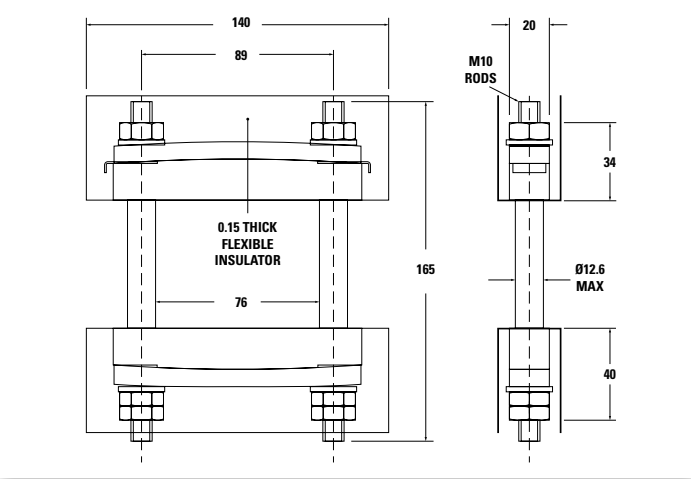

WC14 - XK1130SA076M

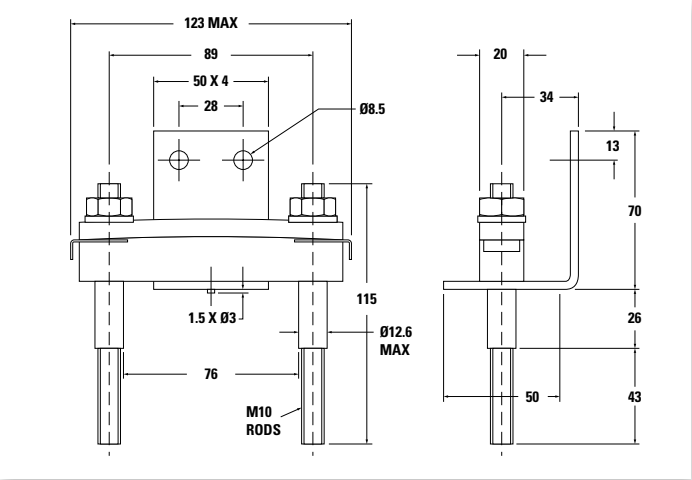

WC15 - XK1130DA076M

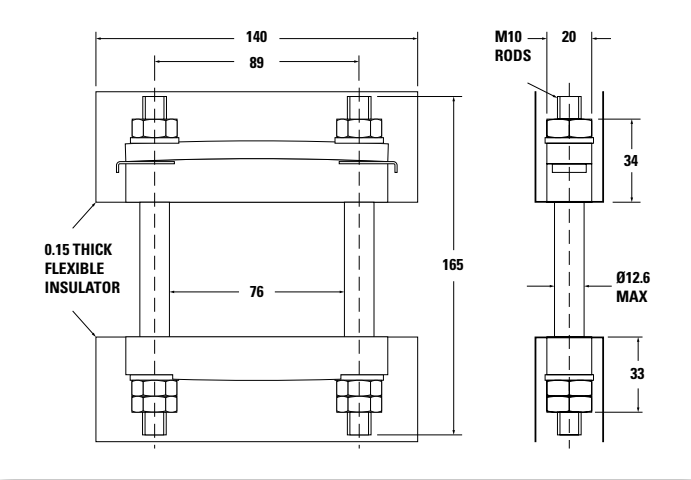

©2023 Littelfuse, Inc

WC16 - XK1130DT076M

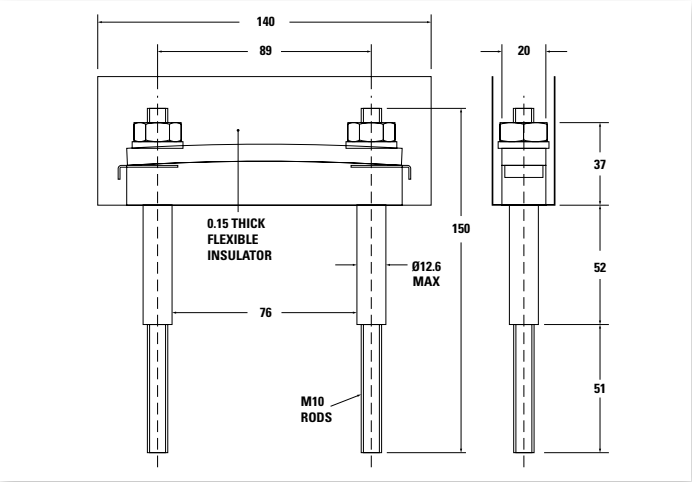

WC17 - XK1800SA076M

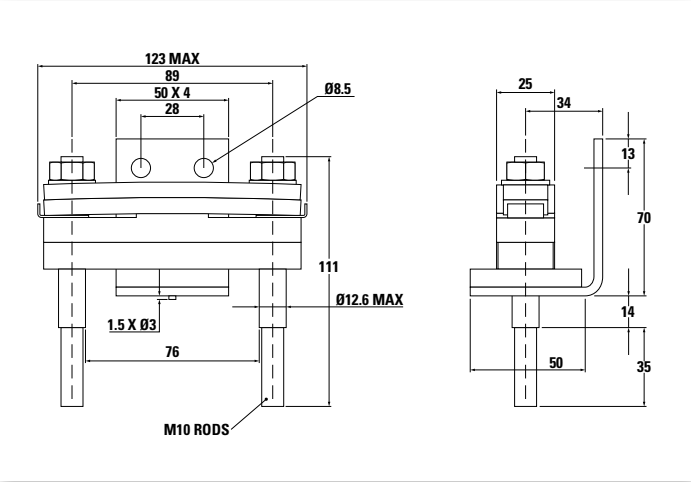

WC18 - XK1800DA076M

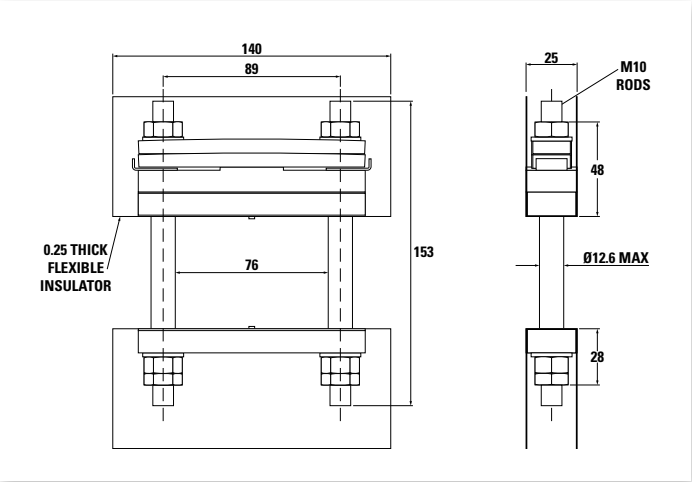

WC19 - XK1800DT076M

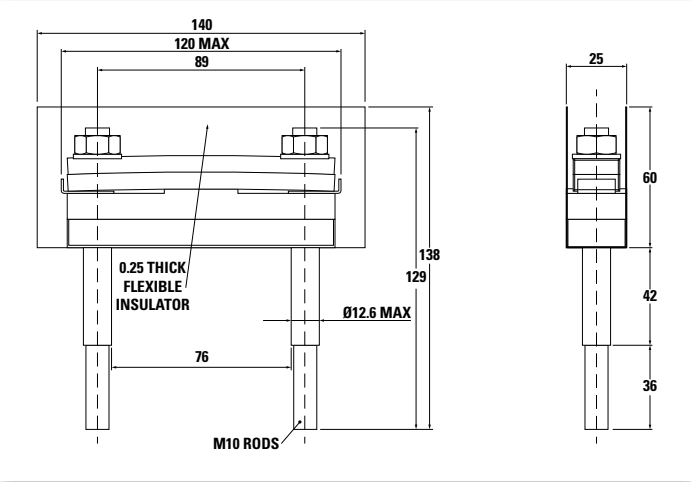

WC20 - XK2100SA076M/ML

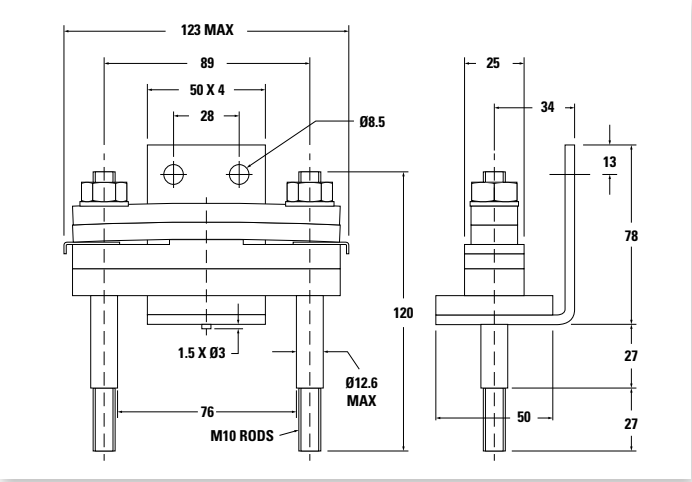

WC21 - XK2100DA076M/ML

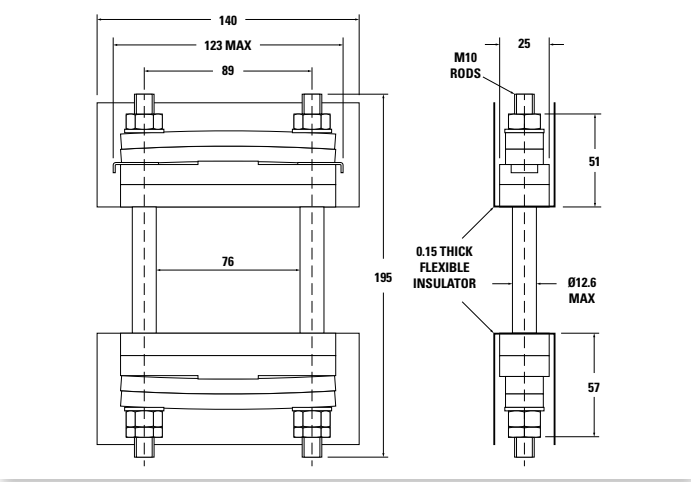

FPO WC22 - XK2140SA076M/ML

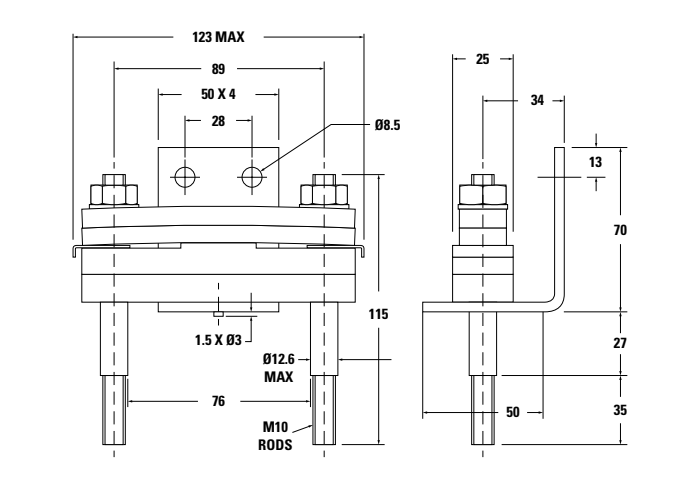

WC23 - XK2140DA076M/ML

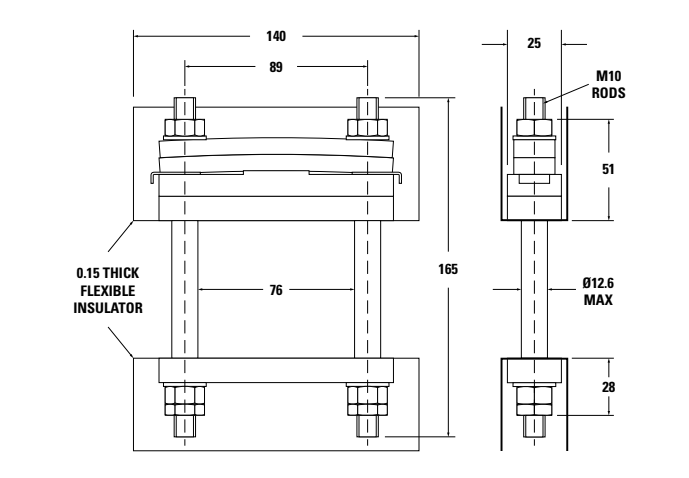

WC24 - XK2140DT076M/ML

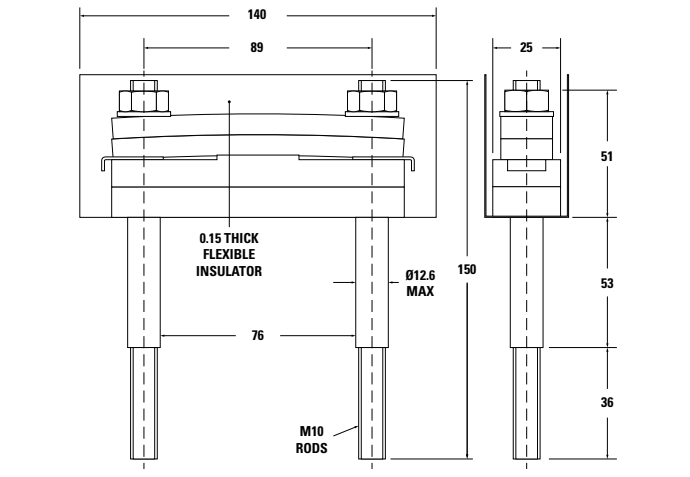

WC25 - XK2700SA076M

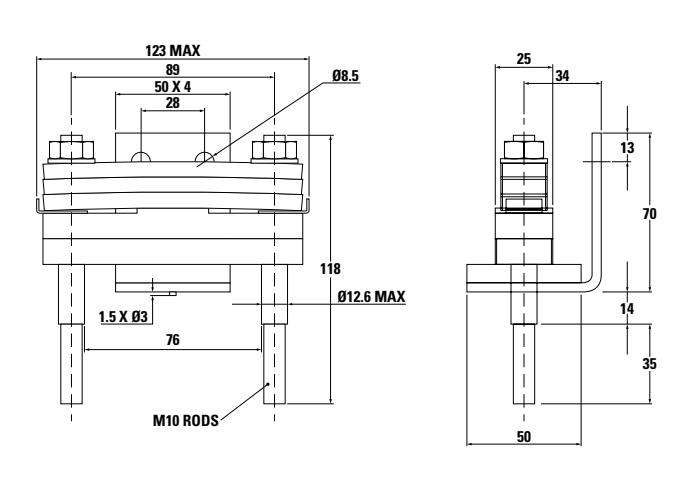

WC26 - XK2700DA076M

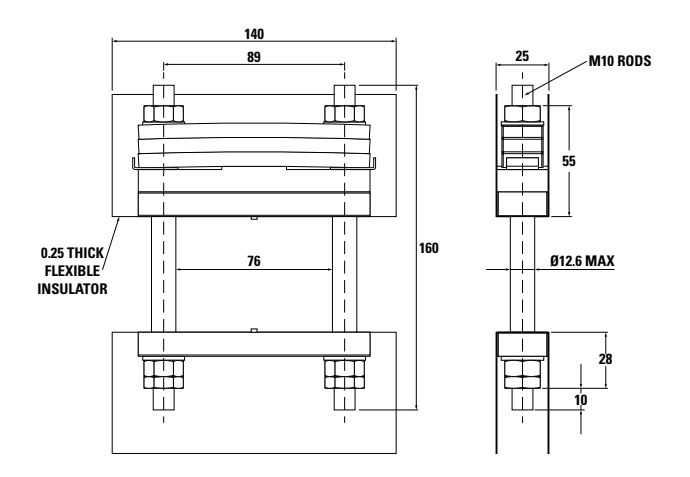

WC27 - XK2700DT076M

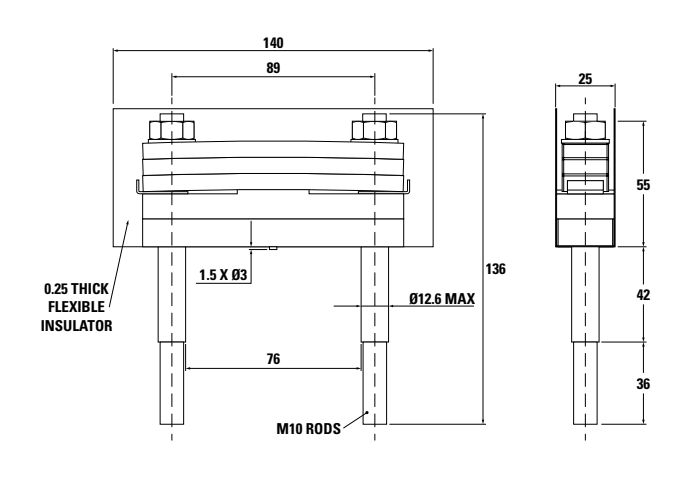

©2023 Littelfuse, Inc

WC28 - XK2000SA114M

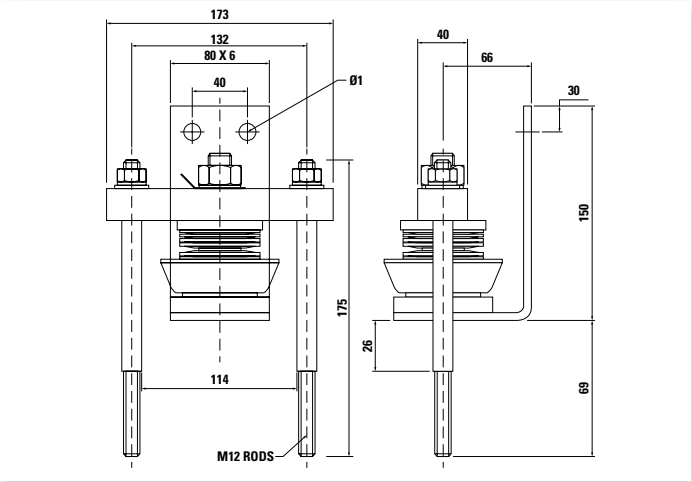

WC29 - XK2000DA114M

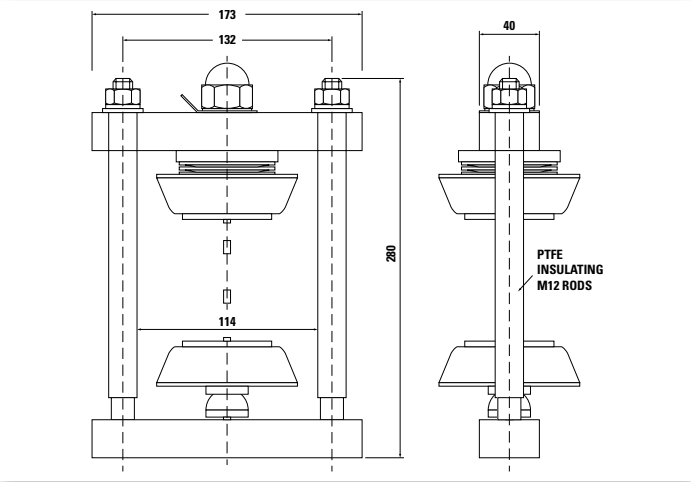

WC30 - XK2500SA114M

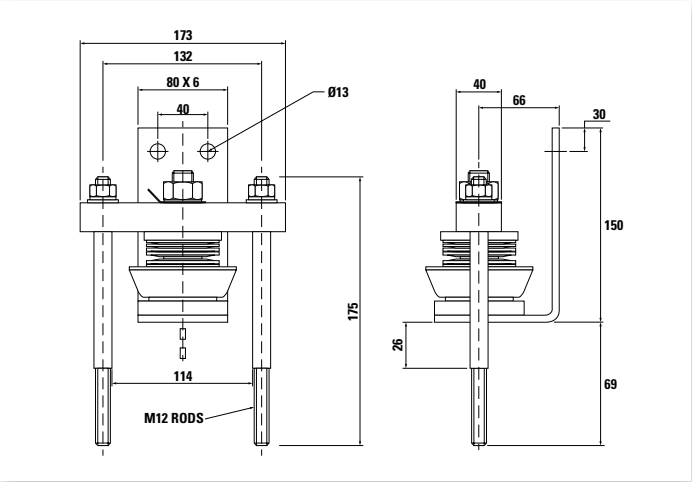

WC31 - XK2500DA114M

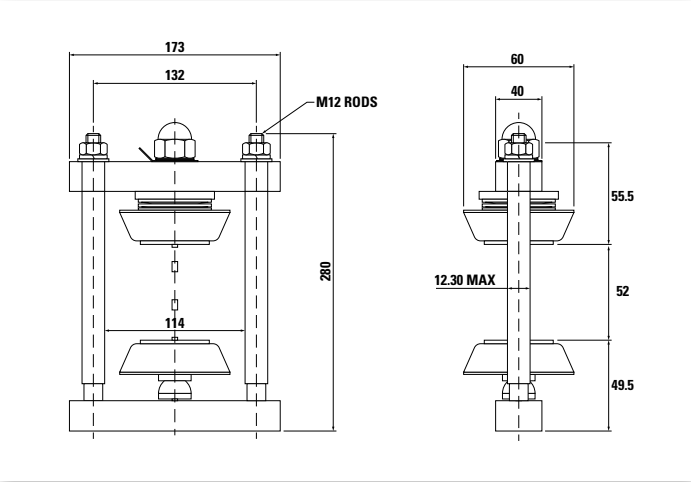

WC32 - XK2500SA116M/ML

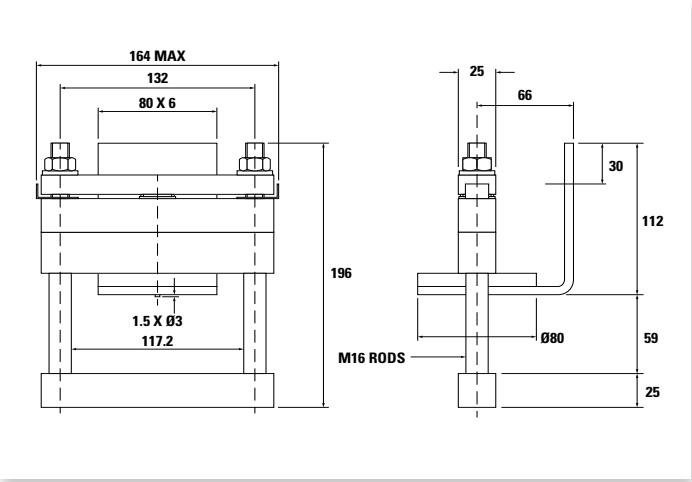

WC33 - XK2500DA116M/ML

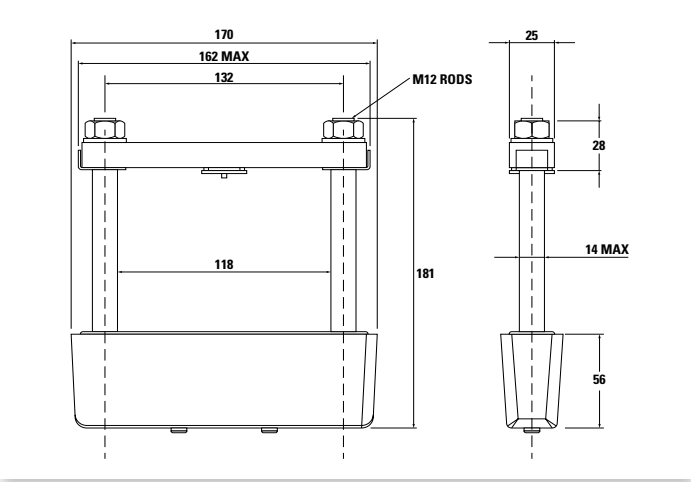

Outline Drawings

WC34 - XK3000SA116M/ML

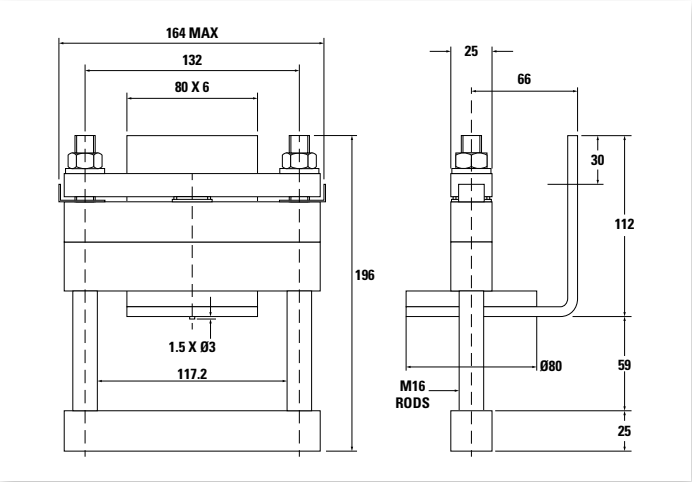

WC35 - XK3000DA116M/Mx

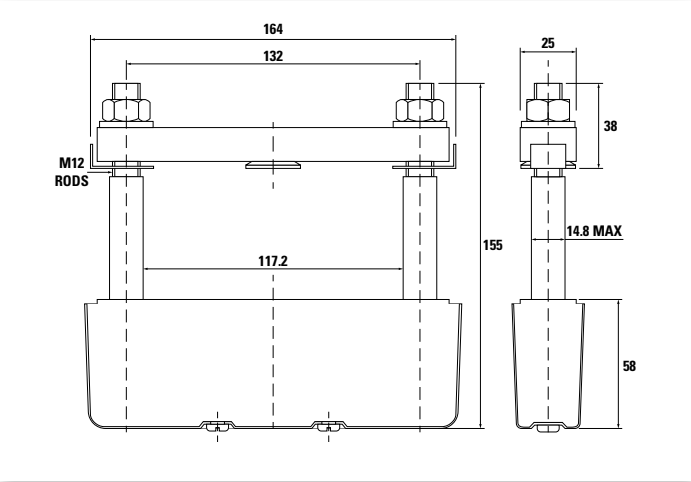

WC36 - XK3500SA116M/ML

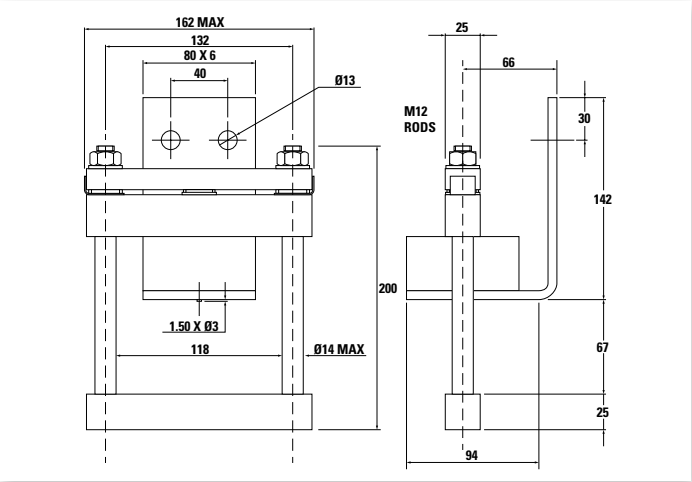

WC37 - XK3500DA116M/ML

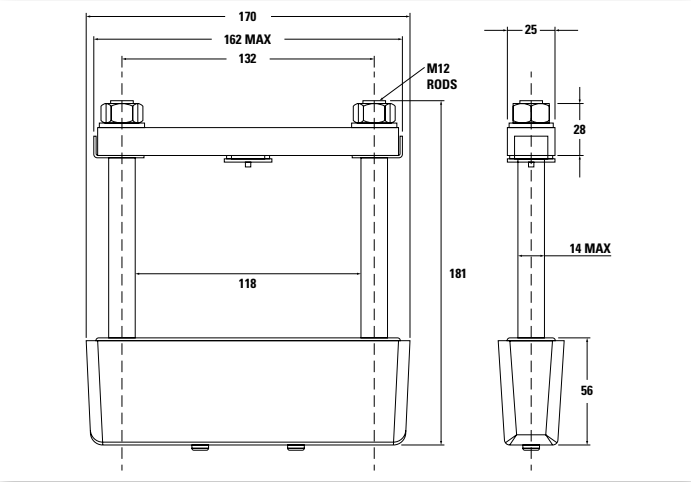

WC38 - XK4000SA116M/ML

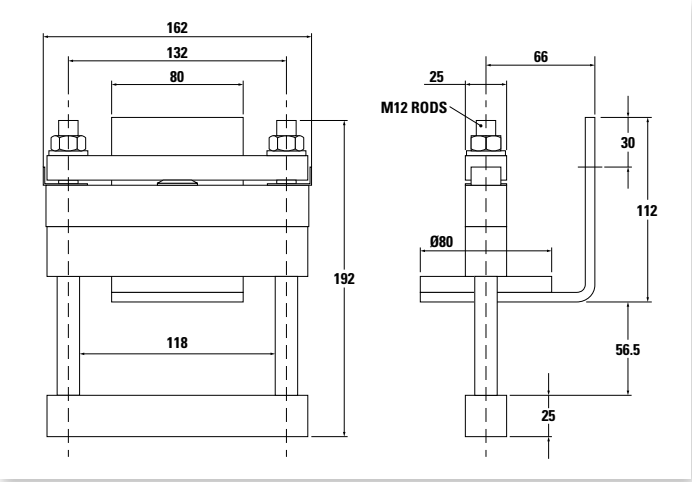

WC39 - XK4000DA116M/ML

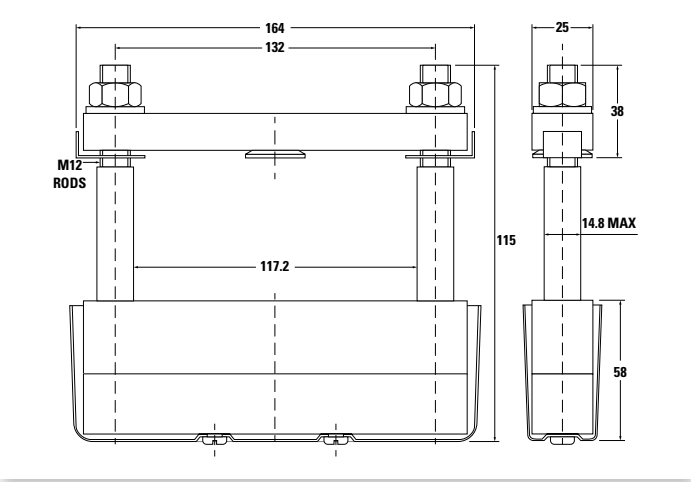

©2023 Littelfuse, Inc

WC40 - XK5000DA128M/ML

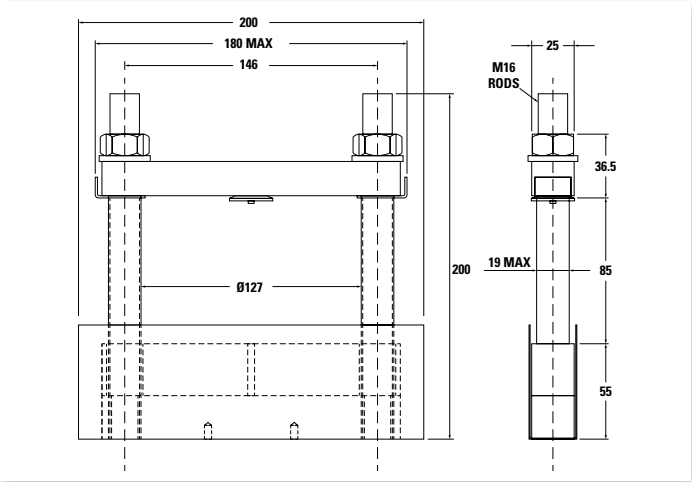

WC41 - XK7000DA128M/ML

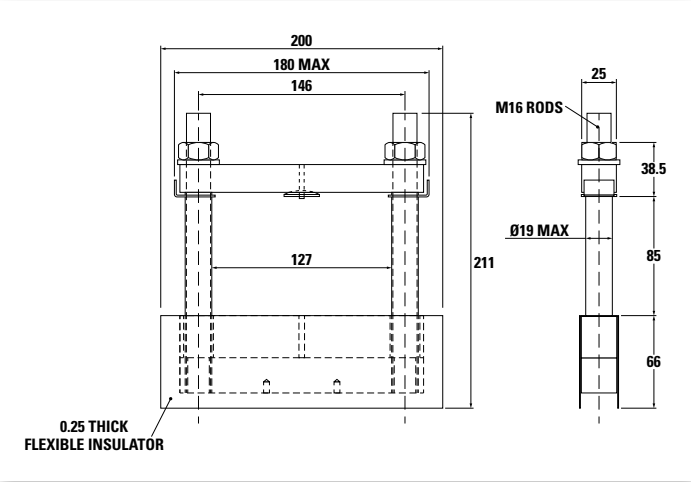

WC42 - XK3060SA140ML

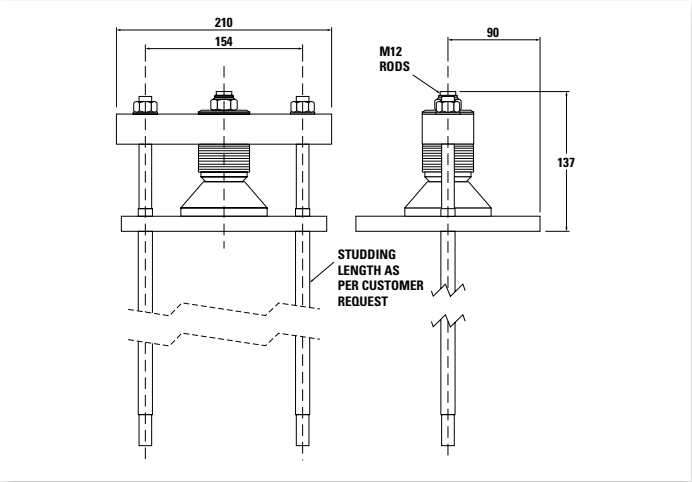

WC43 - XK3060DA140ML

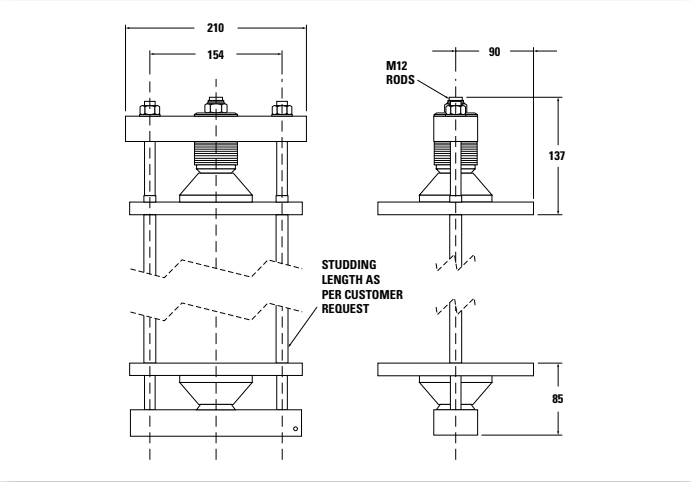

WC44 - XK9000SA160M/ML

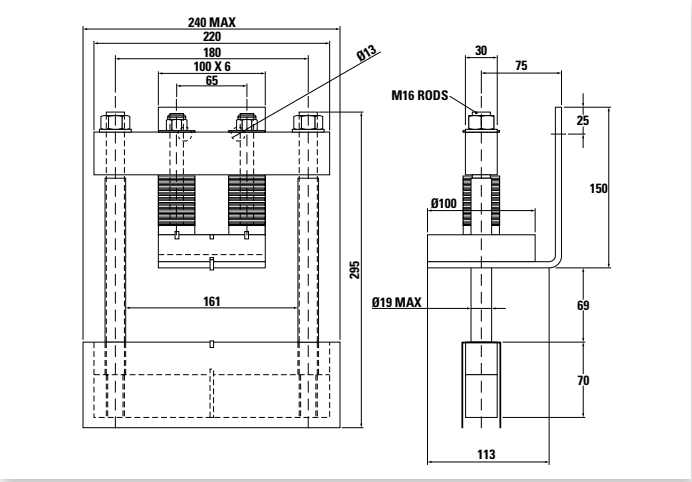

WC45 - XK9000DA160M/ML

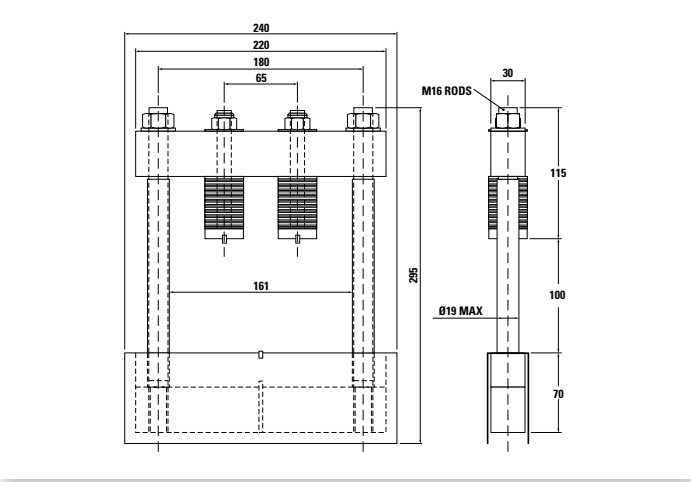

WC46 - XK6120DA180ML

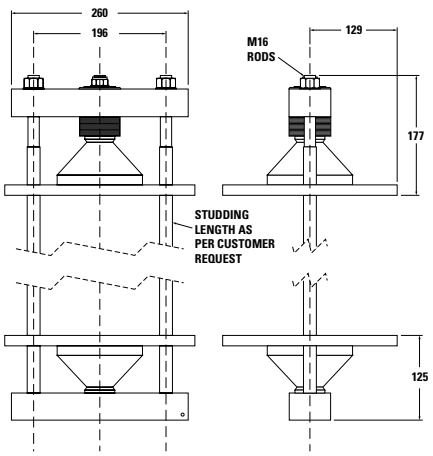

WC47 - XK6120SA180ML

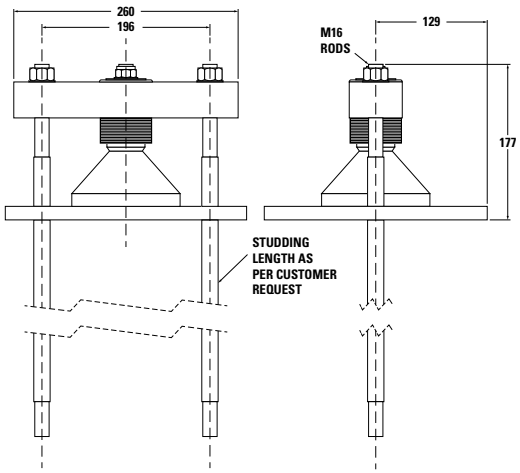

WC48 - XK0450xx019M

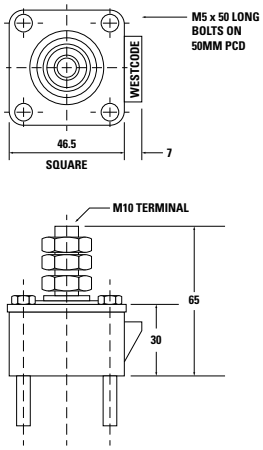

WC49 - XK####xx025M

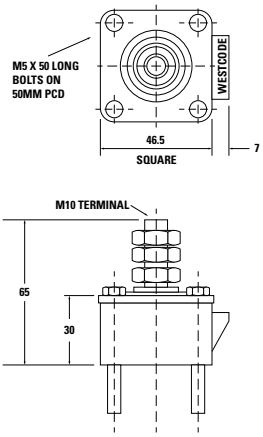

WC50 - XK1500BA034M

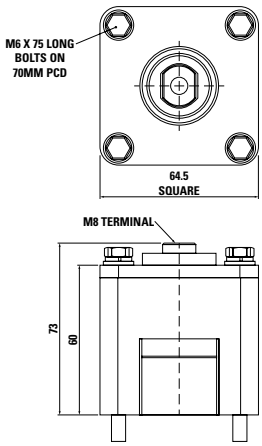

WC51 - XSK1500DA076xxx

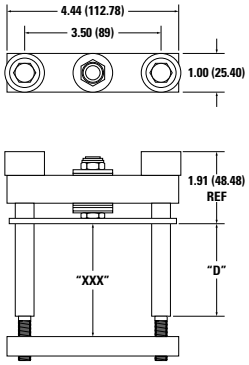

Notes:

1. DIMENSIONS IN INCHES (MILLIMETERS).
2. "Z" DIMENSION CAN BE CHANGED AS PER REQUIREMENT.
3. "D" DIMENSION CAN BE CHANGED AS PER REQUIREMENT.

©2023 Littelfuse, Inc

WC52 - XSK2000DA076xxx

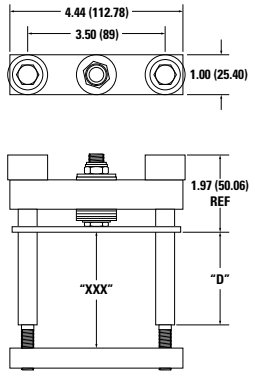

Notes:

1. DIMENSIONS IN INCHES (MILLIMETERS).
2. "Z" DIMENSION CAN BE CHANGED AS PER REQUIREMENT.
3. "D" DIMENSION CAN BE CHANGED AS PER REQUIREMENT.

WC53 - XSK3000DA076xxx

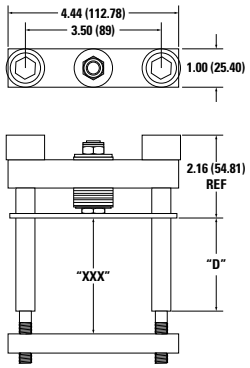

Notes:

1. DIMENSIONS IN INCHES (MILLIMETERS).
2. "Z" DIMENSION CAN BE CHANGED AS PER REQUIREMENT.
3. "D" DIMENSION CAN BE CHANGED AS PER REQUIREMENT.

WC54 - XSK3400DA076xxx

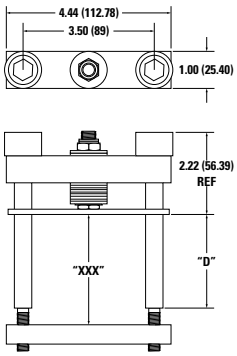

Notes:

1. DIMENSIONS IN INCHES (MILLIMETERS).
2. "Z" DIMENSION CAN BE CHANGED AS PER REQUIREMENT.
3. "D" DIMENSION CAN BE CHANGED AS PER REQUIREMENT.

WC55 - SK3800DA116Mxxx

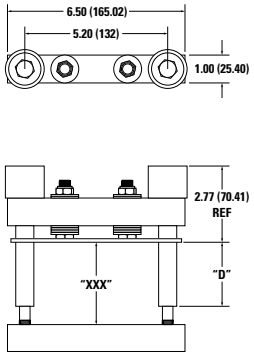

Notes:

1. DIMENSIONS IN INCHES (MILLIMETERS).
2. "Z" DIMENSIONS CAN BE CHANGED AS PER REQUIREMENT.
3. "D" DIMENSION CAN BE CHANGED AS PER REQUIREMENT.

WC56 - XSK4400DA116Mxxx

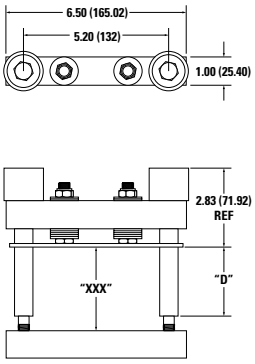

Notes:

1. DIMENSIONS IN INCHES (MILLIMETERS).
2. "Z" DIMENSION CAN BE CHANGED AS PER REQUIREMENT.
3. "D" DIMENSION CAN BE CHANGED AS PER REQUIREMENT.

WC57 - XSK6000DA116Mxxx

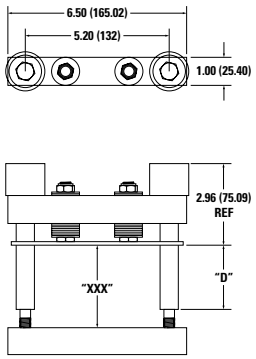

Notes:

1. DIMENSIONS IN INCHES (MILLIMETERS).
2. "Z" DIMENSION CAN BE CHANGED AS PER REQUIREMENT.
3. "D" DIMENSION CAN BE CHANGED AS PER REQUIREMENT.

Outline Drawings

WC58- DA

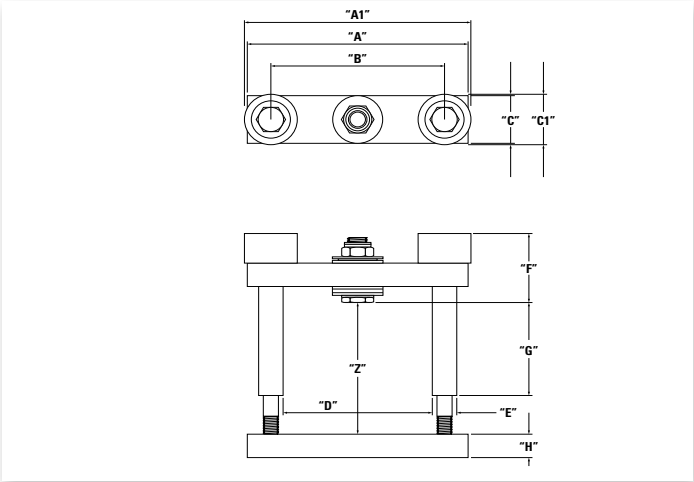

WC59 - DT

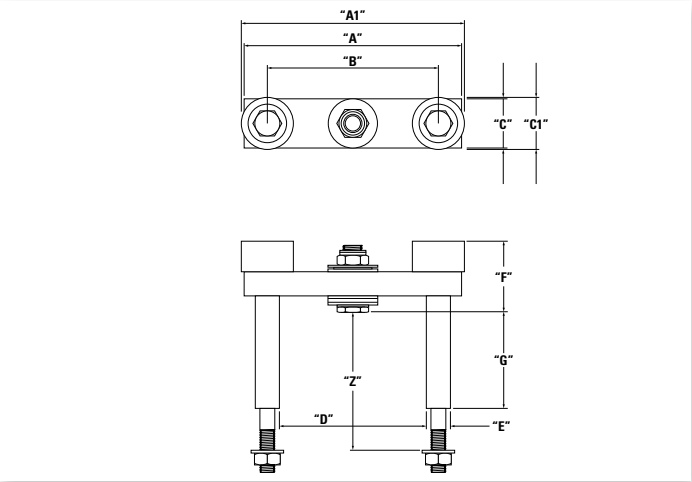

WC60 - DF

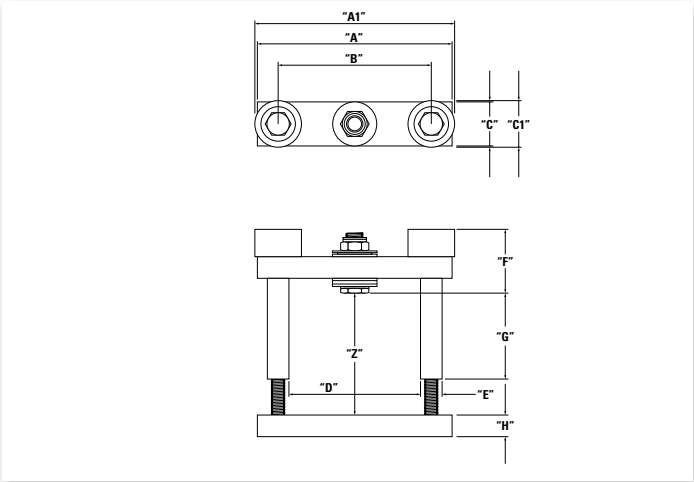

WC61 - DA

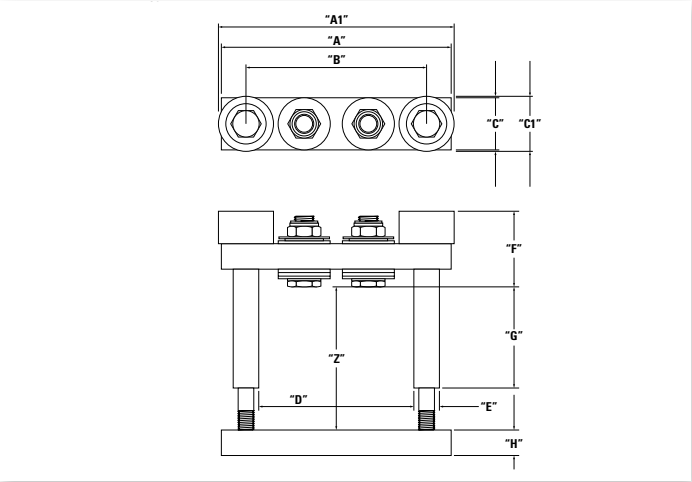

WC62 - DT

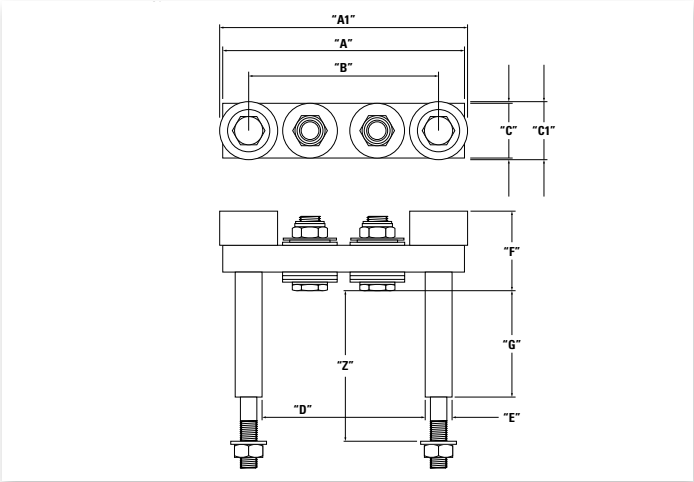

WC63 - DF

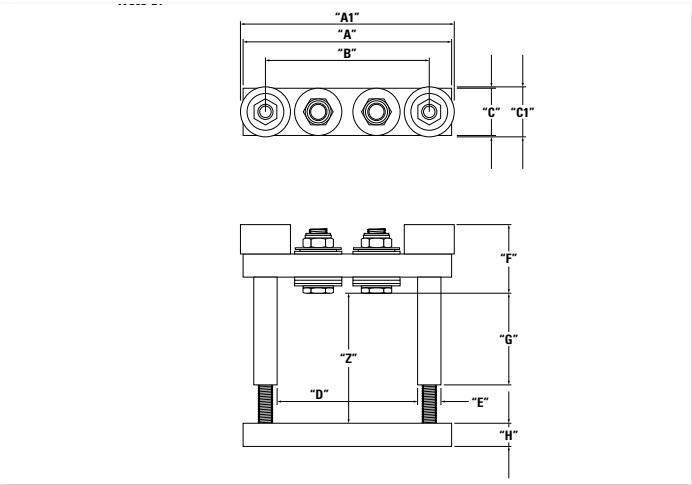

©2023 Littelfuse, Inc

WC64 - XK1500CB034M

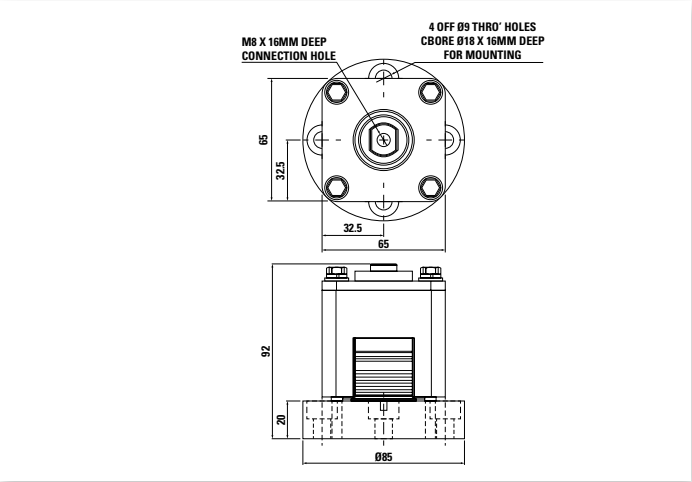

WC65 - XK1130SB076M

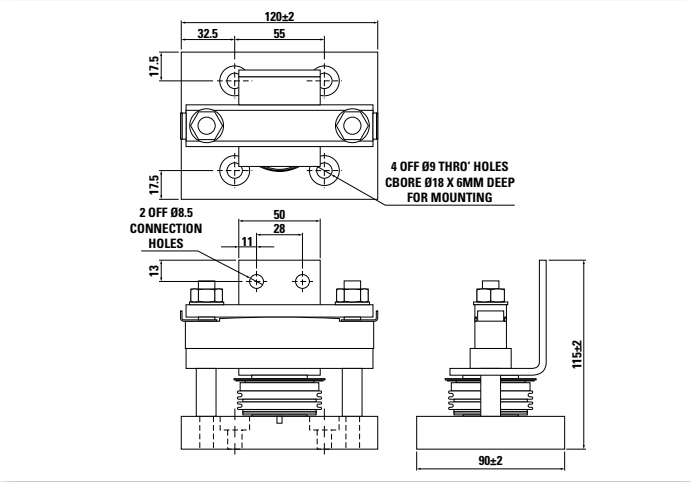

WC66 - XK2140SB076M

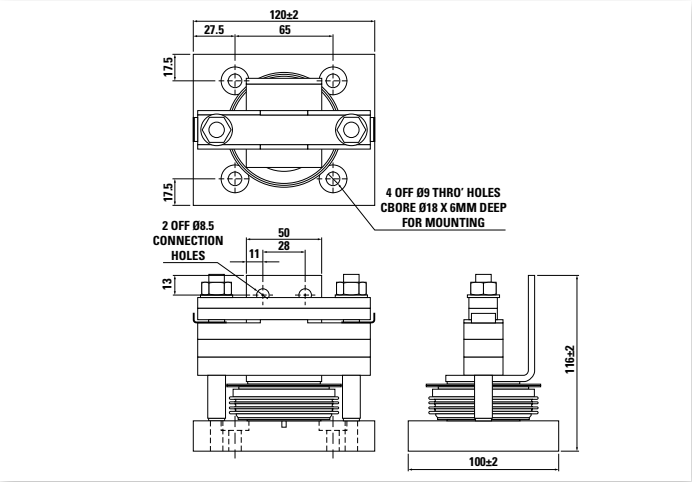

WC67 - XK8000DA180ML

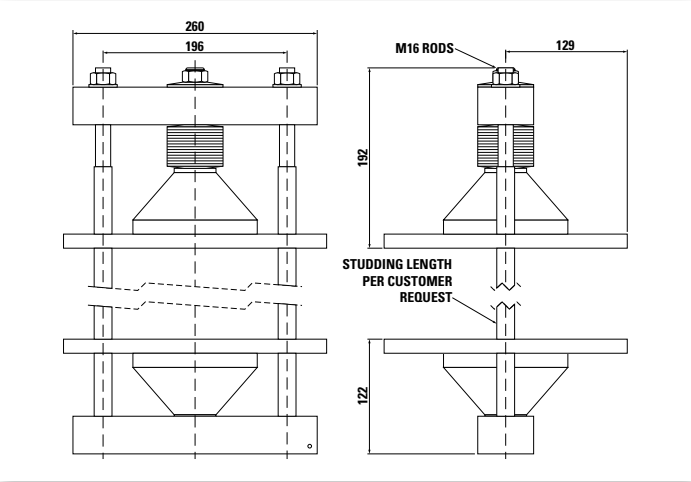

WC68 - XK8000SA180ML

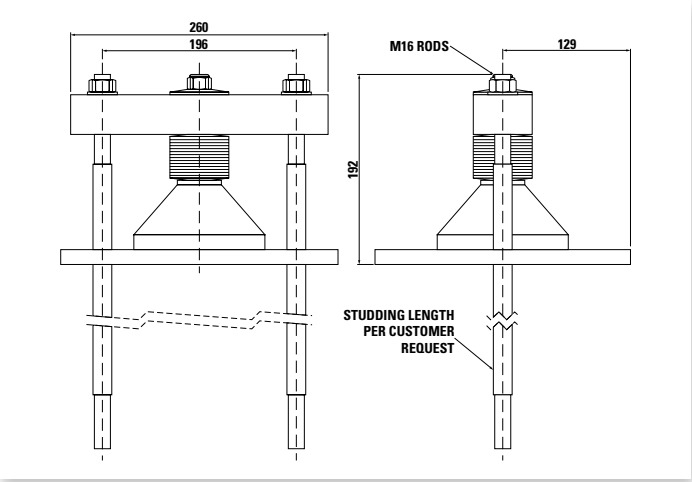

WH1 - G FIN

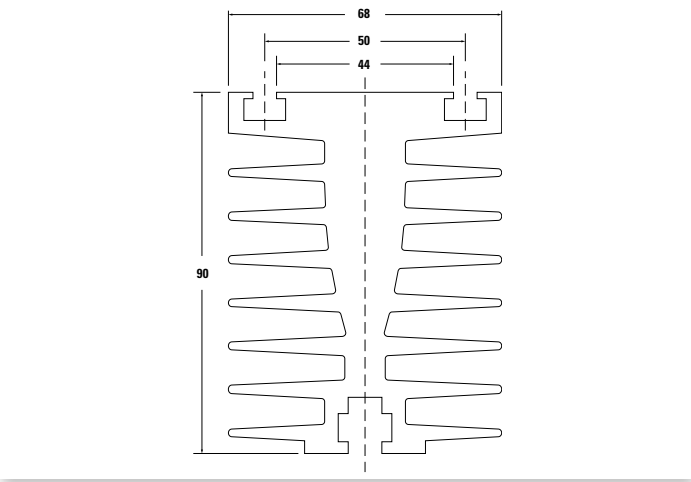

Outline Drawings

WH2 - GA FIN

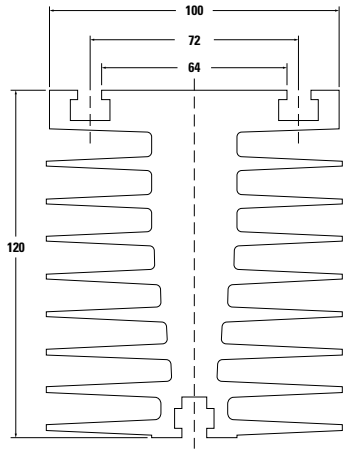

WH3 - H FIN

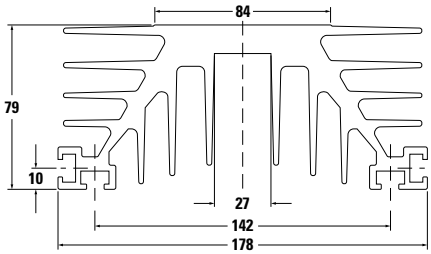

WH4 - T FIN

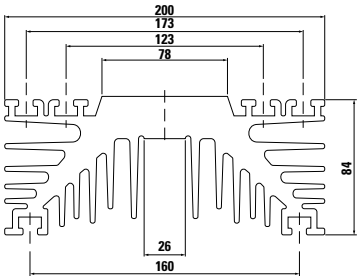

WH5 - TB FIN

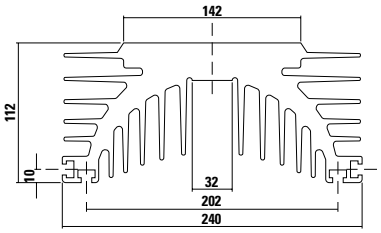

WH6 - TC FIN

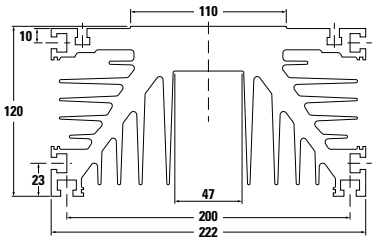

WH7 - LP100

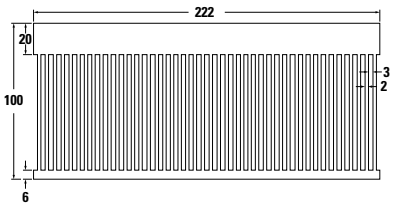

WH8 - WS46

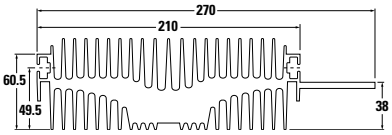

WH9 - WS30 - COPPER

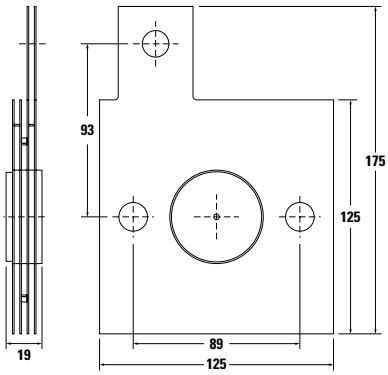

©2023 Littelfuse, Inc

WCL1 - LK COOLER

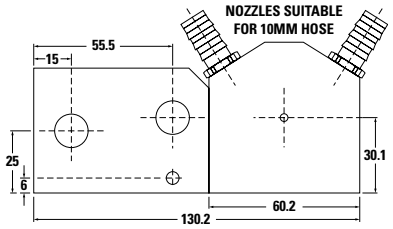

WCL2 - LKA COOLER

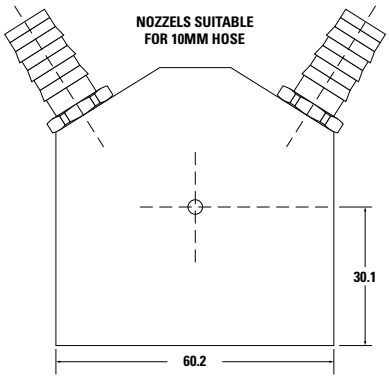

WCL3 - LKB COOLER

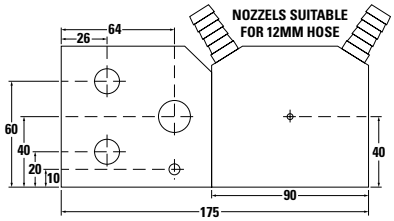

WCL4 - LKC COOLER

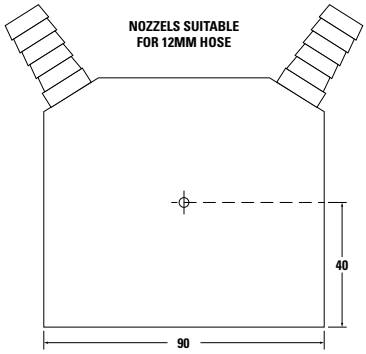

WCL5 - LKD COOLER

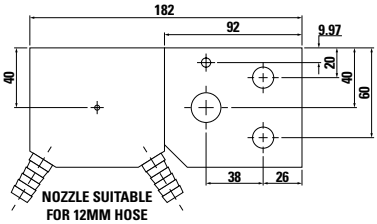

WCL6 - LKE COOLER

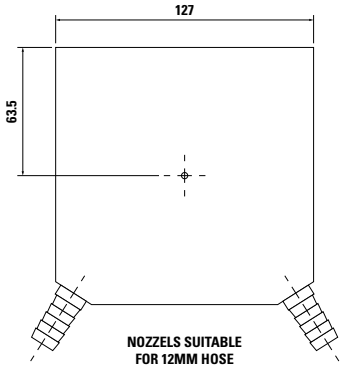

WCL7 - LKF

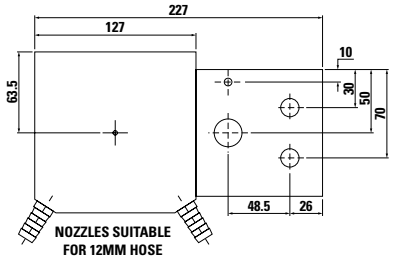

WCL8 - WS27

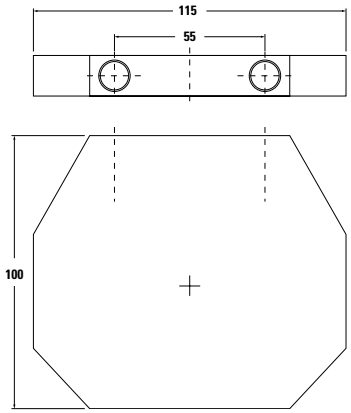

WCL9 - WS65 COOLER

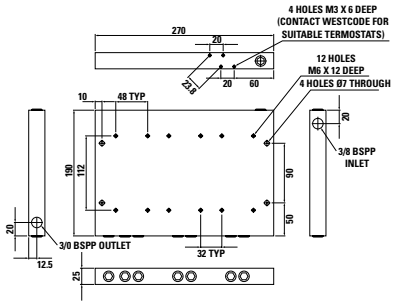

Outline Drawings

WCL10 - WS69 COOLER

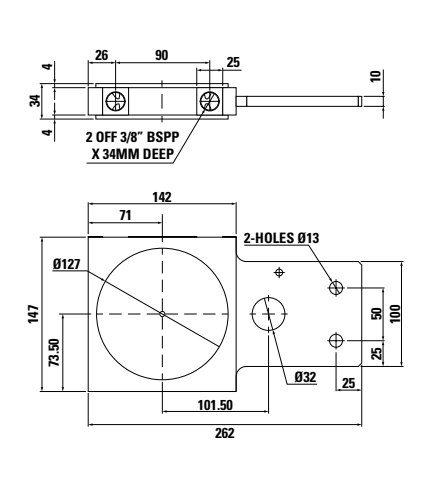

WCL11 - WS70 COOLER

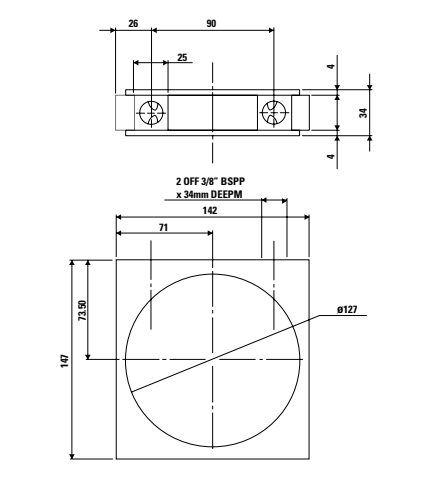

WCL12 - WS71-1 COOLER

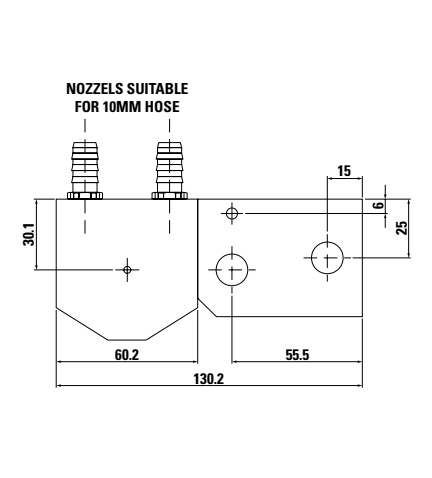

WCL13 - WS71-2 COOLER

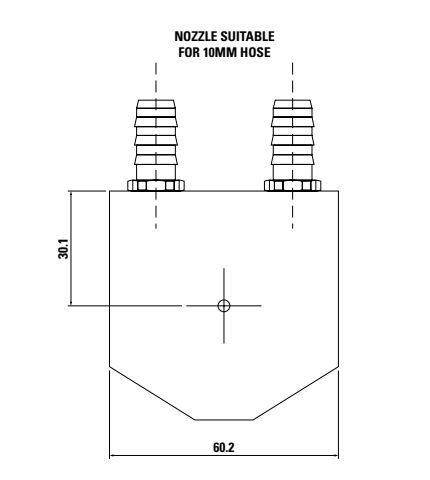

WCL14 - WS72-1 COOLER

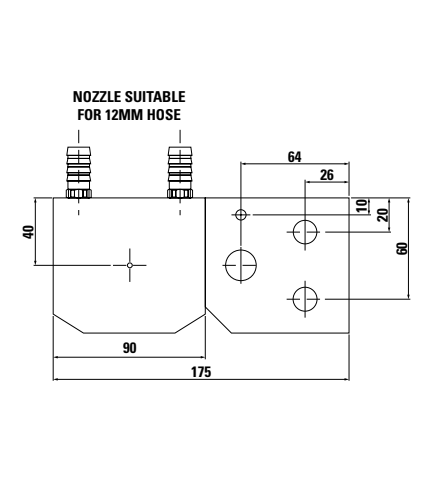

WCL15 - WS72-2 COOLER

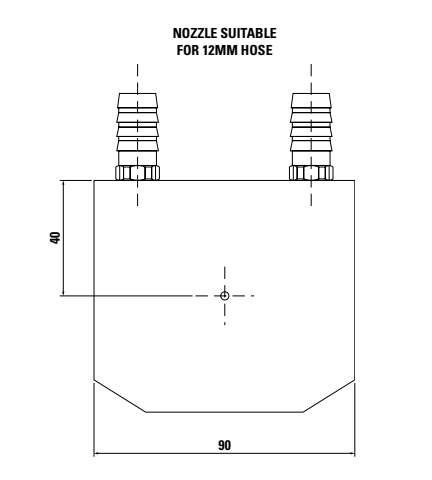

WCL16 - XW127ExxxA

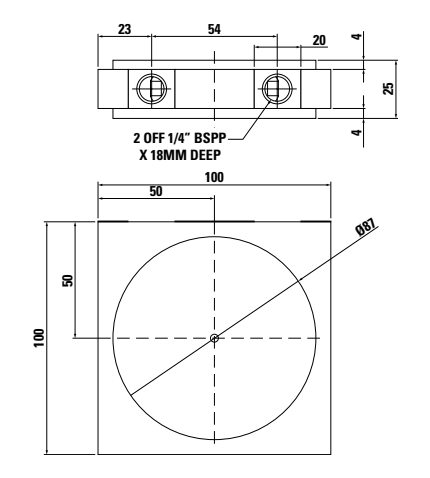

WCL17 - XW127ExxxB

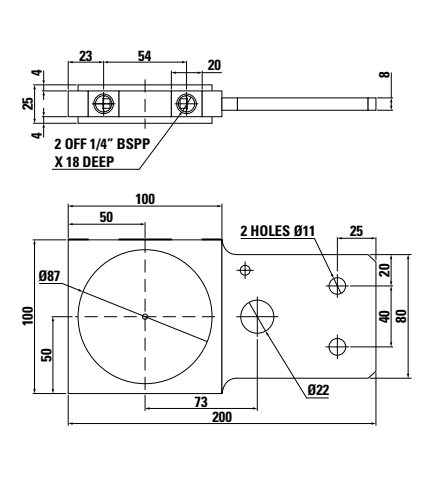

WCL18 - XW180GN25A

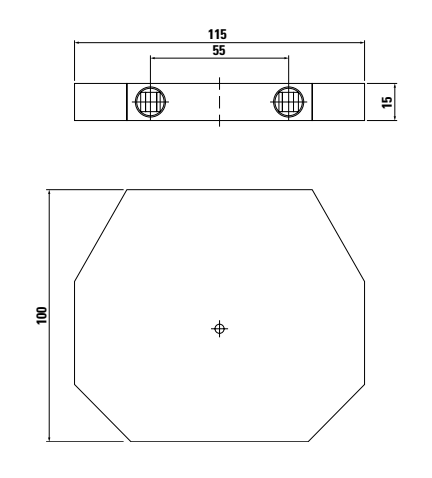

©2023 Littelfuse, Inc

WCL19 - XW180BxxxE

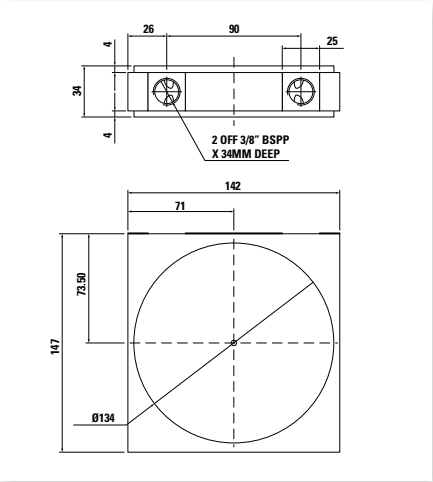

WCL20 - XW180BxxxF

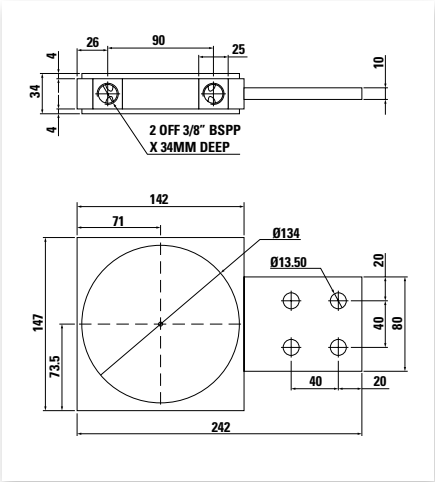

Outline Drawings

X003 TO-251 AA
Weight = 0.4 g

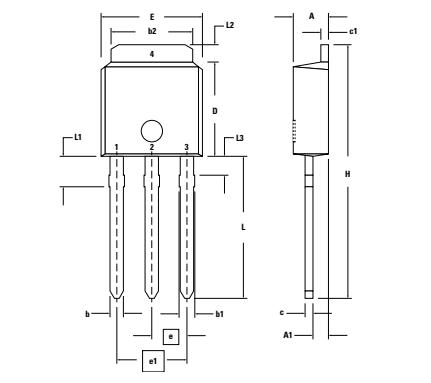

Dim	Millimeters		Inches	
	min	max	min	max
A	2.19	2.38	0.086	0.094
A1	0.89	1.14	0.035	0.045
b	0.64	0.89	0.025	0.035
b1	0.76	1.14	0.030	0.045
b2	5.21	5.46	0.205	0.215
c	0.46	0.58	0.018	0.023
c1	0.46	0.58	0.018	0.023
D	5.97	6.22	0.235	0.245
E	6.35	6.73	0.250	0.265
e	2.28 BSC		0.090 BSC	
e1	4.57 BSC		0.180 BSC	
H	17.02	17.78	0.670	0.700
L	8.89	9.65	0.350	0.380
L1	1.91	2.28	0.075	0.090
L2	0.89	1.27	0.035	0.050
L3	1.15	1.52	0.045	0.060

X004 TO-252 AA (D PAK)
Weight = 0.3 g

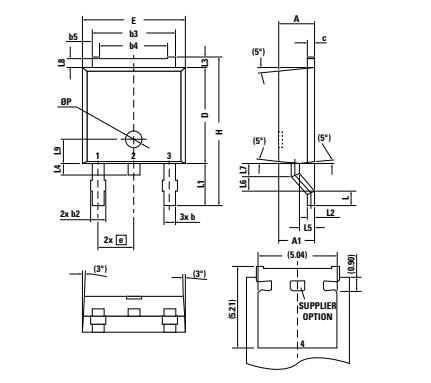

Dim	Millimeters		Inches	
	min	max	min	max
A	2.20	2.40	0.087	0.094
A1	2.10	2.50	0.083	0.098
b	0.66	0.86	0.026	0.034
b2	-	0.96	-	0.038
b3	5.04	5.64	0.198	0.222
b4	4.34 BSC		0.171 BSC	
b5	0.50 BSC		0.020 BSC	
c	0.40	0.60	0.016	0.024
D	5.90	6.30	0.232	0.248
E	6.40	6.80	0.252	0.268
e	2.10	2.50	0.083	0.098
H	9.20	9.80	0.362	0.386
L	0.55	1.02	0.022	0.040
L1	2.50	2.90	0.098	0.114
L2	0.40	0.60	0.016	0.024
L3	0.50	0.90	0.020	0.035
L4	0.60	1.00	0.024	0.039
L5	0.82	1.22	0.032	0.048
L6	0.79	0.99	0.031	0.039
L7	0.81	1.01	0.032	0.040
L8	0.40	0.80	0.016	0.031
L9	1.50 BSC		0.059 BSC	
Ø P	1.00 BSC		0.039 BSC	

X004a TO-252 AA (D PAK HV)
Weight = 0.3 g

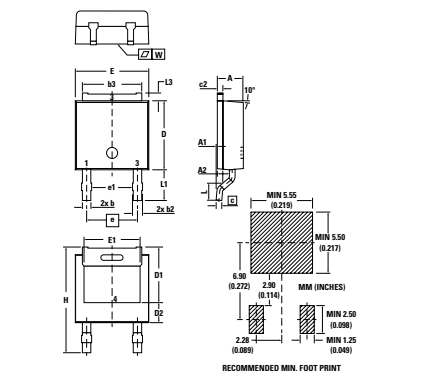

Dim	Millimeters		Inches	
	min	max	min	max
A	2.18	2.39	0.086	0.094
A1	0.00	0.13	0.000	0.005
A2	0.97	1.17	0.038	0.046
b	0.64	0.89	0.025	0.035
b2	0.76	1.14	0.030	0.045
b3	5.08	5.59	0.200	0.220
c	0.46	0.61	0.018	0.024
c2	0.46	0.58	0.018	0.023
D	5.97	6.22	0.235	0.245
D1	4.57	5.21	0.180	0.205
D2	2.03		0.080	
E	6.35	6.73	0.250	0.265
E1	4.32	5.21	0.170	0.205
e	4.57		0.180	
e1	3.62		0.143	
H	9.15	10.34	0.360	0.407
L	1.40	1.78	0.055	0.070
L1	2.54	2.92	0.100	0.115
L3	0.64	1.02	0.025	0.040
W	typ. 0.02	0.040	typ. 0.0008	0.000

X005a TO-220 AB
Weight = 2 g

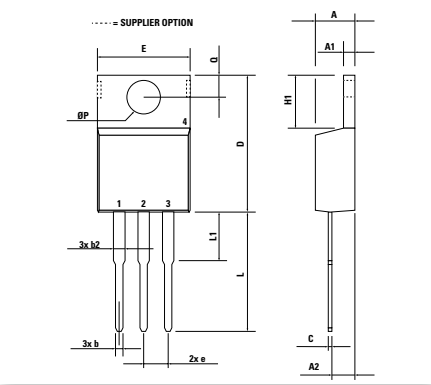

Dim	Millimeters		Inches	
	min	max	min	max
A	4.32	4.82	0.170	0.190
A1	1.14	1.39	0.045	0.055
A2	2.29	2.79	0.090	0.110
b	0.64	1.01	0.025	0.040
b2	1.15	1.65	0.045	0.065
C	0.35	0.56	0.014	0.022
D	14.73	16.00	0.580	0.630
E	9.91	10.66	0.390	0.420
e	2.54 BSC		0.100 BSC	
H1	5.85	6.85	0.230	0.270
L	12.70	13.97	0.500	0.550
L1	2.79	5.84	0.110	0.230
Ø P	3.54	4.08	0.139	0.161
Q	2.54	3.18	0.100	0.125

X005b TO-220 AC
Weight = 2 g

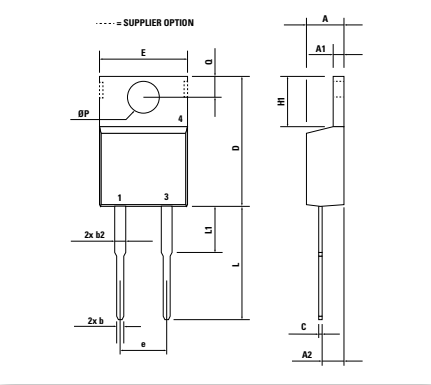

Dim	Millimeters		Inches	
	min	max	min	max
A	4.32	4.82	0.170	0.190
A1	1.14	1.39	0.045	0.055
A2	2.29	2.79	0.090	0.110
b	0.64	1.01	0.025	0.040
b2	1.15	1.65	0.045	0.065
C	0.35	0.56	0.014	0.022
D	14.73	16.00	0.580	0.630
E	9.91	10.66	0.390	0.420
e	5.08 BSC		0.200 BSC	
H1	5.85	6.85	0.230	0.270
L	12.70	13.97	0.500	0.550
L1	2.79	5.84	0.110	0.230
Ø P	3.54	4.08	0.139	0.161
Q	2.54	3.18	0.100	0.125

X006 TO-220 (5)
Weight = 2 g

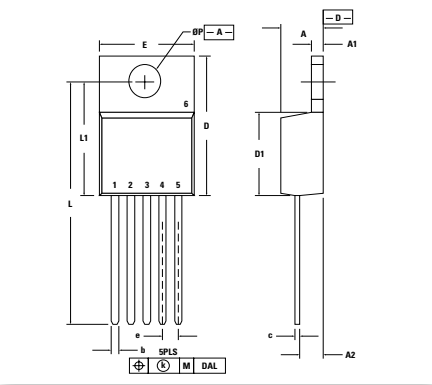

Dim	Millimeters		Inches	
	min	max	min	max
A	4.32	4.82	0.170	0.190
A1	1.14	1.39	0.045	0.055
A2	2.29	2.79	0.090	0.110
b	0.64	1.01	0.025	0.040
c	0.38	0.64	0.015	0.025
D	14.73	15.75	0.580	0.620
D1	8.64	9.40	0.340	0.370
E	9.91	10.54	0.390	0.415
e	1.70 BSC		0.067 BSC	
k	0.00	0.36	0.000	0.014
L	25.27	26.54	0.995	1.045
L1	11.94	12.95	0.470	0.510
Ø P	3.53	3.96	0.139	0.156

©2023 Littelfuse, Inc

X007a TO-220 ABFP
Weight = 2 g

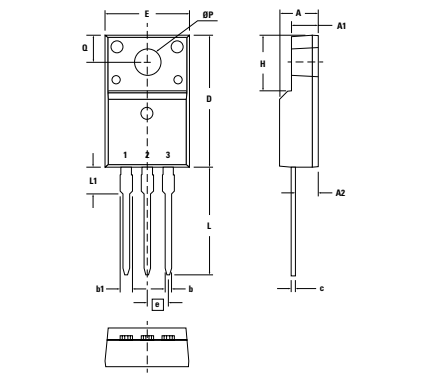

Dim	Millimeters		Inches	
	min	max	min	max
A	4.50	4.90	0.177	0.193
A1	2.34	2.74	0.092	0.108
A2	2.56	2.96	0.101	0.117
b	0.70	0.90	0.028	0.035
b1	1.27	1.47	0.050	0.058
c	0.45	0.60	0.018	0.024
D	15.67	16.07	0.617	0.633
E	9.96	10.36	0.392	0.408
e	2.54 BSC		0.100 BSC	
H	6.48	6.88	0.255	0.271
L	12.68	13.28	0.499	0.523
L1	3.03	3.43	0.119	0.135
Ø P	3.08	3.28	0.121	0.129
Q	3.20	3.40	0.126	0.134

X007b TO-220 ACFP
Weight = 2 g

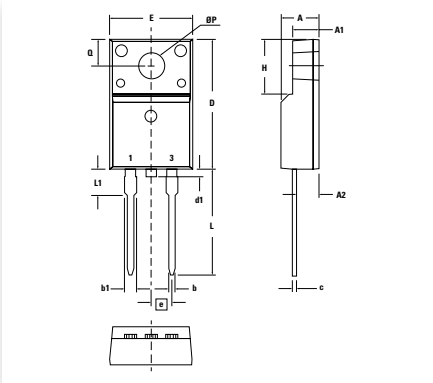

Dim	Millimeters		Inches	
	min	max	min	max
A	4.50	4.90	0.177	0.193
A1	2.34	2.74	0.092	0.108
A2	2.56	2.96	0.101	0.117
b	0.70	0.90	0.028	0.035
b1	1.27	1.47	0.050	0.058
c	0.45	0.60	0.018	0.024
D	15.67	16.07	0.617	0.633
d1	0.00	1.10	0.000	0.043
E	9.96	10.36	0.392	0.408
e	2.54 BSC		0.100 BSC	
H	6.48	6.88	0.255	0.271
L	12.68	13.28	0.499	0.523
L1	3.03	3.43	0.119	0.135
Ø P	3.08	3.28	0.121	0.129
Q	3.20	3.40	0.126	0.134

X008a TO-262 I2PAK
Weight = 1.5 g

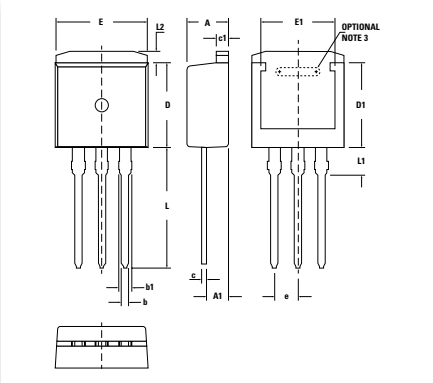

Dim	Millimeters		Inches	
	min	max	min	max
A	4.30	4.70	0.169	0.185
A1	2.20	2.60	0.087	0.102
b	0.70	0.90	0.028	0.035
b1	1.37	1.57	0.054	0.062
c	0.45	0.60	0.018	0.024
c1	1.25	1.40	0.049	0.055
D	9.00	9.40	0.355	0.370
D1	7.20		0.284	
E	9.70	9.90	0.382	0.390
E1	7.00		0.276	
e	2.54 BSC		0.100 BSC	
L	12.88	13.28	0.507	0.523
L1	3.00	–	0.118	–
L2	1.00	1.40	0.039	0.055

X008b TO-262 I2PAK
Weight = 1.5 g

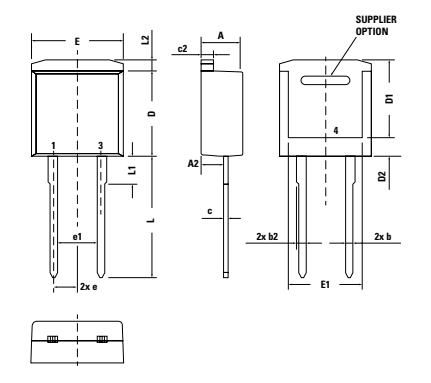

Dim	Millimeters		Inches	
	min	max	min	max
A	4.06	4.83	0.160	0.190
A2	2.41		0.095	
b	0.51	0.99	0.020	0.039
b2	1.14	1.40	0.045	0.055
c	0.40	0.74	0.016	0.029
c2	1.14	1.40	0.045	0.055
D	8.38	9.40	0.330	0.370
D1	8.00	8.89	0.315	0.350
D2	2.5		0.098	
E	9.65	10.41	0.380	0.410
E1	6.22	8.50	0.245	0.335
e	2.54 BSC		0.100 BSC	
e1	4.28		0.169	
L	13.00	13.60	0.512	0.535
L1	2.90	3.10	0.114	0.122
L2	1.02	1.68	0.040	0.066

X009a PLUS220TM
Weight = 2.5 g b) middle leg cut

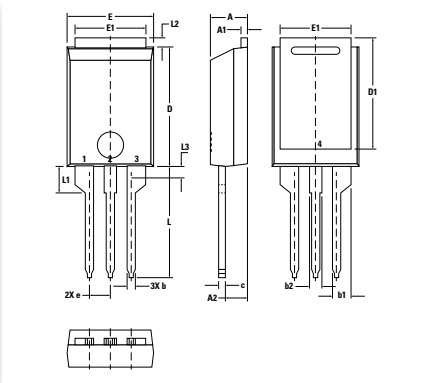

Dim	Millimeters		Inches	
	min	max	min	max
A	4.30	4.70	0.169	0.185
A1	0.70	0.90	0.028	0.035
A2	2.50	3.00	0.098	0.118
b	0.90	1.20	0.035	0.047
b1	2.03	2.41	0.080	0.095
b2	1.37	1.63	0.054	0.064
c	0.70	0.90	0.028	0.035
D	14.00	15.00	0.551	0.591
D1	13.00	13.70	0.512	0.539
E	10.00	11.00	0.394	0.433
E1	8.40	8.80	0.331	0.346
e	2.54 BSC		0.100 BSC	
L	13.00	14.00	0.512	0.551
L1	3.00	3.50	0.118	0.138
L2	0.90	1.30	0.035	0.051
L3	1.20	1.50	0.047	0.059

X010a ISOPLUS220TM AB
Weight = 2.5 g

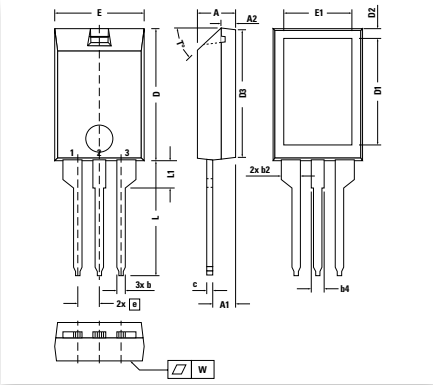

Dim	Millimeters		Inches	
	min	max	min	max
A	4.00	5.00	0.157	0.197
A1	2.50	3.00	0.098	0.118
A2	1.60	1.80	0.063	0.071
b	0.90	1.30	0.035	0.051
b2	2.35	2.55	0.093	0.100
b4	1.25	1.65	0.049	0.065
c	0.70	1.00	0.028	0.039
D	15.00	16.00	0.591	0.630
D1	12.00	13.00	0.472	0.512
D2	1.10	1.50	0.043	0.059
D3	14.90	15.50	0.587	0.610
E	10.00	11.00	0.394	0.433
E1	7.50	8.50	0.295	0.335
e	2.54	BSC	0.100	BSC
L	13.00	14.50	0.512	0.571
L1	3.00	3.50	0.118	0.138
T°	42.5	47.5	–	–
W	–	0.10	–	0.004

Outline Drawings

X003 TO-251 AA
Weight = 0.4 g

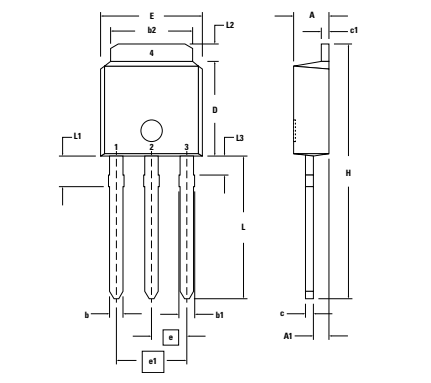

Dim	Millimeters		Inches	
	min	max	min	max
A	2.19	2.38	0.086	0.094
A1	0.89	1.14	0.035	0.045
b	0.64	0.89	0.025	0.035
b1	0.76	1.14	0.030	0.045
b2	5.21	5.46	0.205	0.215
c	0.46	0.58	0.018	0.023
c1	0.46	0.58	0.018	0.023
D	5.97	6.22	0.235	0.245
E	6.35	6.73	0.250	0.265
e	2.28 BSC		0.090 BSC	
e1	4.57 BSC		0.180 BSC	
H	17.02	17.78	0.670	0.700
L	8.89	9.65	0.350	0.380
L1	1.91	2.28	0.075	0.090
L2	0.89	1.27	0.035	0.050
L3	1.15	1.52	0.045	0.060

X004 TO-252 AA (D PAK)
Weight = 0.3 g

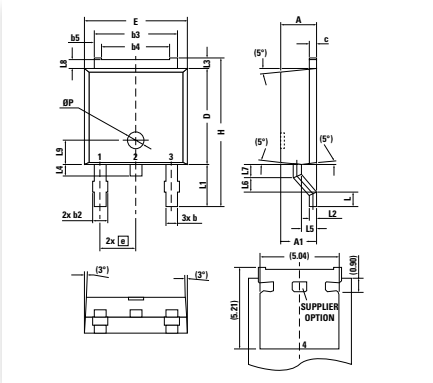

Dim	Millimeters		Inches	
	min	max	min	max
A	2.20	2.40	0.087	0.094
A1	2.10	2.50	0.083	0.098
b	0.66	0.86	0.026	0.034
b2	–	0.96	–	0.038
b3	5.04	5.64	0.198	0.222
b4	4.34 BSC		0.171 BSC	
b5	0.50 BSC		0.020 BSC	
c	0.40	0.60	0.016	0.024
D	5.90	6.30	0.232	0.248
E	6.40	6.80	0.252	0.268
e	2.10	2.50	0.083	0.098
H	9.20	9.80	0.362	0.386
L	0.55	1.02	0.022	0.040
L1	2.50	2.90	0.098	0.114
L2	0.40	0.60	0.016	0.024
L3	0.50	0.90	0.020	0.035
L4	0.60	1.00	0.024	0.039
L5	0.82	1.22	0.032	0.048
L6	0.79	0.99	0.031	0.039
L7	0.81	1.01	0.032	0.040
L8	0.40	0.80	0.016	0.031
L9	1.50 BSC		0.059 BSC	
Ø P	1.00 BSC		0.039 BSC	

X004a TO-252 AA (D PAK HV)
Weight = 0.3 g

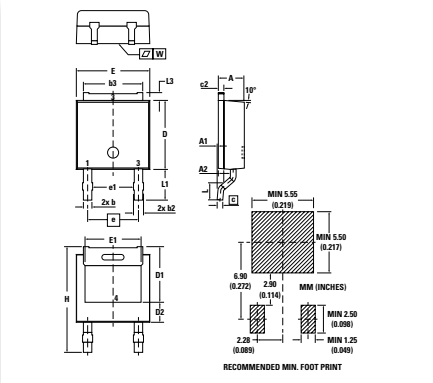

Dim	Millimeters		Inches	
	min	max	min	max
A	2.18	2.39	0.086	0.094
A1	0.00	0.13	0.000	0.005
A2	0.97	1.17	0.038	0.046
b	0.64	0.89	0.025	0.035
b2	0.76	1.14	0.030	0.045
b3	5.08	5.59	0.200	0.220
c	0.46	0.61	0.018	0.024
c2	0.46	0.58	0.018	0.023
D	5.97	6.22	0.235	0.245
D1	4.57	5.21	0.180	0.205
D2	2.03		0.080	
E	6.35	6.73	0.250	0.265
E1	4.32	5.21	0.170	0.205
e	4.57		0.180	
e1	3.62		0.143	
H	9.15	10.34	0.360	0.407
L	1.40	1.78	0.055	0.070
L1	2.54	2.92	0.100	0.115
L3	0.64	1.02	0.025	0.040
W	typ. 0.02	0.040	typ. 0.0008	0.000

X005a TO-220 AB
Weight = 2 g

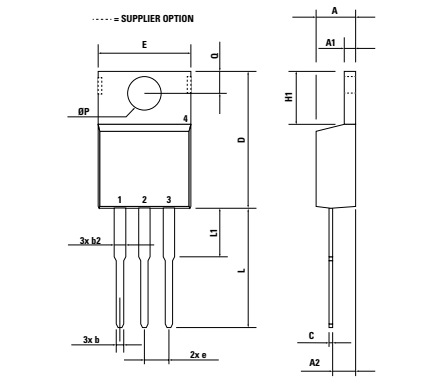

Dim	Millimeters		Inches	
	min	max	min	max
A	4.32	4.82	0.170	0.190
A1	1.14	1.39	0.045	0.055
A2	2.29	2.79	0.090	0.110
b	0.64	1.01	0.025	0.040
b2	1.15	1.65	0.045	0.065
C	0.35	0.56	0.014	0.022
D	14.73	16.00	0.580	0.630
E	9.91	10.66	0.390	0.420
e	2.54 BSC		0.100 BSC	
H1	5.85	6.85	0.230	0.270
L	12.70	13.97	0.500	0.550
L1	2.79	5.84	0.110	0.230
Ø P	3.54	4.08	0.139	0.161
Q	2.54	3.18	0.100	0.125

X005b TO-220 AC
Weight = 2 g

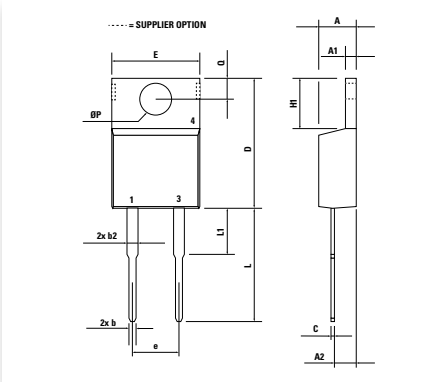

Dim	Millimeters		Inches	
	min	max	min	max
A	4.32	4.82	0.170	0.190
A1	1.14	1.39	0.045	0.055
A2	2.29	2.79	0.090	0.110
b	0.64	1.01	0.025	0.040
b2	1.15	1.65	0.045	0.065
C	0.35	0.56	0.014	0.022
D	14.73	16.00	0.580	0.630
E	9.91	10.66	0.390	0.420
e	5.08 BSC		0.200 BSC	
H1	5.85	6.85	0.230	0.270
L	12.70	13.97	0.500	0.550
L1	2.79	5.84	0.110	0.230
Ø P	3.54	4.08	0.139	0.161
Q	2.54	3.18	0.100	0.125

X006 TO-220 (5)
Weight = 2 g

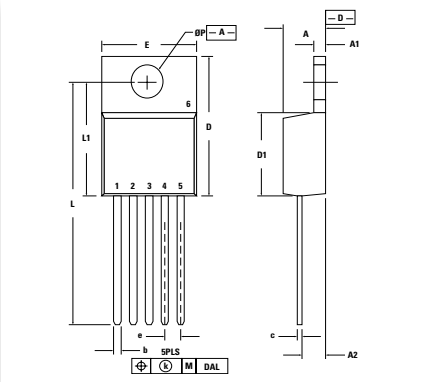

Dim	Millimeters		Inches	
	min	max	min	max
A	4.32	4.82	0.170	0.190
A1	1.14	1.39	0.045	0.055
A2	2.29	2.79	0.090	0.110
b	0.64	1.01	0.025	0.040
c	0.38	0.64	0.015	0.025
D	14.73	15.75	0.580	0.620
D1	8.64	9.40	0.340	0.370
E	9.91	10.54	0.390	0.415
e	1.70 BSC		0.067 BSC	
k	0.00	0.36	0.000	0.014
L	25.27	26.54	0.995	1.045
L1	11.94	12.95	0.470	0.510
Ø P	3.53	3.96	0.139	0.156

©2023 Littelfuse, Inc

X007a TO-220 ABFP
Weight = 2 g

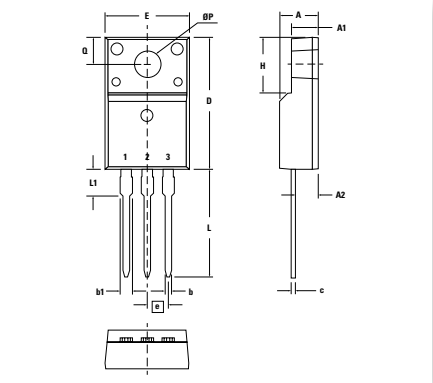

Dim	Millimeters		Inches	
	min	max	min	max
A	4.50	4.90	0.177	0.193
A1	2.34	2.74	0.092	0.108
A2	2.56	2.96	0.101	0.117
b	0.70	0.90	0.028	0.035
b1	1.27	1.47	0.050	0.058
c	0.45	0.60	0.018	0.024
D	15.67	16.07	0.617	0.633
E	9.96	10.36	0.392	0.408
e	2.54 BSC		0.100 BSC	
H	6.48	6.88	0.255	0.271
L	12.68	13.28	0.499	0.523
L1	3.03	3.43	0.119	0.135
Ø P	3.08	3.28	0.121	0.129
Q	3.20	3.40	0.126	0.134

X007b TO-220 ACFP
Weight = 2 g

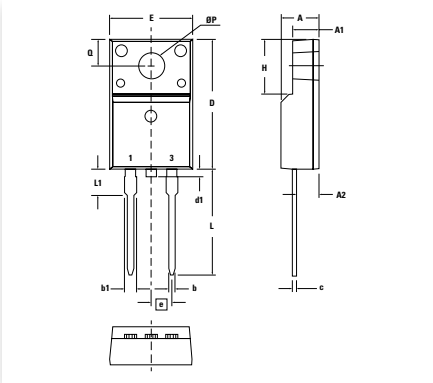

Dim	Millimeters		Inches	
	min	max	min	max
A	4.50	4.90	0.177	0.193
A1	2.34	2.74	0.092	0.108
A2	2.56	2.96	0.101	0.117
b	0.70	0.90	0.028	0.035
b1	1.27	1.47	0.050	0.058
c	0.45	0.60	0.018	0.024
D	15.67	16.07	0.617	0.633
d1	0.00	1.10	0.000	0.043
E	9.96	10.36	0.392	0.408
e	2.54 BSC		0.100 BSC	
H	6.48	6.88	0.255	0.271
L	12.68	13.28	0.499	0.523
L1	3.03	3.43	0.119	0.135
Ø P	3.08	3.28	0.121	0.129
Q	3.20	3.40	0.126	0.134

X008a TO-262 I2PAK
Weight = 1.5 g

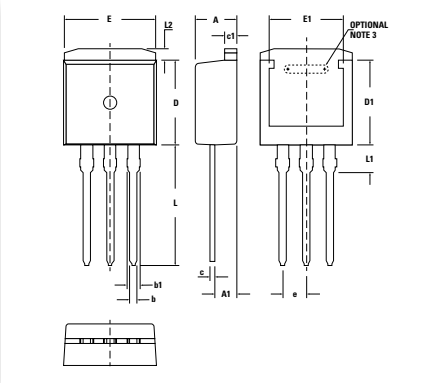

Dim	Millimeters		Inches	
	min	max	min	max
A1	2.20	2.60	0.087	0.102
b	0.70	0.90	0.028	0.035
b1	1.37	1.57	0.054	0.062
c	0.45	0.60	0.018	0.024
c1	1.25	1.40	0.049	0.055
D	9.00	9.40	0.355	0.370
D1	7.20		0.284	
E	9.70	9.90	0.382	0.390
E1	7.00		0.276	
e	2.54 BSC		0.100 BSC	
L	12.88	13.28	0.507	0.523
L1	3.00	–	0.118	–
L2	1.00	1.40	0.039	0.055

X008b TO-262 I2PAK
Weight = 1.5 g

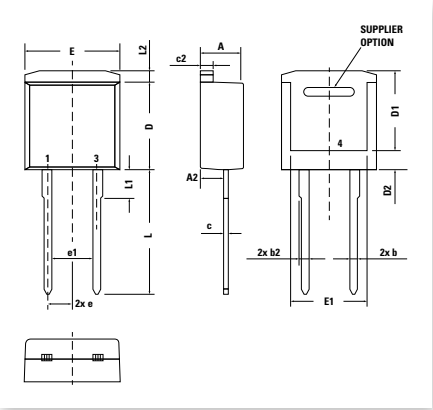

Dim	Millimeters		Inches	
	min	max	min	max
A	4.06	4.83	0.160	0.190
A2	2.41		0.095	
b	0.51	0.99	0.020	0.039
b2	1.14	1.40	0.045	0.055
c	0.40	0.74	0.016	0.029
c2	1.14	1.40	0.045	0.055
D	8.38	9.40	0.330	0.370
D1	8.00	8.89	0.315	0.350
D2	2.5		0.098	
E	9.65	10.41	0.380	0.410
E1	6.22	8.50	0.245	0.335
e	2.54 BSC		0.100 BSC	
e1	4.28		0.169	
L	13.00	13.60	0.512	0.535
L1	2.90	3.10	0.114	0.122
L2	1.02	1.68	0.040	0.066

X009a PLUS220TM
Weight = 2.5 g b) middle leg cut

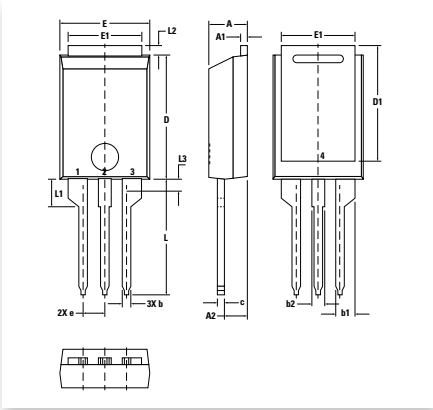

Dim	Millimeters		Inches	
	min	max	min	max
A	4.30	4.70	0.169	0.185
A1	0.70	0.90	0.028	0.035
A2	2.50	3.00	0.098	0.118
b	0.90	1.20	0.035	0.047
b1	2.03	2.41	0.080	0.095
b2	1.37	1.63	0.054	0.064
c	0.70	0.90	0.028	0.035
D	14.00	15.00	0.551	0.591
D1	13.00	13.70	0.512	0.539
E	10.00	11.00	0.394	0.433
E1	8.40	8.80	0.331	0.346
e	2.54 BSC		0.100 BSC	
L	13.00	14.00	0.512	0.551
L1	3.00	3.50	0.118	0.138
L2	0.90	1.30	0.035	0.051
L3	1.20	1.50	0.047	0.059

X010a ISOPLUS220TM AB
Weight = 2.5 g

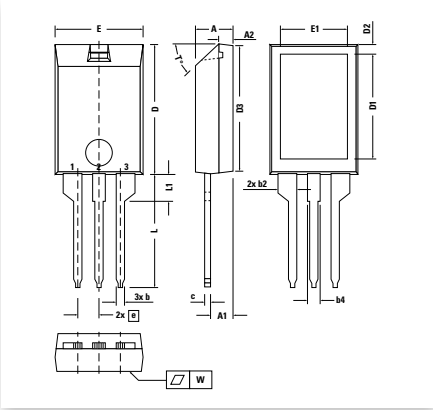

Dim	Millimeters		Inches	
	min	max	min	max
A	4.00	5.00	0.157	0.197
A1	2.50	3.00	0.098	0.118
A2	1.60	1.80	0.063	0.071
b	0.90	1.30	0.035	0.051
b2	2.35	2.55	0.093	0.100
b4	1.25	1.65	0.049	0.065
c	0.70	1.00	0.028	0.039
D	15.00	16.00	0.591	0.630
D1	12.00	13.00	0.472	0.512
D2	1.10	1.50	0.043	0.059
D3	14.90	15.50	0.587	0.610
E	10.00	11.00	0.394	0.433
E1	7.50	8.50	0.295	0.335
e	2.54	BSC	0.100	BSC
L	13.00	14.50	0.512	0.571
L1	3.00	3.50	0.118	0.138
T°	42.5	47.5	–	–
W	–	0.10	–	0.004

X010b ISOPLUS220TM AC
Weight = 2.5 g

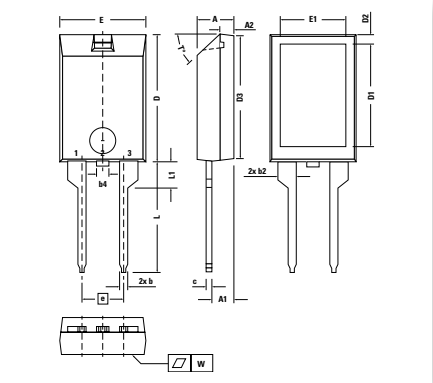

Dim	Millimeters		Inches	
	min	max	min	max
A	4.00	5.00	0.157	0.197
A1	2.50	3.00	0.098	0.118
A2	1.60	1.80	0.063	0.071
b	0.90	1.30	0.035	0.051
b2	1.25	1.65	0.049	0.065
b4	2.35	2.55	0.093	0.100
c	0.70	1.00	0.028	0.039
D	15.00	16.00	0.591	0.630
D1	12.00	13.00	0.472	0.512
D2	1.10	1.50	0.043	0.059
D3	14.90	15.50	0.587	0.610
E	10.00	11.00	0.394	0.433
E1	7.50	8.50	0.295	0.335
e	5.08 BSC		0.200 BSC	
L	13.00	14.50	0.512	0.571
L1	3.00	3.50	0.118	0.138
T°	42.5	47.5	–	–
W	–	0.10	–	0.004

X011a TO-263 AA (D2PAK)
Weight = 1.5 g

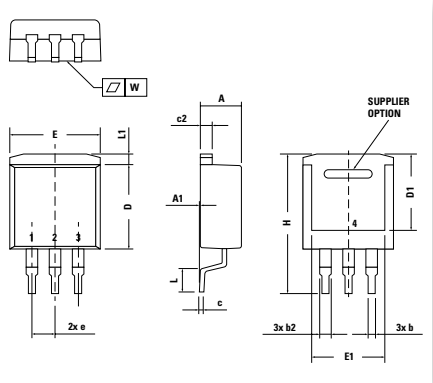

Dim	Millimeters		Inches	
	min	max	min	max
A	4.06	4.83	0.160	0.190
A1	typ. 0.10		typ. 0.004	
b	0.51	0.99	0.020	0.039
b2	1.14	1.40	0.045	0.055
c	0.40	0.74	0.016	0.029
c2	1.14	1.40	0.045	0.055
D	8.38	9.40	0.330	0.370
D1	8.00	8.89	0.315	0.350
E	9.65	10.41	0.380	0.410
E1	6.22	8.13	0.245	0.320
e	2.54 BSC		0.100 BSC	
H	14.61	15.88	0.575	0.625
L	1.78	2.79	0.070	0.110
L1	1.02	1.68	0.040	0.066
W	typ. 0.02	0.040	typ. 0.0008	0.002

X011b TO-263 AB (D2PAK)
Weight = 1.5 g

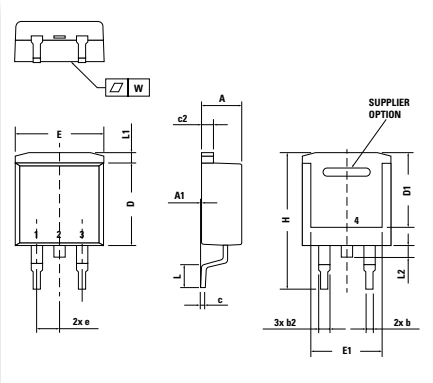

Dim	Millimeters		Inches	
	min	max	min	max
A	4.06	4.83	0.160	0.190
A1	typ. 0.10		typ. 0.004	
b	0.51	0.99	0.020	0.039
b2	1.14	1.40	0.045	0.055
c	0.40	0.74	0.016	0.029
c2	1.14	1.40	0.045	0.055
D	8.38	9.40	0.330	0.370
D1	8.00	8.89	0.315	0.350
E	9.65	10.41	0.380	0.410
E1	6.22	8.13	0.245	0.320
e	2.54 BSC		0.100 BSC	
H	14.61	15.88	0.575	0.625
L	1.78	2.79	0.070	0.110
L1	1.02	1.68	0.040	0.066
W	typ. 0.02	0.040	typ. 0.0008	0.002

X011c TO-263 AB (D2PAK HV)
Weight = 1.5 g

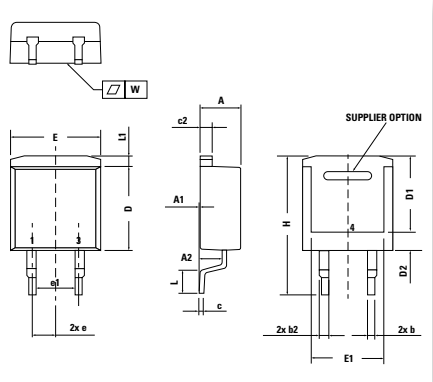

Dim	Millimeters		Inches	
	min	max	min	max
A	4.06	4.83	0.160	0.190
A1	typ 0.10		typ 0.004	
A2	2.410		0.095	
b	0.51	0.99	0.020	0.039
b2	1.14	1.40	0.045	0.055
c	0.40	0.74	0.016	0.029
c2	1.14	1.40	0.045	0.055
D	8.38	9.40	0.330	0.370
D1	8.00	8.89	0.315	0.350
D2	2.5		0.098	
E	9.65	10.41	0.380	0.410
E1	6.22	8.50	0.245	0.335
e	2.54 BSC		0.100 BSC	
e1	4.280		0.169	
H	14.61	15.88	0.575	0.625
L	1.78	2.79	0.070	0.110
L2	1.02	1.68	0.040	0.066
W	typ 0.02	0.040	typ 0.0008	0.002

X012a TO-263 (5)
Weight = 1.5 g

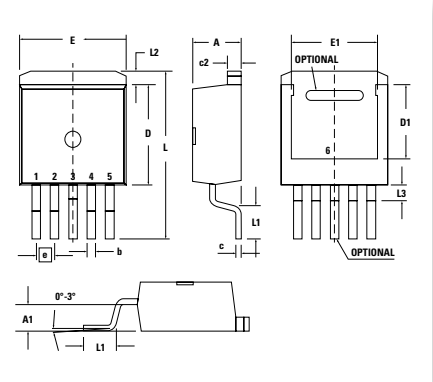

Dim	Millimeters		Inches	
	min	max	min	max
A	4.20	4.80	0.160	0.190
A1	2.10	2.70	0.083	0.106
b	0.60	0.99	0.024	0.039
c	0.40	0.70	0.016	0.028
c2	1.20	1.40	0.047	0.055
D	8.80	9.50	0.346	0.374
D1	6.60	7.20	0.260	0.283
E	9.65	10.30	0.380	0.406
E1	7.50	8.20	0.295	0.323
e	1.70 BSC		0.067 BSC	
L	14.80	15.80	0.583	0.622
L1	2.24	2.84	0.088	0.112
L2	1.00	1.40	0.039	0.067
L3	1.20	1.70	0.047	0.067

X012b TO-263 (7)
Weight = 2.5 g c) middle leg cut

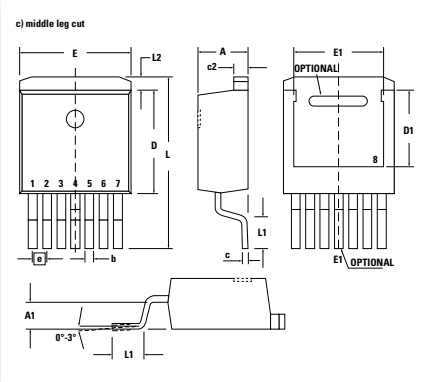

Dim	Millimeters		Inches	
	min	max	min	max
A	4.20	4.60	0.165	0.181
A1	2.45	2.75	0.096	0.108
b	0.65	0.90	0.026	0.035
c	0.40	0.60	0.016	0.024
c2	1.14	1.40	0.045	0.055
D	8.38	8.64	0.330	0.340
D1	6.10	6.35	0.240	0.250
E	10.00	10.30	0.394	0.406
E1	7.34	8.00	0.290	0.315
e	1.27 BSC		0.050 BSC	
L	14.73	15.75	0.580	0.620
L1	2.24	2.84	0.088	0.112
L2	1.35	1.55	0.053	0.061

©2023 Littelfuse, Inc

X013 PLUS220TM (SMD)
Weight = 2 g

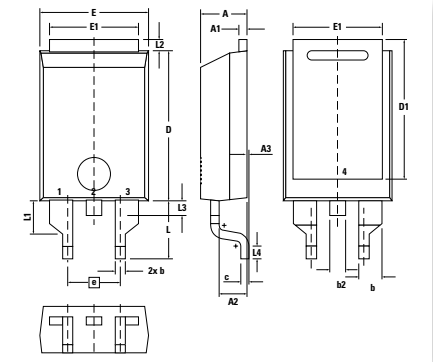

Dim	Millimeters		Inches	
	min	max	min	max
A	4.30	4.70	0.169	0.185
A1	0.70	0.90	0.028	0.035
A2	2.50	3.00	0.098	0.118
A3	0.00	0.25	0.000	0.010
b	0.90	1.20	0.035	0.047
b1	2.03	2.41	0.080	0.095
b2	1.37	1.63	0.054	0.064
c	0.70	0.90	0.028	0.035
D	14.00	15.00	0.551	0.591
D1	13.00	13.70	0.512	0.539
E	10.00	11.00	0.394	0.433
E1	8.40	8.80	0.331	0.346
e	5.08 BSC		0.200 BSC	
L	5.30	5.80	0.209	0.228
L1	3.00	3.50	0.118	0.138
L2	0.90	1.30	0.035	0.051
L3	1.20	1.50	0.047	0.059
L4	1.00	1.50	0.039	0.059

X014a TO-247 AD
Weight = 6 g

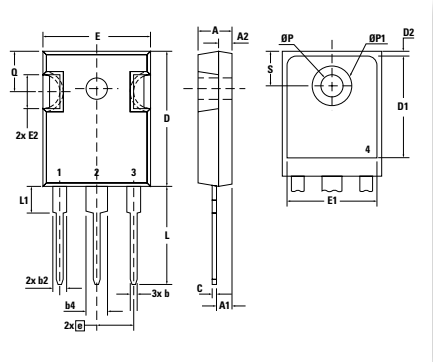

Dim	Millimeters		Inches	
	min	max	min	max
A	4.70	5.30	0.185	0.209
A1	2.21	2.59	0.087	0.102
A2	1.50	2.49	0.059	0.098
b	0.99	1.40	0.039	0.055
b2	1.65	2.39	0.065	0.094
b4	2.59	3.43	0.102	0.135
c	0.38	0.89	0.015	0.035
D	20.79	21.45	0.819	0.845
D1	13.07	–	0.515	–
D2	0.51	1.35	0.020	0.053
E	15.48	16.24	0.610	0.640
E1	13.45	–	0.53	–
E2	4.31	5.48	0.170	0.216
e	5.45 BSC		0.215 BSC	
L	19.80	20.30	0.078	0.800
L1	–	4.49	–	0.177
Ø P	3.55	3.65	0.140	0.144
Ø P1	–	7.39	–	0.290
Q	5.38	6.19	0.212	0.244
S	6.14 BSC		0.242 BSC	

X014b TO-247 AD
Weight = 6 g

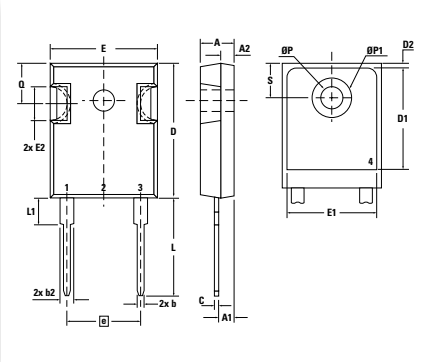

Dim	Millimeters		Inches	
	min	max	min	max
A	4.70	5.30	0.185	0.209
A1	2.21	2.59	0.087	0.102
A2	1.50	2.49	0.059	0.098
b	0.99	1.40	0.039	0.055
b2	1.65	2.39	0.065	0.094
b4	2.59	3.43	0.102	0.135
c	0.38	0.89	0.015	0.035
D	20.79	21.45	0.819	0.845
D1	13.07	–	0.515	–
D2	0.51	1.35	0.020	0.053
E	15.48	16.24	0.610	0.640
E1	13.45	–	0.530	–
E2	4.31	5.48	0.170	0.216
e	10.90 BSC		0.430 BSC	
L	19.80	20.30	0.078	0.800
L1	–	4.49	–	0.177
Ø P	3.55	3.65	0.140	0.144
Ø P1	–	7.39	–	0.290
Q	5.38	6.19	0.212	0.244
S	6.14 BSC		0.242 BSC	

X014c TO-247 AD
Weight = 6 g

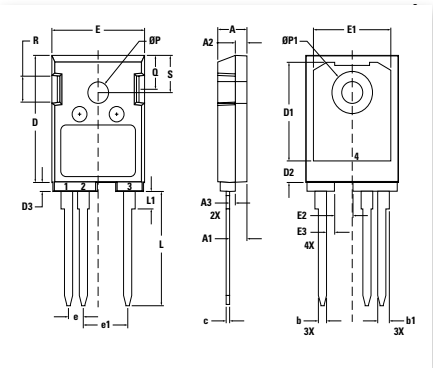

Dim	Millimeters		Inches	
	min	max	min	max
A	4.90	5.10	0.193	0.201
A1	2.90	3.10	0.114	0.122
A2	1.90	2.10	0.075	0.083
A3	0.90	1.10	0.035	0.043
b	1.35	1.50	0.053	0.059
b1	1.90	2.10	0.075	0.083
c	0.55	0.75	0.022	0.030
D	20.80	21.40	0.819	0.843
D1	16.20	16.40	0.638	0.646
D2	3.40	3.70	0.134	0.146
D3	1.40	1.60	0.055	0.063
E	15.80	16.20	0.622	0.638
E1	13.20	13.40	0.520	0.528
E2	3.00	3.20	0.118	0.126
E3	1.30	1.50	0.051	0.059
e	2.54 BSC		0.100 BSC	
e1	7.62 BSC		0.300 BSC	
L	18.60	19.00	0.732	0.748
L1	2.70	3.00	0.106	0.118
Ø P	3.50	3.60	0.138	0.142
Ø P1	6.90	7.10	0.272	0.280
Q	5.50	5.70	0.216	0.224
R	4.20	4.30	0.165	0.169
S	6.10	6.30	0.240	0.248

X015a PLUS247TM
Weight = 7 g

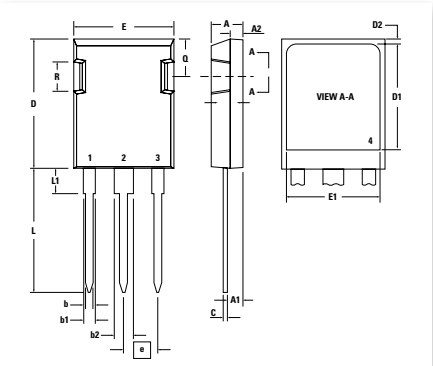

Dim	Millimeters		Inches	
	min	max	min	max
A	4.83	5.21	0.190	0.205
A1	2.29	2.54	0.090	0.100
A2	1.91	2.16	0.075	0.085
b	1.14	1.40	0.045	0.055
b1	1.90	2.10	0.075	0.084
b2	2.92	3.12	0.115	0.123
C	0.60	0.80	0.024	0.031
D	20.80	21.34	0.819	0.840
E	15.75	16.13	0.620	0.635
e	5.45 BSC		0.215 BSC	
L	19.80	20.30	0.078	0.800
L1	3.80	4.30	0.150	0.170
Q	5.60	6.20	0.220	0.244
R	4.32	4.83	0.170	0.190

X015c PLUS247TM
Weight = 7 g

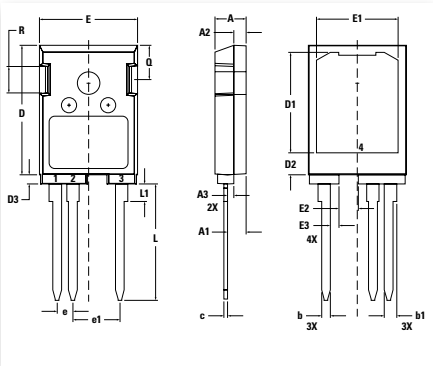

Dim	Millimeters		Inches	
	min	max	min	max
A	4.90	5.10	0.193	0.201
A1	2.90	3.10	0.114	0.122
A2	1.90	2.10	0.075	0.083
A3	0.90	1.10	0.035	0.043
b	1.35	1.50	0.053	0.059
b1	1.90	2.10	0.075	0.083
c	0.55	0.75	0.022	0.030
D	20.80	21.40	0.819	0.843
D1	16.20	16.40	0.638	0.646
D2	3.40	3.70	0.134	0.146
D3	1.40	1.60	0.055	0.063
E	15.80	16.20	0.622	0.638
E1	13.20	13.40	0.520	0.528
E2	3.00	3.20	0.118	0.126
E3	1.30	1.50	0.051	0.059
e	2.54 BSC		0.100 BSC	
e1	7.62 BSC		0.300 BSC	
L	18.60	19.00	0.732	0.748
L1	2.70	3.00	0.106	0.118
Q	5.50	5.70	0.216	0.224
R	4.20	4.30	0.165	0.169

Outline Drawings

X016a ISOPLUS247TM
Weight = 4.5 g

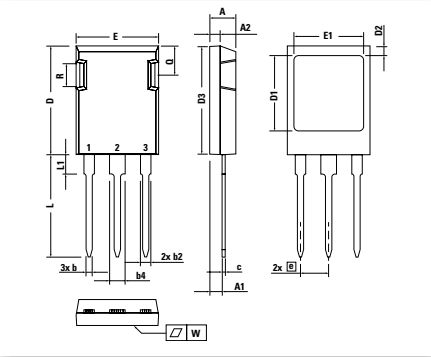

Dim	Millimeters		Inches	
	min	max	min	max
A	4.83	5.21	0.190	0.205
A1	2.29	2.54	0.090	0.100
A2	1.91	2.16	0.075	0.085
b	1.14	1.40	0.045	0.055
b2	1.91	2.20	0.075	0.087
b4	2.92	3.24	0.115	0.128
c	0.61	0.83	0.024	0.033
D	20.80	21.34	0.819	0.840
D1	15.75	16.26	0.620	0.640
D2	1.65	2.15	0.065	0.085
D3	20.30	20.70	0.799	0.815
E	15.75	16.13	0.620	0.635
E1	13.21	13.72	0.520	0.540
e	5.45 BSC		0.215 BSC	
L	19.81	20.60	0.780	0.811
L1	3.81	4.38	0.150	0.172
Q	5.59	6.20	0.220	0.244
R	4.25	5.50	0.167	0.217
W	–	0.10	–	0.004

X016b ISOPLUS247™
Weight = 4.5 g

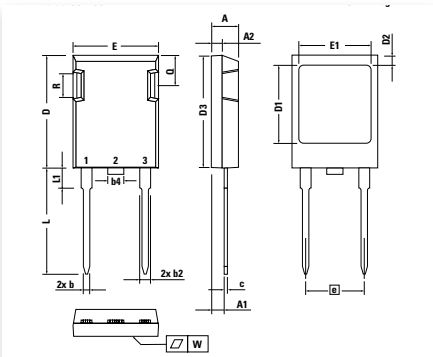

Dim	Millimeters		Inches	
	min	max	min	max
A	4.83	5.21	0.190	0.205
A1	2.29	2.54	0.090	0.100
A2	1.91	2.16	0.075	0.085
b	1.14	1.40	0.045	0.055
b2	1.91	2.20	0.075	0.087
b4	2.92	3.24	0.115	0.128
c	0.61	0.83	0.024	0.033
D	20.80	21.34	0.819	0.840
D1	15.75	16.26	0.620	0.640
D2	1.65	2.15	0.065	0.085
D3	20.30	20.70	0.799	0.815
E	15.75	16.13	0.620	0.635
E1	13.21	13.72	0.520	0.540
e	10.90	BSC	0.430	BSC
L	19.81	20.60	0.780	0.811
L1	3.81	4.38	0.150	0.172
Q	5.59	6.20	0.220	0.244
R	4.25	5.50	0.167	0.217
W	–	0.10	–	0.004

X016C ISO247™
Weight = 4.5 g

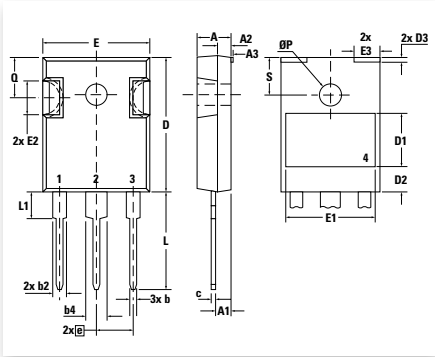

Dim	Millimeters		Inches	
	min	max	min	max
A	4.70	5.30	0.185	0.209
A1	2.21	2.59	0.087	0.102
A2	1.50	2.49	0.059	0.098
A3	typ.	0.05	typ.	0.002
b	0.99	1.40	0.039	0.055
b2	1.65	2.39	0.065	0.094
b4	2.59	3.43	0.102	0.135
C	0.38	0.89	0.015	0.035
D	20.79	21.45	0.819	0.844
D1	typ.	8.90	typ.	0.350
D2	typ.	2.90	typ.	0.114
D3	typ.	1.00	typ.	0.039
E	15.49	16.24	0.610	0.639
E1	typ.	13.45	typ.	0.530
E2	4.31	5.48	0.170	0.216
E3	typ.	4.00	typ.	0.157
e	5.46	BSC	0.215	BSC
L	19.80	20.30	0.780	0.799
L1	–	4.49	–	0.177
Ø P	3.55	3.65	0.140	0.144
Q	5.38	6.19	0.212	0.244
S	6.14 BSC		0.242 BSC	

X016d ISO247™
Weight = 4 g

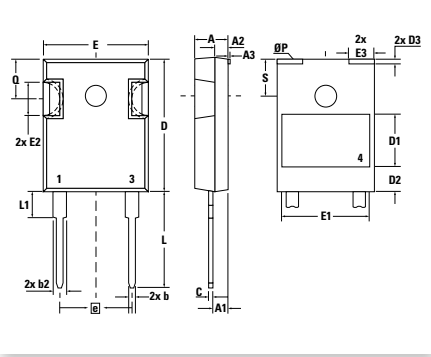

Dim	Millimeters		Inches	
	min	max	min	max
A	4.70	5.30	0.185	0.209
A1	2.21	2.59	0.087	0.102
A2	1.50	2.49	0.059	0.098
A3	typ.	0.05	typ.	0.002
b	0.99	1.40	0.039	0.055
b2	1.65	2.39	0.065	0.094
C	0.38	0.89	0.015	0.035
D	20.79	21.45	0.819	0.844
D1	typ.	8.90	typ.	0.350
D2	typ.	2.90	typ.	0.114
D3	typ.	1.00	typ.	0.039
E	15.49	16.24	0.610	0.639
E1	typ.	13.45	typ.	0.530
E2	4.31	5.48	0.170	0.216
E3	typ.	4.00	typ.	0.157
e	10.92	BSC	0.430	BSC
L	19.80	20.30	0.780	0.799
L1	–	4.49	–	0.177
Ø P	3.55	3.65	0.140	0.144
Q	5.38	6.19	0.212	0.244
S	6.14	BSC	0.242	BSC

X017a TO-3P
Weight = 5.5 g

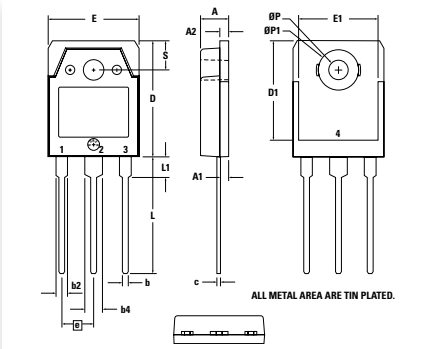

Dim	Millimeters		Inches	
	min	max	min	max
A	4.70	4.90	0.185	0.193
A1	1.30	1.50	0.051	0.059
A2	1.45	1.65	0.057	0.065
b	0.90	1.15	0.035	0.045
b2	1.90	2.20	0.075	0.087
b4	2.90	3.20	0.114	0.126
c	0.55	0.80	0.022	0.031
D	19.80	20.10	0.780	0.791
D1	16.90	17.20	0.665	0.677
E	15.50	15.80	0.610	0.622
E1	13.50	13.70	0.531	0.539
e	5.45 BSC		0.215 BSC	
L	19.80	20.20	0.780	0.795
L1	3.40	3.60	0.134	0.142
Ø P	3.20	3.40	0.126	0.134
Ø P1	6.90	7.10	0.272	0.280
S	4.90	5.10	0.193	0.201

X017b TO-3P
Weight = 5.5 g

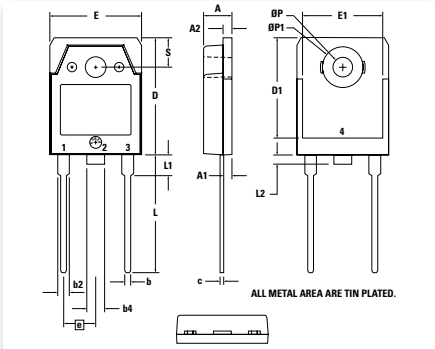

Dim	Millimeters		Inches	
	min	max	min	max
A	4.70	4.90	0.185	0.193
A1	1.30	1.50	0.051	0.059
A2	1.45	1.65	0.057	0.065
b	0.90	1.15	0.035	0.045
b2	1.90	2.20	0.075	0.087
b4	2.90	3.20	0.114	0.126
c	0.55	0.80	0.022	0.031
D	19.80	20.10	0.780	0.791
D1	16.90	17.20	0.665	0.677
E	15.50	15.80	0.610	0.622
E1	13.50	13.70	0.531	0.539
e	5.45 BSC		0.215 BSC	
L	19.80	20.20	0.780	0.795
L1	3.40	3.60	0.134	0.142
L2	0.00	1.40	0.000	0.055
Ø P	3.20	3.40	0.126	0.134
Ø P1	6.90	7.10	0.272	0.280
S	4.90	5.10	0.193	0.201

©2023 Littelfuse, Inc

X017c TO-3PFP
Weight = 5.5 g

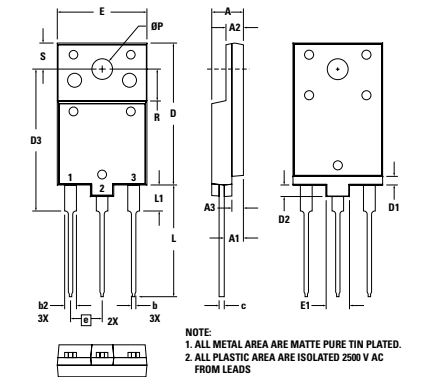

Dim	Millimeters		Inches	
	min	max	min	max
A	5.40	5.80	0.213	0.228
A1	3.10	3.50	0.122	0.138
A2	2.90	3.30	0.114	0.130
A3	1.90	2.30	0.075	0.091
b	0.65	0.95	0.026	0.037
b2	1.90	2.30	0.075	0.091
c	0.80	1.10	0.031	0.043
D	24.30	24.70	0.957	0.972
D1	1.30	1.70	0.051	0.067
D2	1.80	2.2	0.071	0.087
E	15.40	15.80	0.606	0.622
E1	3.90	4.30	0.154	0.169
e	5.45 BSC		0.215 BSC	
L	19.00	19.50	0.748	0.768
L1	4.30	4.70	0.169	0.185
Ø P	3.40	3.80	0.134	0.150
R	5.30	5.70	0.209	0.224
S	4.30	4.70	0.169	0.185

X017d TO-3PFP
Weight = 5.4 g

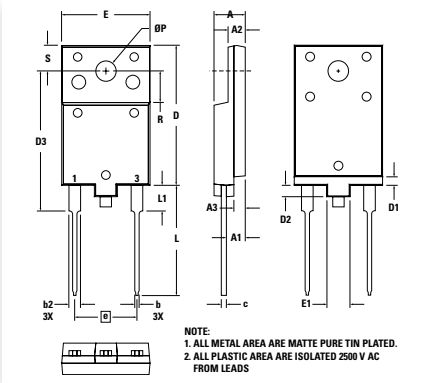

Dim	Millimeters		Inches	
	min	max	min	max
A	5.40	5.80	0.213	0.228
A1	3.10	3.50	0.122	0.138
A2	2.90	3.30	0.114	0.130
A3	1.90	2.30	0.075	0.091
b	0.65	0.95	0.026	0.037
b2	1.90	2.30	0.075	0.091
c	0.80	1.10	0.031	0.043
D	24.30	24.70	0.957	0.972
D1	1.30	1.70	0.051	0.067
D2	1.80	2.2	0.071	0.087
E	15.40	15.80	0.606	0.622
E1	3.90	4.30	0.154	0.169
e	10.9	BSC	0.430	BSC
L	19.00	19.50	0.748	0.768
L1	4.30	4.70	0.169	0.185
Ø P	3.40	3.80	0.134	0.150
R	5.30	5.70	0.209	0.224
S	4.30	4.70	0.169	0.185

X018 TO-268 I3PAK
Weight = 4.5 g

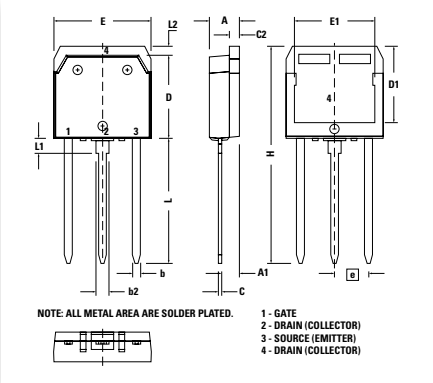

Dim	Millimeters		Inches	
	min	max	min	max
A	4.90	5.10	0.193	0.201
A1	2.70	2.90	0.106	0.114
b	1.15	1.45	0.045	0.057
b2	1.90	2.10	0.075	0.083
C	0.40	0.65	0.016	0.026
C 2	1.45	1.60	0.057	0.063
D	13.80	14.00	0.543	0.551
D1	12.40	12.70	0.488	0.500
E	15.85	16.05	0.624	0.632
E1	13.30	13.60	0.524	0.535
e	5.45 BSC		0.215 BSC	
H	34.67	35.43	1.365	1.395
L	19.81	20.32	0.780	0.800
L1	2.00	2.30	0.079	0.091
L2	1.00	1.15	0.039	0.045

X019 TO-268 AA (D3PAK)
Weight = 4 g

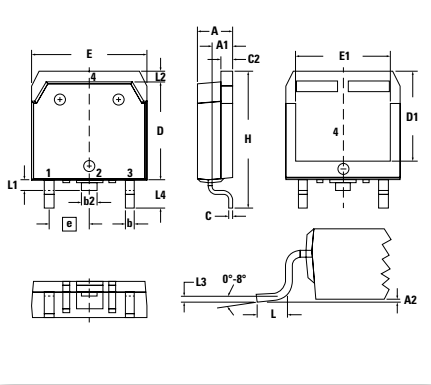

Dim	Millimeters		Inches	
	min	max	min	max
A	4.90	5.10	0.193	0.201
A1	2.70	2.90	0.106	0.114
A2	0.02	0.25	0.001	0.100
b	1.15	1.45	0.045	0.057
b2	1.90	2.10	0.075	0.083
C	0.40	0.65	0.016	0.026
C 2	1.45	1.60	0.057	0.063
D	13.80	14.00	0.543	0.551
D1	12.40	12.70	0.488	0.500
E	15.85	16.05	0.624	0.632
E1	13.30	13.60	0.524	0.535
e	5.45 BSC		0.215 BSC	
H	18.70	19.10	0.736	0.752
L	2.40	2.70	0.094	0.106
L1	1.20	1.40	0.047	0.055
L2	1.00	1.15	0.039	0.045
L3	2.54 BSC		0.100 BSC	
L4	3.80	4.10	0.150	0.161

X019a TO-268 AA (D3PAK HV)
Weight = 4 g

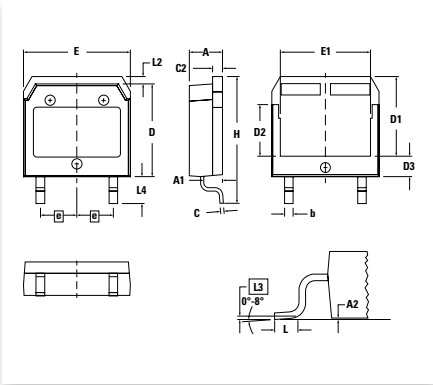

Dim	Millimeters		Inches	
	min	max	min	max
A	4.90	5.10	0.193	0.201
A1	2.70	2.90	0.106	0.114
A2	0.02	0.25	0.001	0.100
b	1.15	1.45	0.045	0.057
C	0.40	0.65	0.016	0.026
C 2	1.45	1.60	0.057	0.063
D	13.80	14.00	0.543	0.551
D1	11.80	12.10	0.465	0.476
D2	7.50	7.80	0.295	0.307
D3	2.90	3.20	0.114	0.126
E	15.85	16.05	0.624	0.632
E1	13.30	13.60	0.524	0.535
e	5.45 BSC		0.215 BSC	
H	18.70	19.10	0.736	0.752
L	1.70	2.00	0.067	0.079
L2	1.00	1.15	0.039	0.045
L3	0.25 BSC		0.010 BSC	
L4	3.80	4.10	0.150	0.161

X020a TO-264 AA
Weight = 10 g

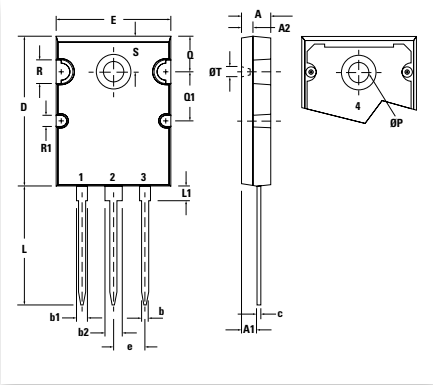

Dim	Millimeters		Inches	
	min	max	min	max
A	4.82	5.13	0.190	0.202
A1	2.54	2.89	0.100	0.114
A2	2.00	2.10	0.079	0.083
b	1.12	1.42	0.044	0.056
b2	2.90	3.09	0.114	0.122
c	0.53	0.83	0.021	0.033
D	25.91	26.16	1.020	1.030
E	19.81	19.96	0.780	0.786
e	5.45 BSC		0.215 BSC	
J	0.00	0.25	0.000	0.010
K	0.00	0.25	0.000	0.010
L	20.32	20.83	0.800	0.820
L1	2.29	2.59	0.090	0.102
P	3.17	2.66	0.125	0.144
Q	6.07	6.27	0.239	0.247
Q1	8.38	8.69	0.330	0.342
R	3.81	4.32	0.150	0.170
R1	1.78	2.29	0.070	0.090
S	6.04	6.30	0.238	0.248
T	1.57	1.83	0.062	0.072

Outline Drawings

X021a PLUS264TM
Weight = 10 g

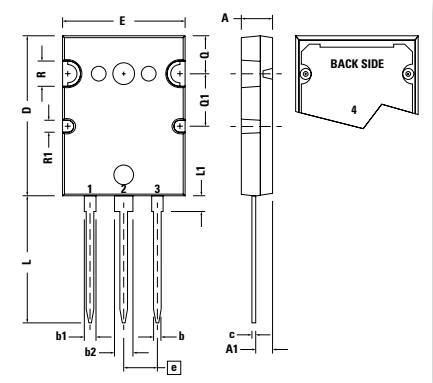

Dim	Millimeters		Inches	
	min	max	min	max
A	4.70	5.31	0.185	0.209
A1	2.59	3.00	0.102	0.118
b	0.94	1.40	0.037	0.055
b1	2.21	2.59	0.087	0.102
b2	2.79	3.20	0.110	0.126
c	0.43	0.74	0.017	0.029
D	25.58	26.59	1.007	1.047
E	19.30	20.29	0.760	0.799
e	5.45 BSC		0.215 BSC	
L	19.79	21.39	0.779	0.842
L1	2.21	2.59	0.087	0.102
Q	6.10	6.50	0.240	0.256
Q1	8.38	8.79	0.330	0.346
Ø R	3.94	4.75	0.155	0.187
ØR1	2.16	2.36	0.085	0.093

X022a ISOPLUS264™
Weight = 7.5 g

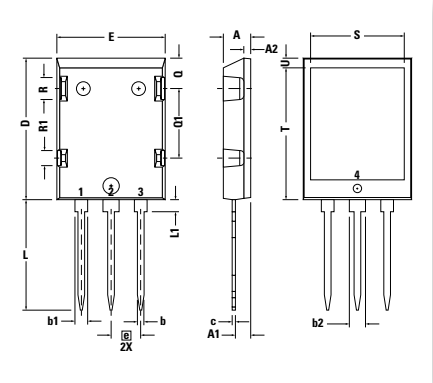

Dim	Millimeters		Inches	
	min	max	min	max
A	4.83	5.21	0.190	0.205
A1	2.59	3.00	0.102	0.118
A2	1.17	1.40	0.046	0.055
b	1.14	1.40	0.045	0.055
b1	1.60	1.83	0.063	0.072
b2	2.54	2.79	0.100	0.110
b3	1.47	1.73	0.058	0.068
c	0.51	0.74	0.020	0.029
D	25.91	26.42	1.020	1.040
E	19.56	20.29	0.770	0.799
e	3.81 BSC		0.150 BSC	
L	19.81	21.83	0.780	0.820
L1	2.03	2.59	0.080	0.102
Q	5.33	5.97	0.210	0.235
Q1	12.45	13.03	0.490	0.513
R	3.81	4.57	0.150	0.180
R1	2.54	3.30	0.100	0.130
S	16.97	17.53	0.668	0.690
T	20.34	20.85	0.801	0.821
U	1.65	2.03	0.065	0.080

X022 ISOPLUS264™
Weight = 7.5 g

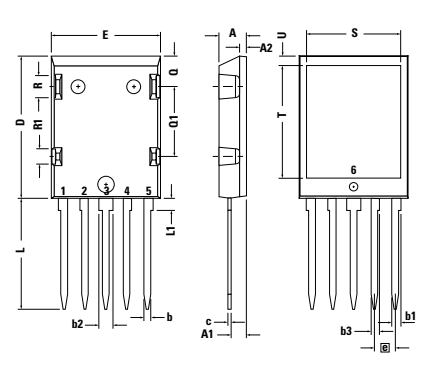

Dim	Millimeters		Inches	
	min	max	min	max
A	4.83	5.21	0.190	0.205
A1	2.59	3.00	0.102	0.118
A2	1.17	1.40	0.046	0.055
b	1.14	1.40	0.045	0.055
b1	1.60	1.83	0.063	0.072
b2	2.54	2.79	0.100	0.110
b3	1.47	1.73	0.058	0.068
c	0.51	0.74	0.020	0.029
D	25.91	26.42	1.020	1.040
E	19.56	20.29	0.770	0.799
e	3.81 BSC		0.150 BSC	
L	19.81	21.83	0.780	0.820
L1	2.03	2.59	0.080	0.102
Q	5.33	5.97	0.210	0.235
Q1	12.45	13.03	0.490	0.513
R	3.81	4.57	0.150	0.180
R1	2.54	3.30	0.100	0.130
S	16.97	17.53	0.668	0.690
T	20.34	20.85	0.801	0.821
U	1.65	2.03	0.065	0.080

X024a ISOPLUS i4-PAC™
Weight = 6 g

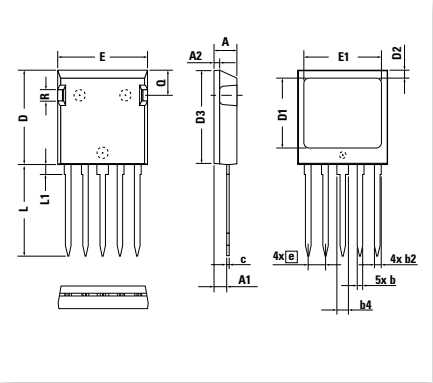

Dim	Millimeters		Inches	
	min	max	min	max
A	4.83	5.21	0.190	0.205
A1	2.59	3.00	0.102	0.118
A2	1.17	2.16	0.046	0.085
b	1.14	1.40	0.045	0.055
b2	1.47	1.73	0.058	0.068
b4	2.54	2.79	0.100	0.110
c	0.51	0.74	0.020	0.029
D	20.80	21.34	0.819	0.840
D1	14.99	15.75	0.590	0.620
D2	1.65	2.03	0.065	0.080
D3	20.30	20.70	0.799	0.815
E	19.56	20.29	0.770	0.799
E1	16.76	17.53	0.660	0.690
e	3.81 BSC		0.150 BSC	
L	19.81	21.34	0.780	0.840
L1	2.11	2.59	0.083	0.102
Q	5.33	6.20	0.210	0.244
R	2.54	4.57	0.100	0.180
W	–	0.10	–	0.004

X024b ISOPLUS i4-PAC™
Weight = 5.5 g

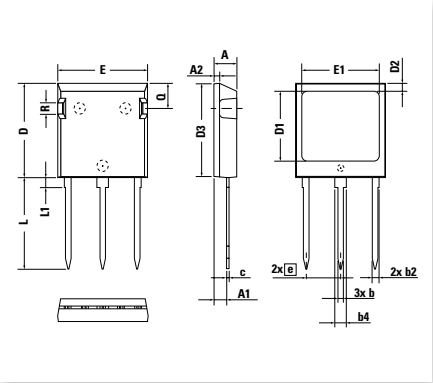

Dim	Millimeters		Inches	
	min	max	min	max
A	4.83	5.21	0.190	0.205
A1	2.59	3.00	0.102	0.118
A2	1.17	2.16	0.046	0.085
b	1.14	1.40	0.045	0.055
b2	1.47	1.73	0.058	0.068
b4	2.54	2.79	0.100	0.110
c	0.51	0.74	0.020	0.029
D	20.80	21.34	0.819	0.840
D1	14.99	15.75	0.590	0.620
D2	1.65	2 .03	0.065	0.080
D3	20.30	20.70	0.799	0.815
E	19.56	20.29	0.770	0.799
E1	16.76	17.53	0.660	0.690
e	7.62 BSC		0.300 BSC	
L	19.81	21.34	0.780	0.840
L1	2.11	2.59	0.083	0.102
Q	5.33	6.20	0.210	0.244
R	2.54	4.57	0.100	0.180
W	–	0.10	–	0.004

X024c ISOPLUS i4-PAC™
Weight = 5.5 g

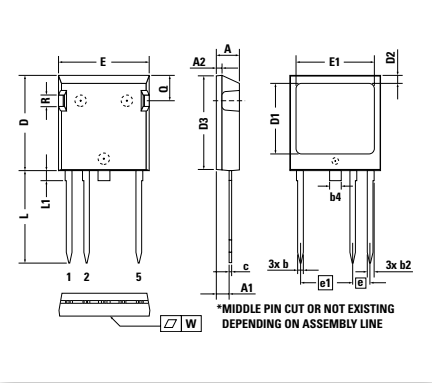

Dim	Millimeters		Inches	
	min	max	min	max
A	4.83	5.21	0.190	0.205
A1	2.59	3.00	0.102	0.118
A2	1.17	2.16	0.046	0.085
b	1.14	1.40	0.045	0.055
b2	1.47	1.73	0.058	0.068
b4*	2.54	2.79	0.100	0.110
c	0.51	0.74	0.020	0.029
D	20.80	21.34	0.819	0.840
D1	14.99	15.75	0.590	0.620
D2	1.65	2.03	0.065	0.080
D3	20.30	20.70	0.799	0.815
E	19.56	20.29	0.770	0.799
E1	16.76	17.53	0.660	0.690
e	3.81 BSC		0.150 BSC	
e1	11.43 BSC		0.450 BSC	
L	19.81	21.34	0.780	0.840
L1	2.11	2.59	0.083	0.102
Q	5.33	6.20	0.210	0.244
R	2.54	4.57	0.100	0.180
W	–	0.10	–	0.004

©2023 Littelfuse, Inc

X024d ISOPLUS i4-PAC™
Weight = 6 g

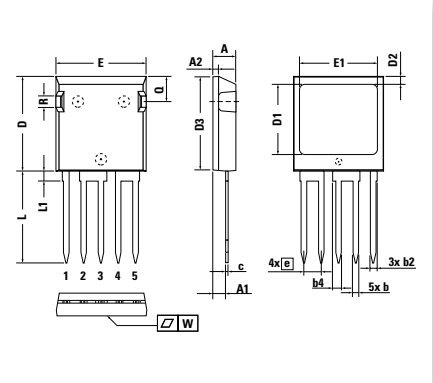

Dim	Millimeters		Inches	
	min	max	min	max
A	4.83	5.21	0.190	0.205
A1	2.59	3.00	0.102	0.118
A2	1.17	2.16	0.046	0.085
b	1.14	1.40	0.045	0.055
b2	1.47	1.73	0.058	0.068
c	0.51	0.74	0.020	0.029
D	20.80	21.34	0.819	0.840
D1	14.99	15.75	0.590	0.620
D2	1.65	2.03	0.065	0.080
D3	20.30	20.70	0.799	0.815
E	19.56	20.29	0.770	0.799
E1	16.76	17.53	0.660	0.690
e	3.81	BSC	0.150	BSC
L	19.81	21.34	0.780	0.840
L1	2.11	2.59	0.083	0.102
Q	5.33	6.20	0.210	0.244
R	2.54	4.57	0.100	0.180
W	–	0.10	–	0.004

X024e ISOPLUS i4-PAC™
Weight = 6 g

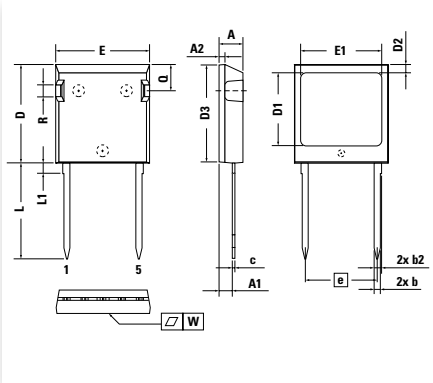

Dim	Millimeters		Inches	
	min	max	min	max
A	4.83	5.21	0.190	0.205
A1	2.59	3.00	0.102	0.118
A2	1.17	2.16	0.046	0.085
b	1.14	1.40	0.045	0.055
b2	1.47	1.73	0.058	0.068
c	0.51	0.74	0.020	0.029
D	20.80	21.34	0.819	0.840
D1	14.99	15.75	0.590	0.620
D2	1.65	2.03	0.065	0.080
D3	20.30	20.70	0.799	0.815
E	19.56	20.29	0.770	0.799
E1	16.76	17.53	0.660	0.690
e	15.24	BSC	0.600	BSC
L	19.81	21.34	0.780	0.840
L1	2.11	2.59	0.083	0.102
Q	5.33	6.20	0.210	0.244
R	2.54	4.57	0.100	0.180
W	–	0.10	–	0.004

X025a GBFP
Weight = 7 g

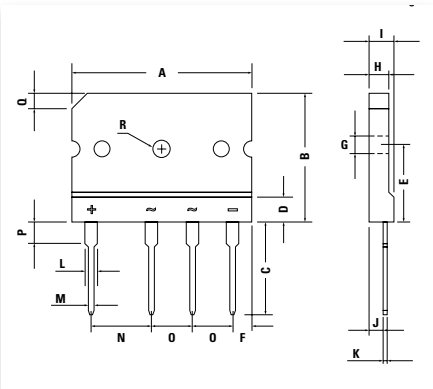

Dim	Millimeters		Inches	
	min	max	min	max
A	29.70	30.30	1.170	1.194
B	19.70	20.30	0.776	0.800
C	17.00	18.00	0.670	0.709
D	4.70	4.90	0.185	0.193
E	10.80	11.20	0.426	0.441
F	2.30	2.70	0.091	0.106
G	3.10	3.40	0.122	0.134
H	3.40	3.80	0.134	0.150
I	4.40	4.80	0.173	0.189
J	2.50	2.90	0.099	0.114
K	0.60	0.80	0.024	0.032
L	2.00	2.40	0.079	0.095
M	0.90	1.10	0.035	0.043
N	9.80	10.20	0.386	0.402
O	7.30	7.70	0.288	0.303
P	3.80	4.20	0.150	0.165
Q	(3.0) × 45°		(0.118) × 45°	
Ø R	3.1	3.4	0.122	0.134

X025b GUFP
Weight = 8.5 g

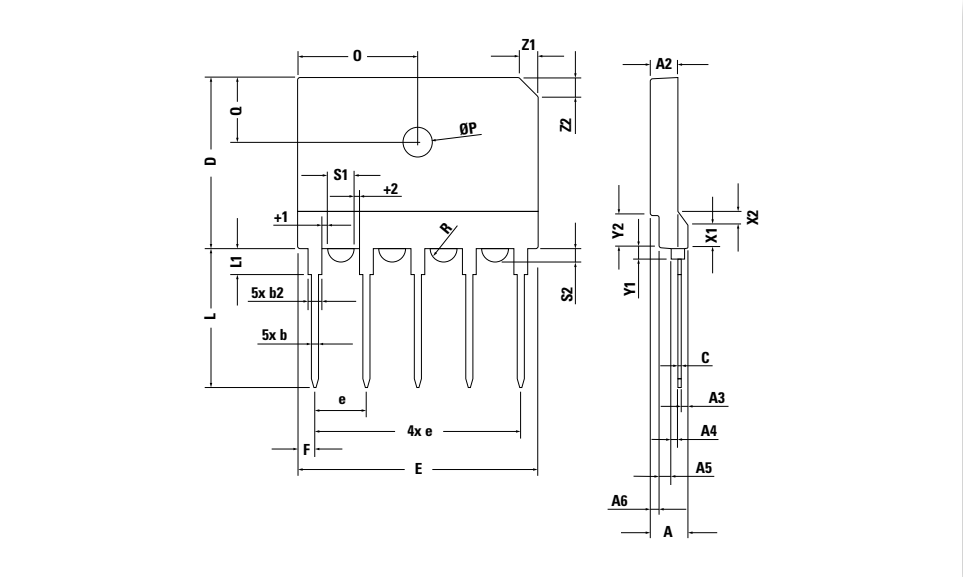

Dim	Millimeters			Inches		
	min	typ.	max	min	typ.	max
A	5.40	5.50	5.60	0.213	0.217	0.221
A2	3.90	4.00	4.10	0.154	0.158	0.162
A3	0.95	1.00	1.10	0.037	0.039	0.043
A4	0.95	1.00	1.05	0.037	0.039	0.041
A5	1.60	1.70	1.80	0.063	0.067	0.071
A6	1.25	1.30	1.35	0.049	0.051	0.053
b	0.95	1.00	1.05	0.037	0.039	0.041
b2	1.95	2.00	2.05	0.077	0.079	0.081
C	0.45	0.50	0.55	0.018	0.020	0.022
D	24.80	25.00	25.20	0.977	0.985	0.993
E	34.70	35.00	35.30	1.367	1.379	1.391
e	BSC	7.50	–	BSC	0.296	–
F	2.40	2.50	2.60	0.095	0.099	0.102
L	2.30	20.40	2.50	0.091	0.804	0.099
L1	3.70	3.75	3.80	0.146	0.148	0.150
O	17.40	17.50	17.60	0.686	0.690	0.693
Ø P	4.10	4.20	4.30	0.162	0.165	0.169
Q	9.20	9.30	9.40	0.362	0.366	0.370
Ø/2 R	–	1.77	–	–	0.070	–
s1	3.45	3.50	3.55	0.136	0.138	0.140
s2	1.45	1.50	1.55	0.057	0.059	0.061
t1	0.95	1.00	1.05	0.037	0.039	0.041
t2	0.95	1.00	1.05	0.037	0.039	0.041
x1	3.20	3.30	3.40	0.126	0.130	0.134
x2	1.90	2.00	2.10	0.075	0.079	0.083
y1	1.60	1.65	1.70	0.063	0.065	0.067
y2	4.65	4.70	4.75	0.183	0.185	0.187
z1	2.80	2.90	3.00	0.110	0.114	0.118

Outline Drawings

X026c ISOPLUS™-DIL (SMD)
Weight = 13 g

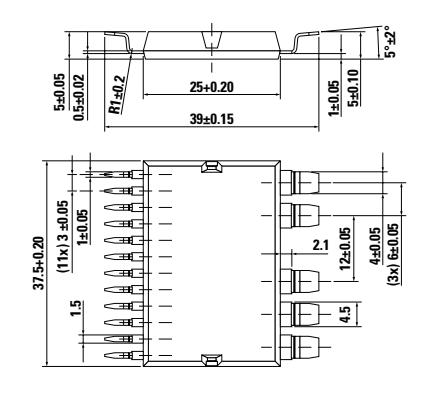

X026d ISOPLUS™-DIL (SMD)
Weight = 13 g

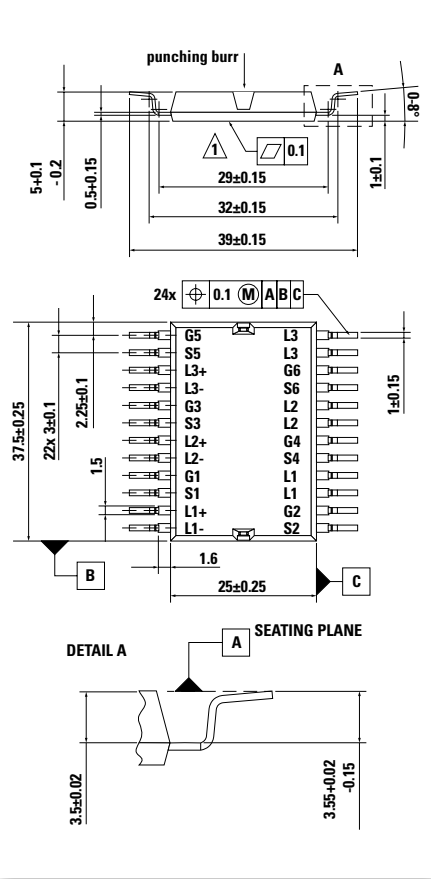

X027a SOT-227 B miniBLOC Weight
X027b SOT-227 UI miniBLOC = 29 g

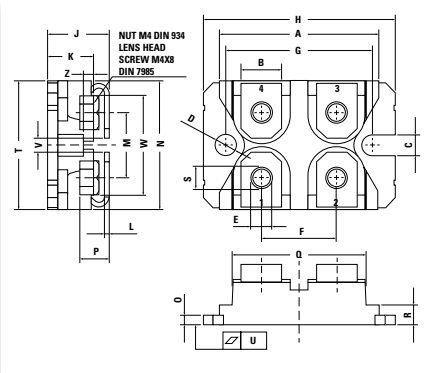

Dim	Millimeters		Inches	
	min	max	min	max
A	31.50	31.88	1.240	1.255
B	7.80	8.20	0.307	0.323
C	4.09	4.29	0.161	0.169
D	4.09	4.29	0.161	0.169
E	4.09	4.29	0.161	0.169
F	14.91	15.11	0.587	0.595
G	30.12	30.30	1.186	1.193
H	37.80	38.23	1.488	1.505
J	11.68	12.22	0.460	0.481
K	8.92	9.60	0.351	0.378
L	0.74	0.84	0.029	0.033
M	12.50	13.10	0.492	0.516
N	25.15	25.42	0.990	1.001
O	1.95	2.13	0.077	0.084
P	4.95	6.20	0.195	0.244
Q	26.54	26.90	1.045	1.059
R	3.94	4.42	0.155	0.174
S	4.55	4.85	0.179	0.191
T	24.59	25.25	0.968	0.994
U	-0.05	0.10	-0.002	0.004
V	3.20	5.50	0.126	0.217
W	19.81	21.08	0.780	0.830
Z	2.50	2.70	0.098	0.106

X028 ISOPLUS227™
Weight = 19 g

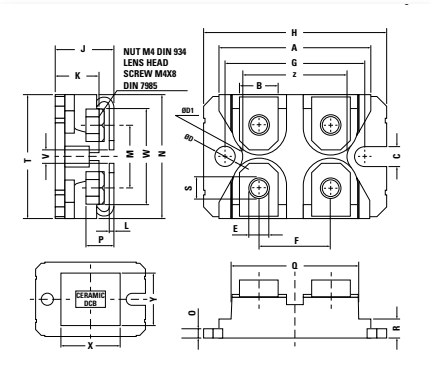

Dim	Millimeters		Inches	
	min	max	min	max
A	31.50	32.26	1.240	1.270
B	7.87	8.38	0.310	0.330
C	3.94	4.19	0.155	0.165
D	3.94	4.19	0.155	0.165
D1	3.81	3.98	0.150	0.157
E	4.06	4.27	0.160	0.168
F	14.91	15.11	0.587	0.595
G	30.12	30.30	1.186	1.193
H	37.80	38.23	1.489	1.505
J	11.81	12.22	0.465	0.481
K	9.40	9.65	0.370	0.380
L	0.76	0.84	0.030	0.033
M	12.60	12.85	0.496	0.506
N	25.15	25.42	0.990	1.001
O	2.54	2.64	0.100	0.105
P	4.95	5.97	0.195	0.235
Q	26.54	26.90	1.045	1.059
R	4.06	4.32	0.160	0.170
S	4.72	4.85	0.186	0.191
T	24.59	25.07	0.968	0.987
U	-0.03	0.05	-0.001	0.002
V	3.30	4.06	0.130	0.160
W	19.81	21.08	0.780	0.830
X	19.56	20.57	0.770	0.810
Y	17.27	18.29	0.680	0.720
Z	22.48	22.66	0.885	0.892

X030a SMPD-B
Weight = 8.5 g

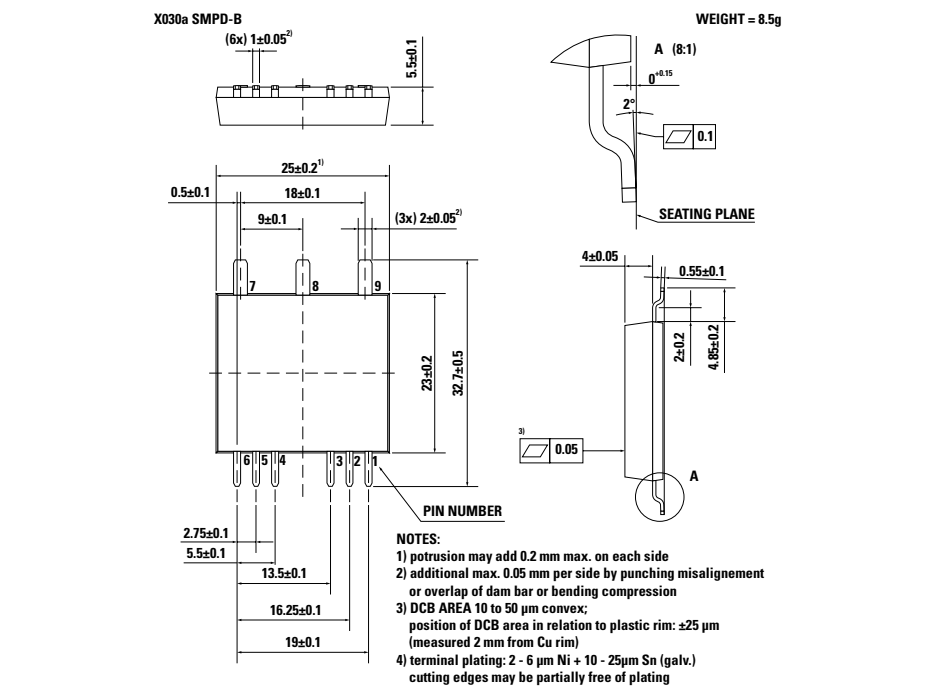

NOTES:
1) potrusion may add 0.2 mm max. on each side
2) additional max. 0.05 mm per side by punching misalignement or overlap of dam bar or bending compression
3) DCB AREA 10 to 50 µm convex; position of DCB area in relation to plastic rim: ±25 µm (measured 2 mm from Cu rim)
4) terminal plating: 2 - 6 µm Ni + 10 - 25µm Sn (galv.) cutting edges may be partially free of plating

©2023 Littelfuse, Inc

X031...* SMPD- x
Weight = 8.5 g*

* See data sheet for pin arrangement

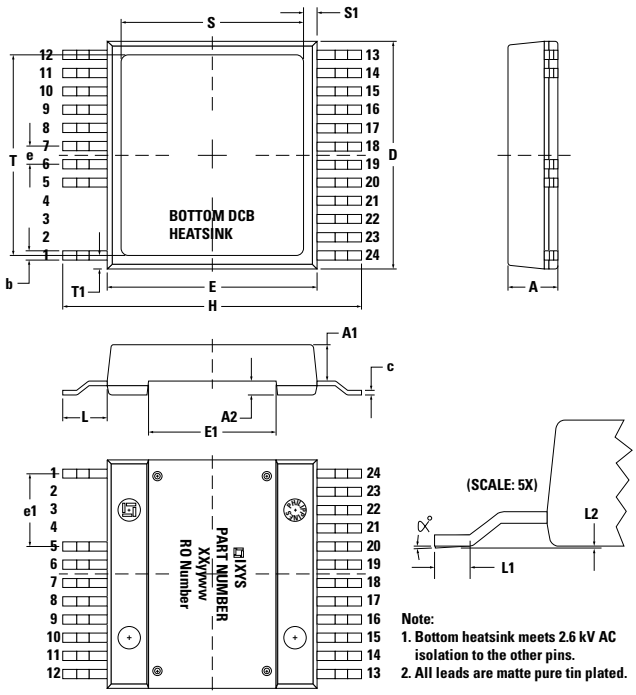

Note:
1. Bottom heatsink meets 2.6 kV AC isolation to the other pins.
2. All leads are matte pure tin plated.

Dim	Millimeters		Inches	
	min	max	min	max
A	5.30	5.70	0.209	0.224
A1	3.90	4.10	0.154	0.161
A2	1.40	1.60	0.055	0.063
b	0.90	1.15	0.035	0.045
c	0.45	0.65	0.018	0.026
D	24.80	25.25	0.976	0.994
E	22.80	23.25	0.898	0.915
E1	13.80	14.20	0.543	0.559
e	2.00	BSC	0.079	BSC
e1	8.00	BSC	0.315	BSC
H	32.30	33.30	1.272	1.311
L	4.60	5.30	0.181	0.209
L1	1.30	1.70	0.051	0.067
L2	0.00	0.15	0.000	0.006
S	18.85	20.12	0.742	0.792
S1	1.45	2.08	0.057	0.082
T	20.90	22.17	0.823	0.873
T1	1.42	2.03	0.056	0.080
a	4°	–	4°	–

X032...* MiniSMPD- x

* See data sheet for pin arrangement

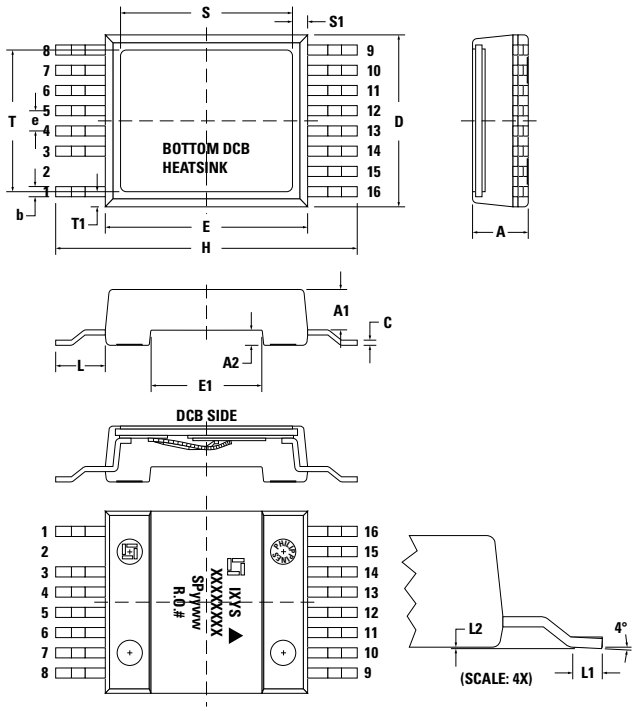

Dim	Millimeters		Inches	
	min	max	min	max
A	5.30	5.70	0.209	0.224
A1	3.90	4.10	0.154	0.161
A2	1.40	1.60	0.055	0.063
b	0.90	1.15	0.035	0.045
c	0.45	0.65	0.018	0.026
D	16.80	17.20	0.661	0.677
E	19.80	20.20	0.780	0.795
E1	10.80	11.20	0.425	0.441
e	2.00 BSC		0.079 BSC	
H	29.50	30.10	1.161	1.185
L	4.60	5.30	0.181	0.209
L1	1.30	1.70	0.051	0.067
L2	0.00	0.15	0.000	0.006
S	16.80	17.20	0.661	0.677
S1	1.30	1.70	0.051	0.067
T	13.80	14.20	0.543	0.559
T1	1.30	1.70	0.051	0.067

Note:
1. All leads are matte pure tin plated.
2. Cu surface of bottom DCB is pre-Ni plated unless otherwise.
3. Cu surface of bottom DCB is electrically isolated 2.500V AC from all other leads.
4. Unless other specified, pin out are as follows:
   Pin #1 - Gate
   Pin #3 - Gate return or source
   Pin #4 through #8 - Source (emitter)
   Pin #9 through #16 - Drain (collector)

X101 ECO-PAC1
Weight = 19 g

* See data sheet for pin arrangement

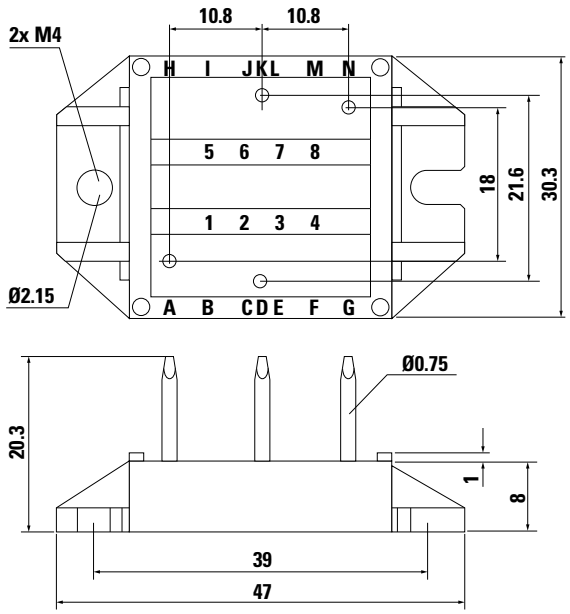

X102 ECO-PAC2
Weight = 23 g

* See data sheet for pin arrangement

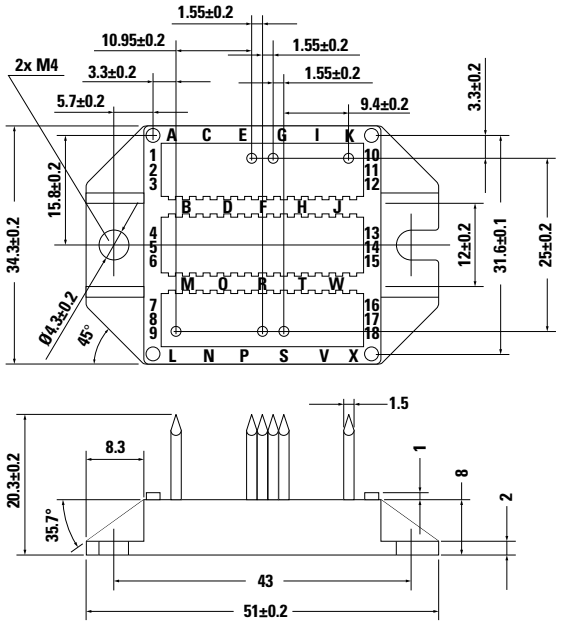

X103 V1-A-Pack
Weight = 37 g

* See data sheet for pin arrangement

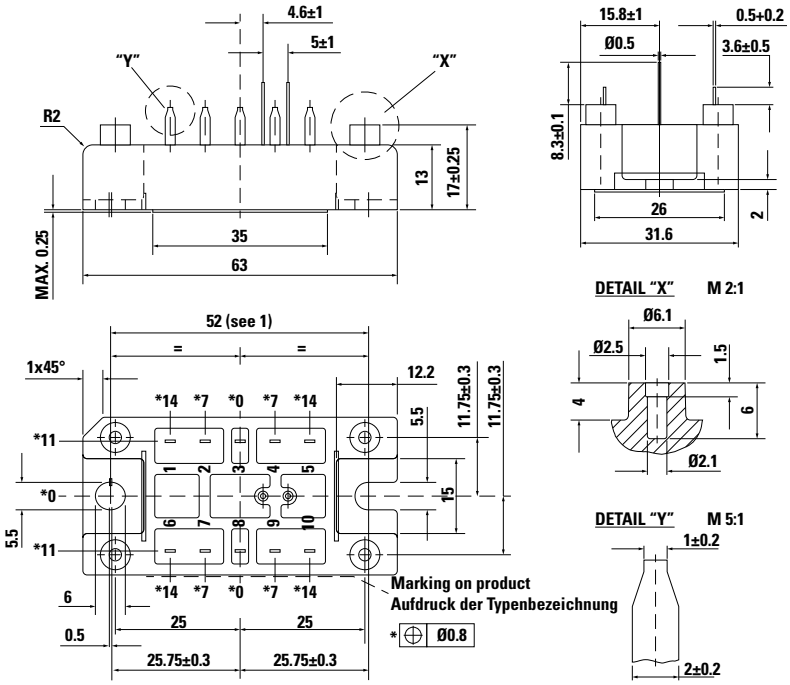

©2023 Littelfuse, Inc

X104 V2-Pack
Weight = 76 g

* See data sheet for pin arrangement

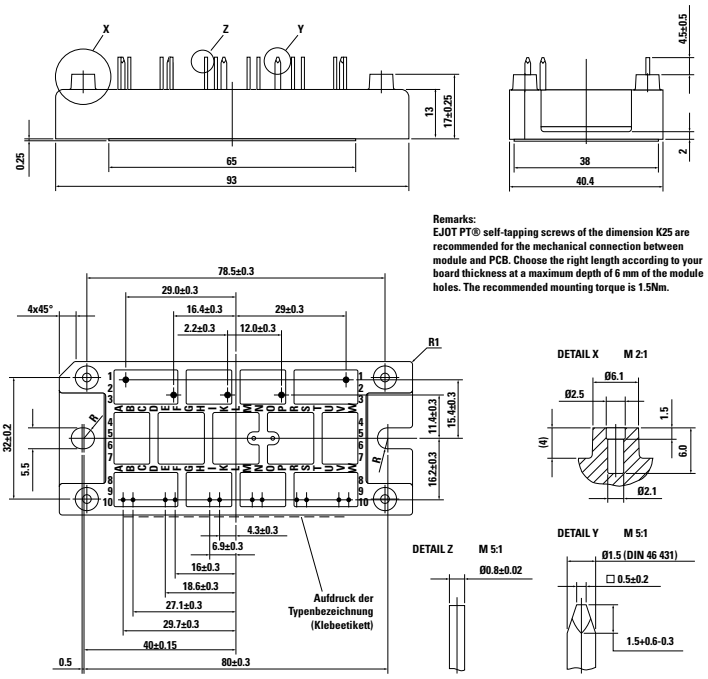

X105 V1-B-Pack

a: pin length = 31 mm Weight = 30 g
b: pin length = 16 mm Weight = 28 g

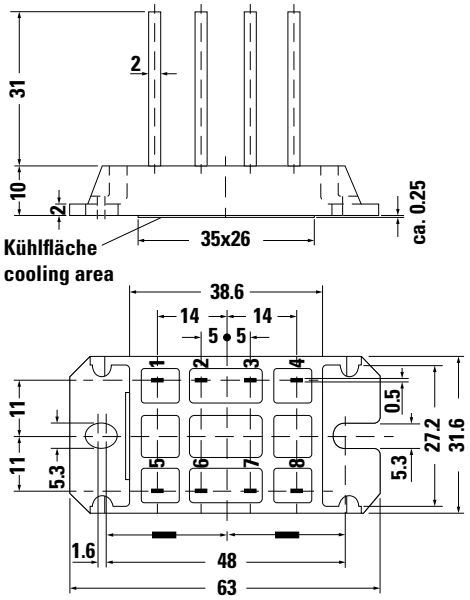

X105c V1-B-Pack
Weight = 25 g

* See data sheet for pin arrangement

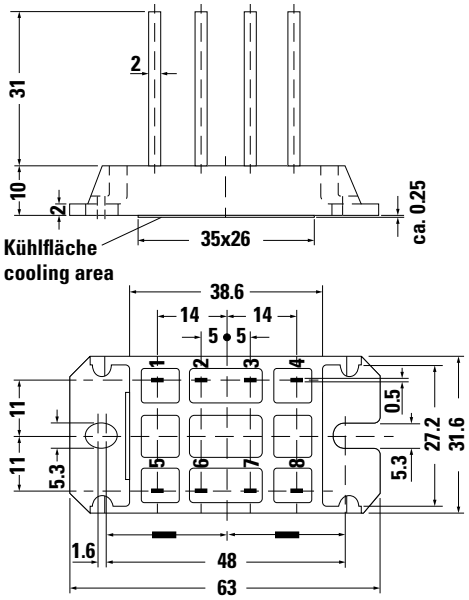

X112 E2-Pack
Weight = 176 g

* See data sheet for pin arrangement

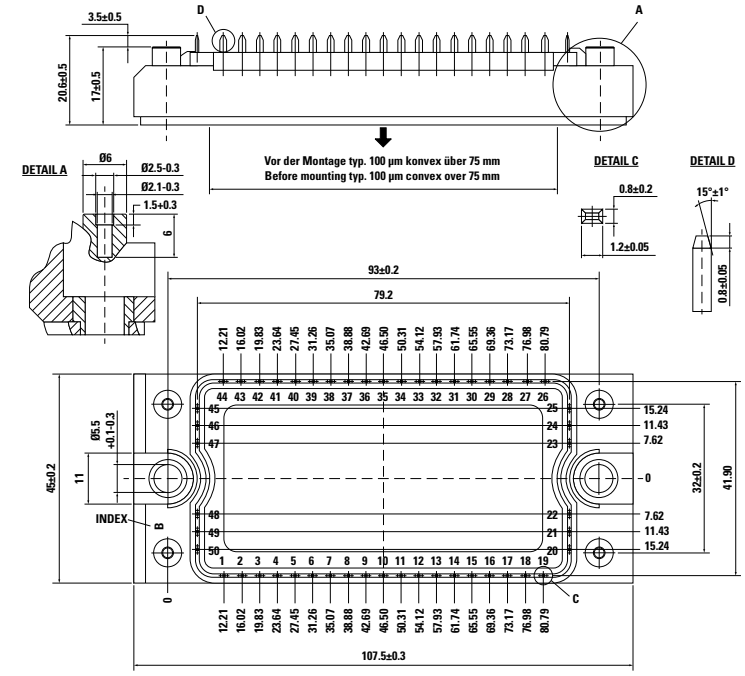

X112a E2-Pack PFP
Weight = 176 g

* See data sheet for pin arrangement

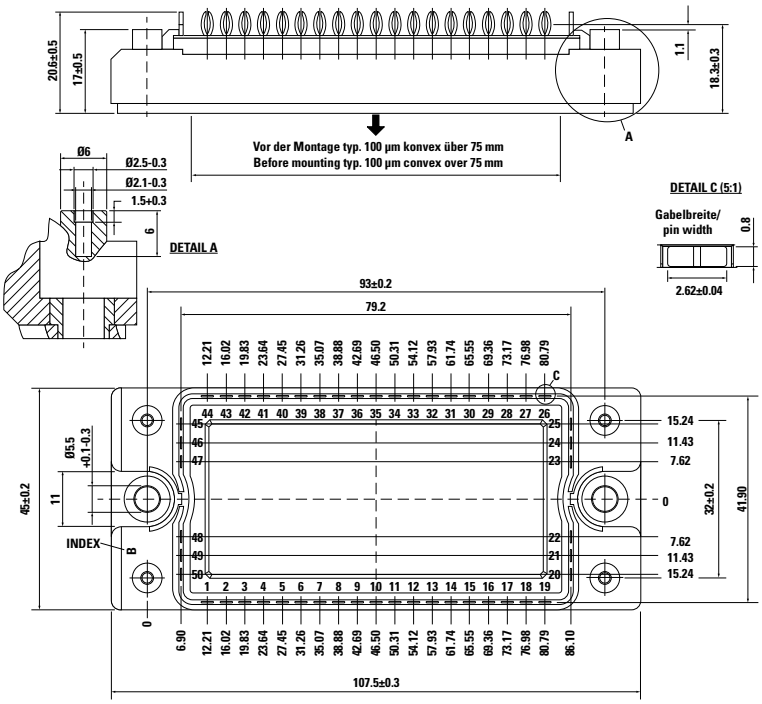

©2023 Littelfuse, Inc

X113 E3-Pack
Weight = 270 g

* See data sheet for pin arrangement

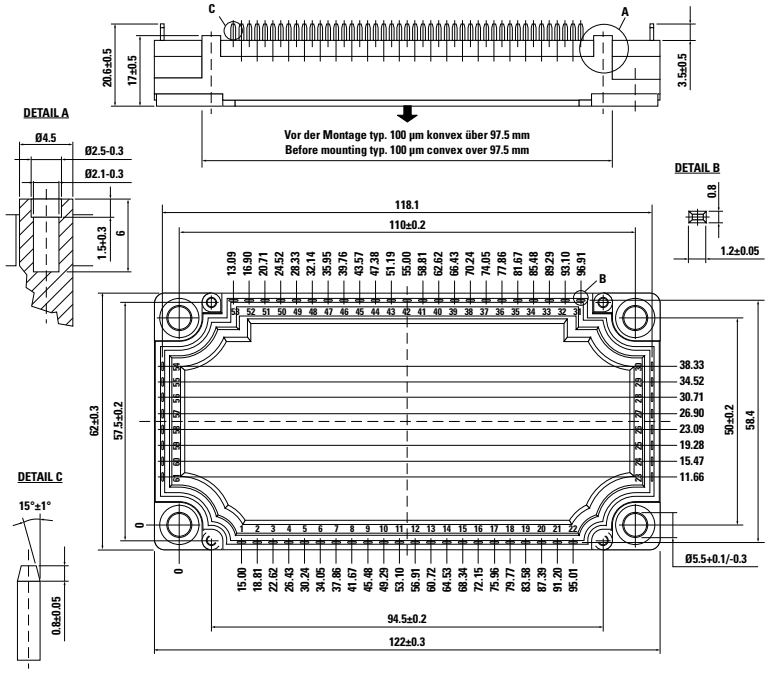

X113a E3-Pack PFP
Weight = 270 g

* See data sheet for pin arrangement

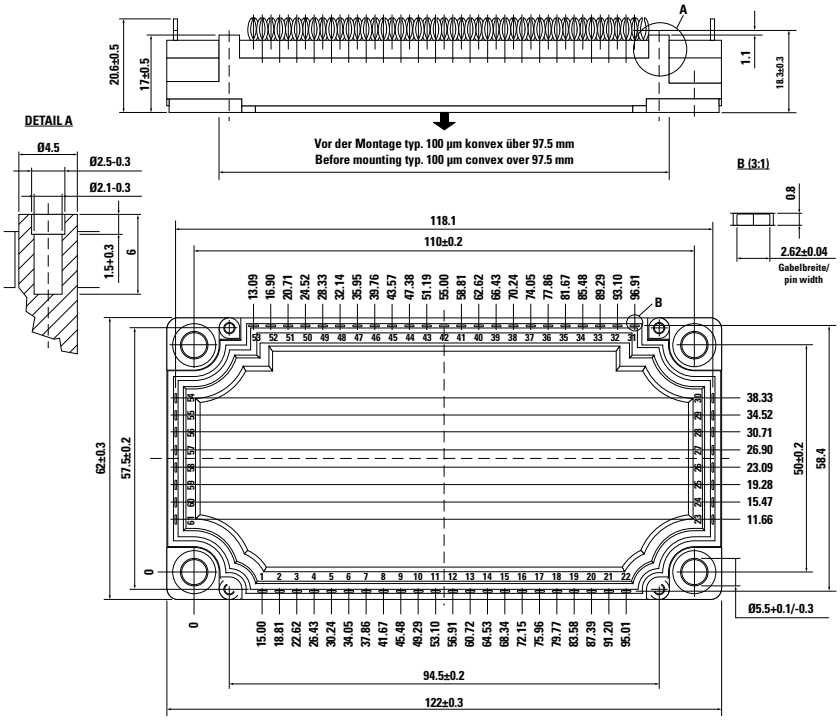

Outline Drawings

X115 FO-A
Weight = 15 g

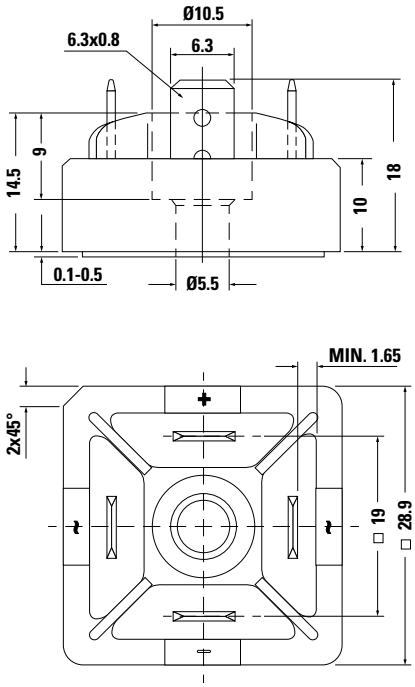

X116 FO-B

a: VUO — Weight = 20 g
b: w/o terminal C (VBO) — Weight = 19 g

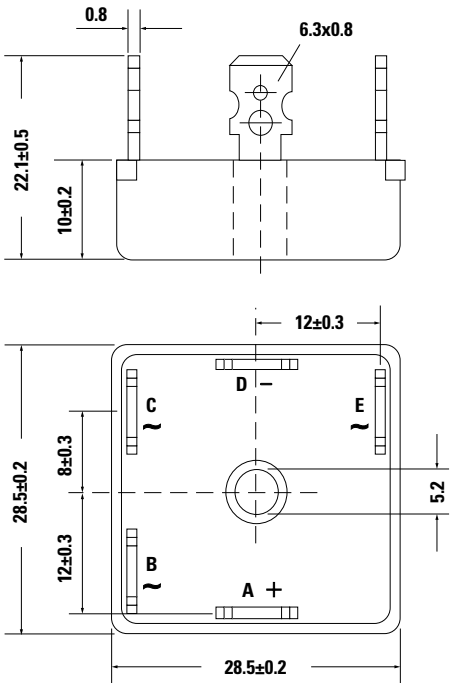

X122 PWS-D

a: VUO — Weight = 159 g
b: w/o terminal C (VBO) — Weight = 153 g

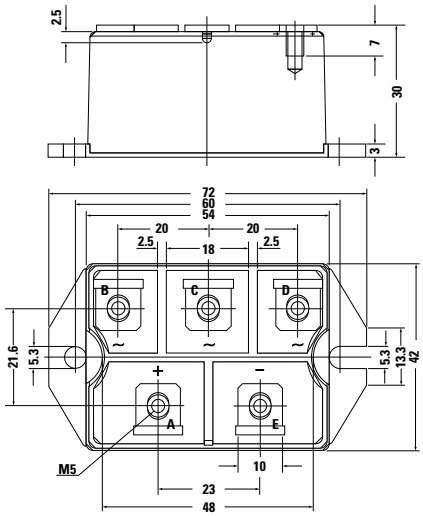

X122 PWS-D Flat

c: VUO — Weight = 118 g

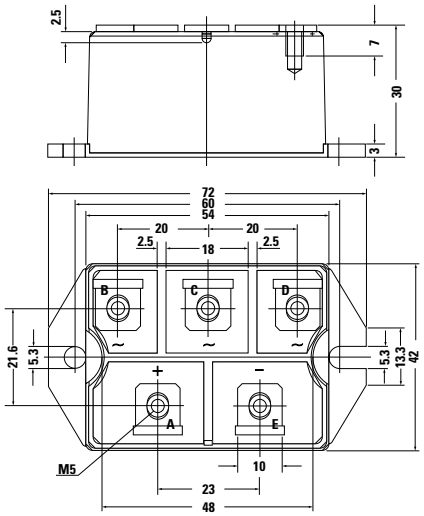

X123 PWS-E

a: VTO — Weight = 284 g
b: w/o terminal 4, 5 & 6 (VVZ) — Weight = 284 g
c: w/o terminal 1, 2, 3, 4, 5 & 6 (VUO) — Weight = 284 g
d: w/o terminal D, 3, 4, 5 & 6 (VHF) — Weight = 273 g
e: w/o terminal D, 1, 2, 3, 4, 5 & 6 (VBO) — Weight = 273 g

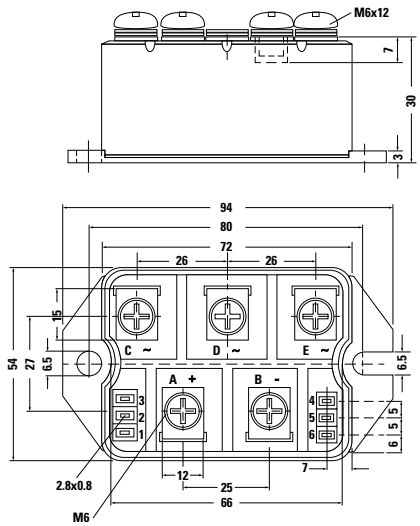

©2023 Littelfuse, Inc

X123 PWS-E Flat

w/o terminal 1, 2, 3, 4, 5 & 6 (VUO) Weight = 159 g

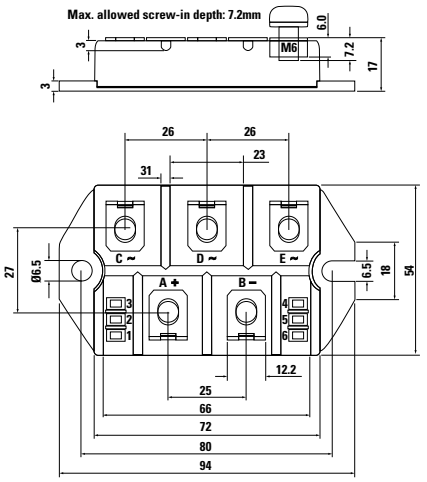

X125 TO-240AA

a, z: + Kelvin contact (MCC) Weight = 81 g
b, y: + Kelvin contact, w/o pin 6 & 7 (MCD) Weight = 81 g
c: w/o Kelvin contact 4 & 7 (MCC) Weight = 81 g
d: w/o Kelvin contact 4, 7 & pin 6 (MCD) Weight = 81 g
e: w/o terminal D, 1, 2, 3, 4, 5 & 6 (VBO) Weight = 81 g
y, z: w/o metal inserts

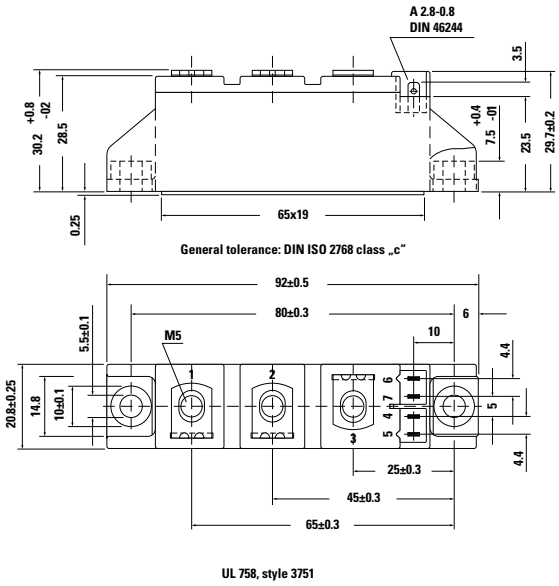

X126 Y4-M6

a, z: + Kelvin cont., w/o pin 8 up to 11 (MCC) Weight = 131 g
b, y: + Kelvin cont., w/o pin 6 up to 11 (MCD) Weight = 131 g
c: w/o pin 4 up to 11 (MDD) Weight = 126 g
d: w/o terminal 2 & pin 4 up to 11 (MEO) Weight = 108 g
y, z: with metal inserts

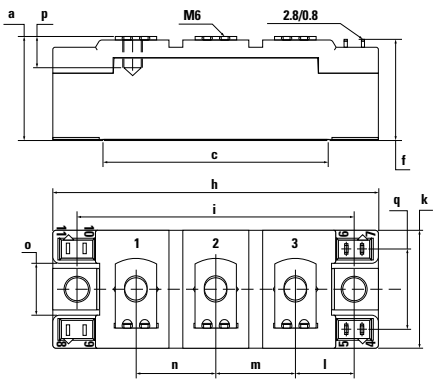

Dim	Millimeters		Inches	
	min	max	min	max
a	30.0	30.6	1.181	1.205
c	64.0	65.0	2.520	2.559
f	28.6	29.2	1.126	1.150
h	93.5	94.5	3.681	3.720
i	79.5	80.5	3.130	3.169
j	4.8	5.2	0.189	0.205
k	33.4	34.0	1.315	1.339
l	16.7	17.3	0.657	0.681
m	22.7	23.3	0.894	0.917
n	22.7	23.3	0.894	0.917
o	14.0	15.0	0.551	0.591
p	typ. 10.5		typ. 0.413	
q	22.8	23.3	0.898	0.917

X127 Y4-M5

a: w/o pin 8 up to 11 (MII) Weight = 110 g
b: w/o pin 6 up to 11 (MID) Weight = 108 g
c: w/o pin 4, 5 & 8 up to 11 (MDI) Weight = 108 g

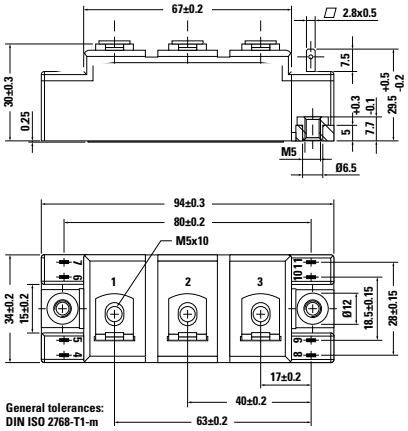

X127 Y4-M5-A

d: w/o pin 8 up to 11 (..PF..) Weight = 170 g
e: w/o pin 6 up to 11 (..RF..) Weight = 168 g
f: w/o pin 4, 5 & 8 up to 11 (..QF..) Weight = 166 g

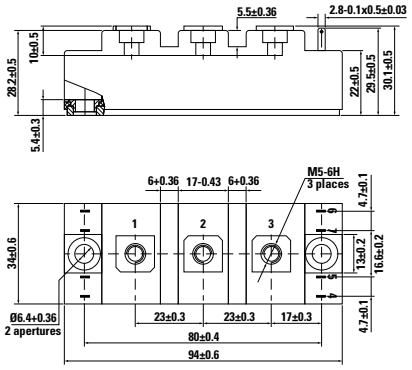

X129 Y2-DCB

a: + Kelvin contact (MCC) Weight = 245 g
b: + Kelvin contact, w/o pin 6 & 7 (MCD) Weight = 245 g
c: w/o pin 4, 5, 6 & 7 (MDD) Weight = 244 g

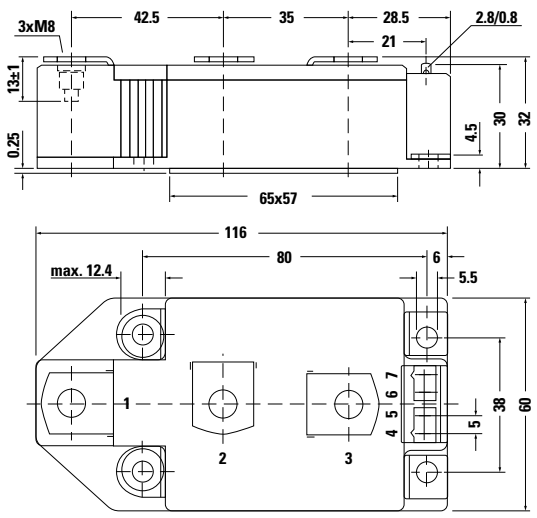

X131 Y1-CU

a: + Kelvin contact (MCC) Weight = 680 g
b: + Kelvin contact, w/o pin 6&7 (MCD) Weight = 680 g
c: w/o pin 4, 5, 6 & 7 (MDD) Weight = 680 g

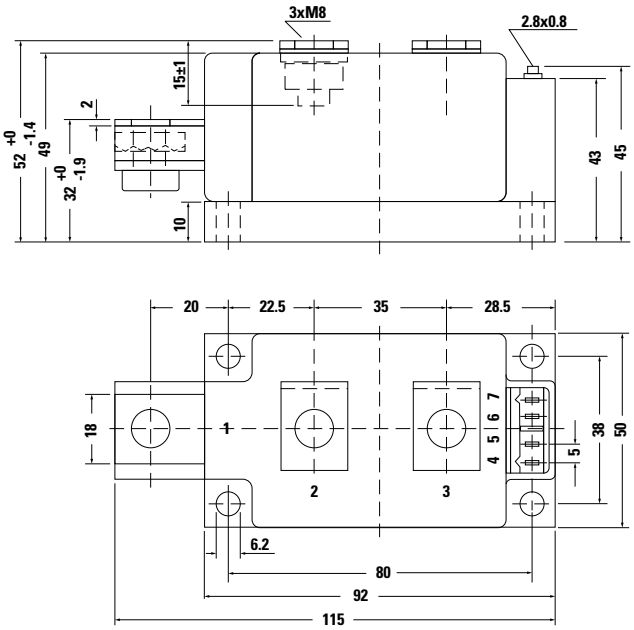

X132 Y1-2-CU

a: + Kelvin contact w/o pin 6&7 (MCO) Weight = 650 g
b: w/o pin 4, 5, 6 & 7 (MDO)

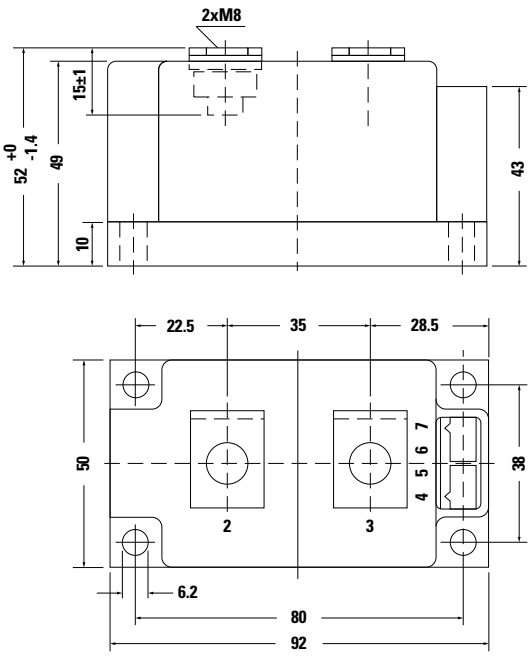

©2023 Littelfuse, Inc

X141 SimBus A

a: + Kelvin contact (MCC)
b: + Kelvin contact, w/o pin 7 & 8 (MCD)
c: w/o pin 5, 6, 7 & 8 (MDD)

Weight = 152 g

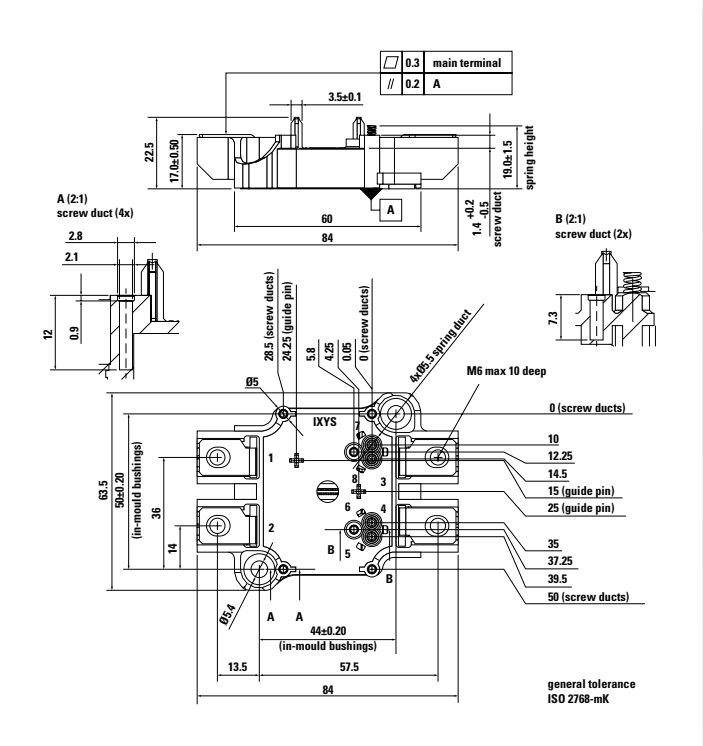

X142 ComPack

a: + Kelvin contact (MCC)
b: + Kelvin contact, w/o pin 6 & 7 (MCD)
c: w/o pin 4, 5, 6 & 7 (MDD)

Weight = 500 g

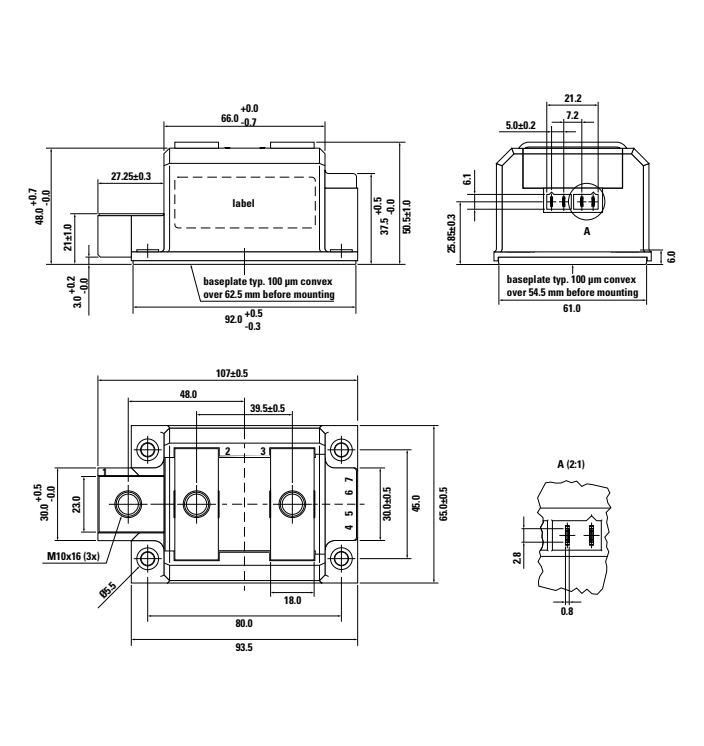

X143 SimBus F
Weight = 150 g

* See data sheet for pin arrangement

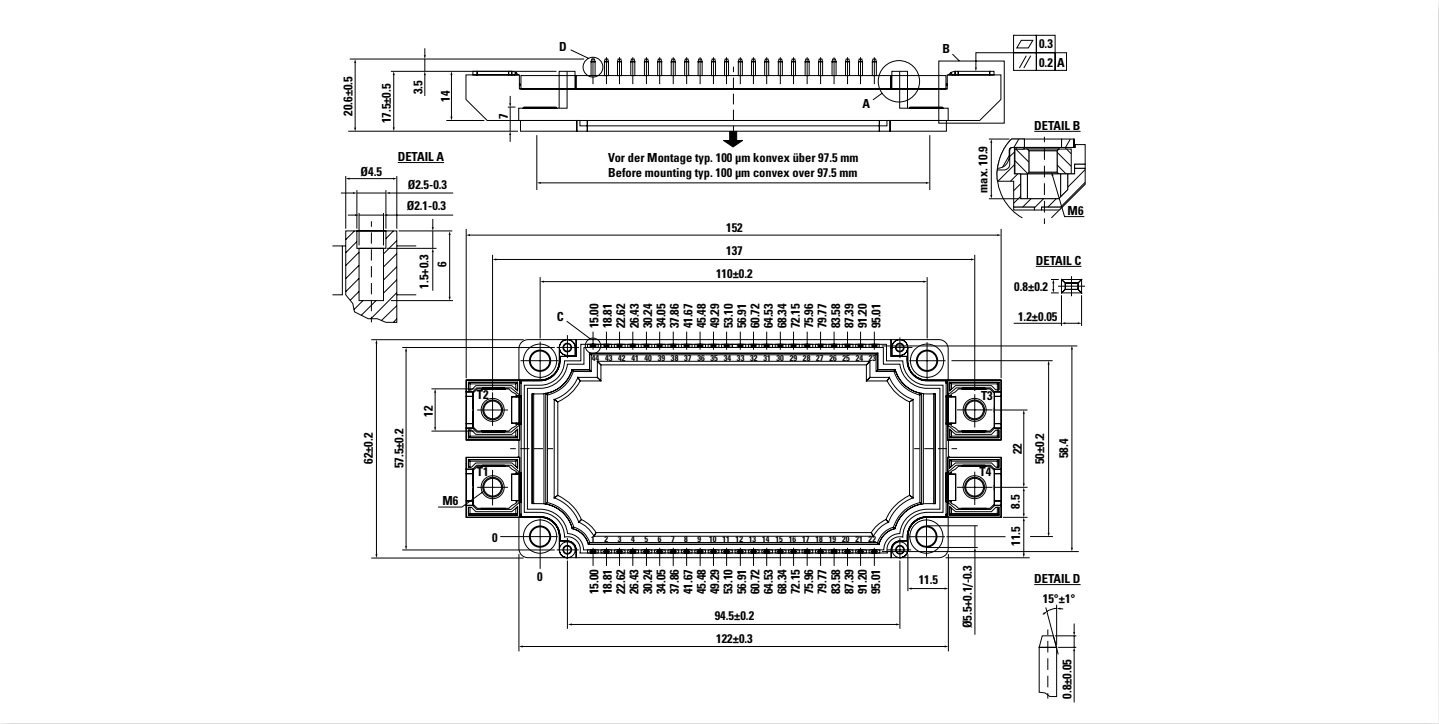

X143a SimBus F PFP
Weight = 150 g

* See data sheet for pin arrangement

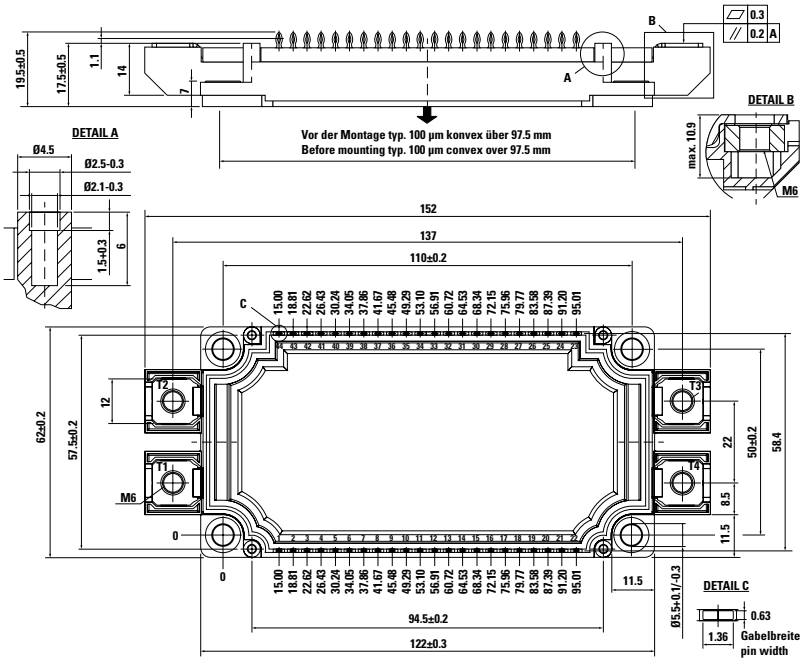

Modul-34mm
Weight = 160 g

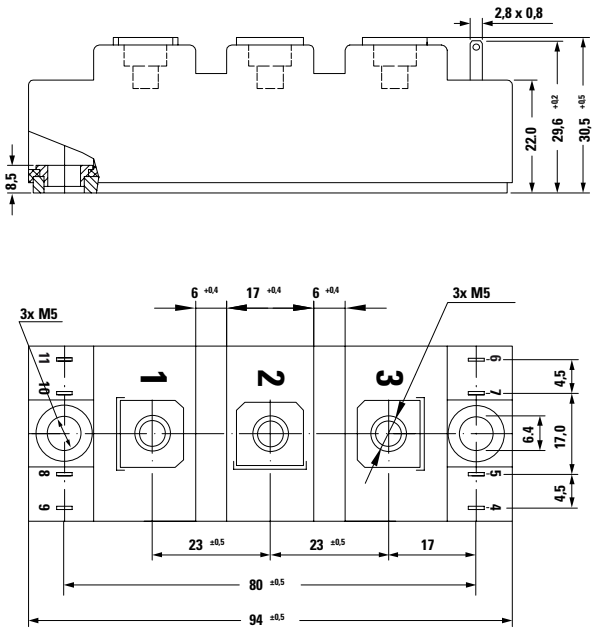

X200 Metal-can
Weight = 2.5 g

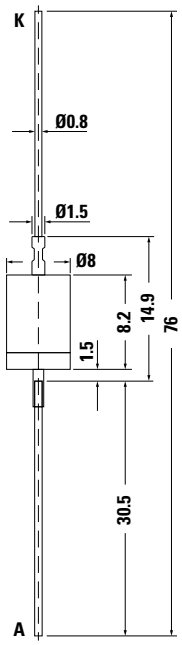

©2023 Littelfuse, Inc

X201 FP-Case (oilproof)
Weight = 0.9 g

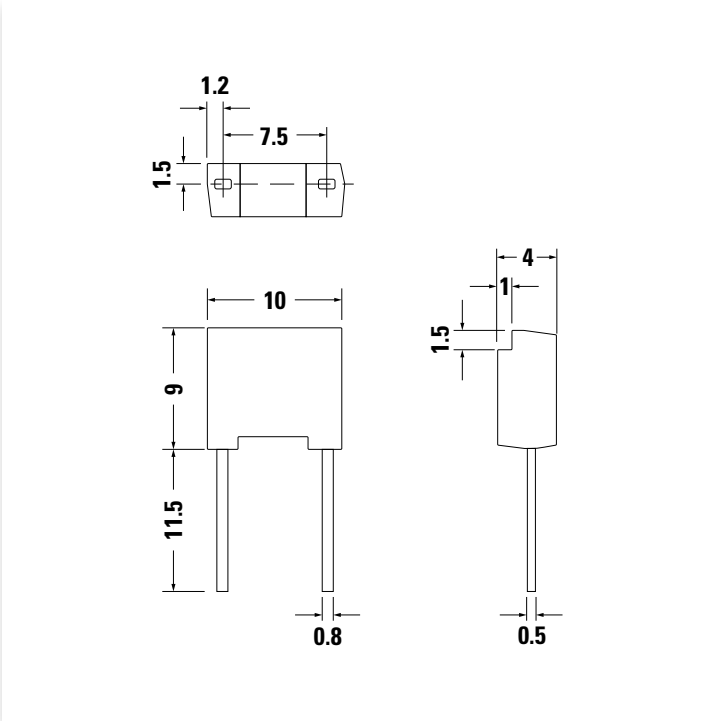

X202 BOD-Package
Weight = 9.5 g

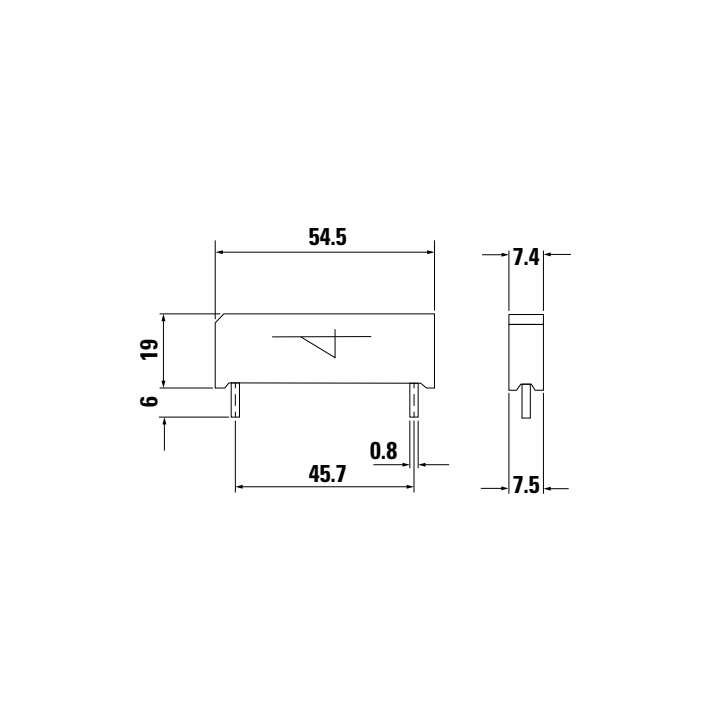

X204 DO-203 AA [M] (DO-4)
Weight = 6 g

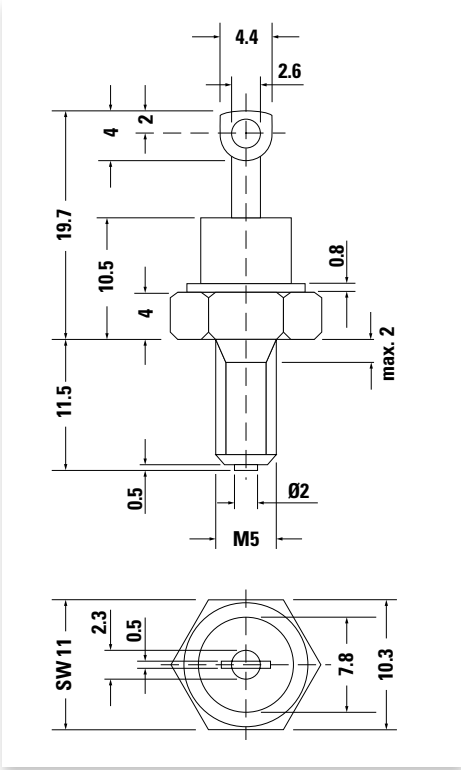

X205 DO-203 AA [UNF]
Weight = 5.5 g
(DO-4)

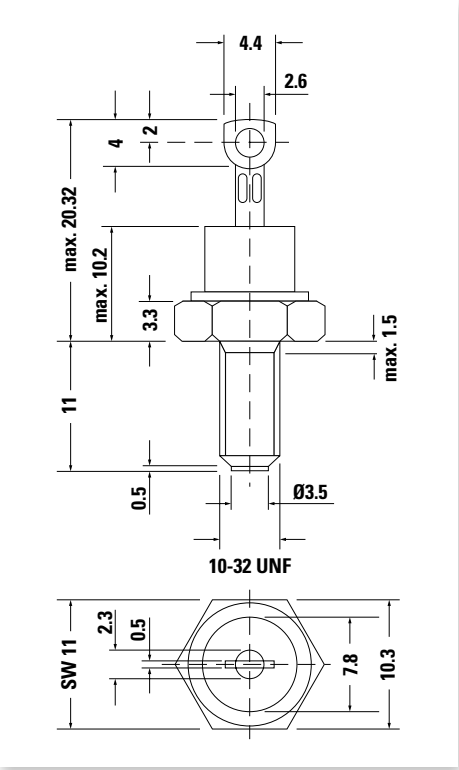

X206a DO-203 AB [UNF] (DO-5)
X206b DO-203 AB [M] (DO-5)
Weight = 14 g

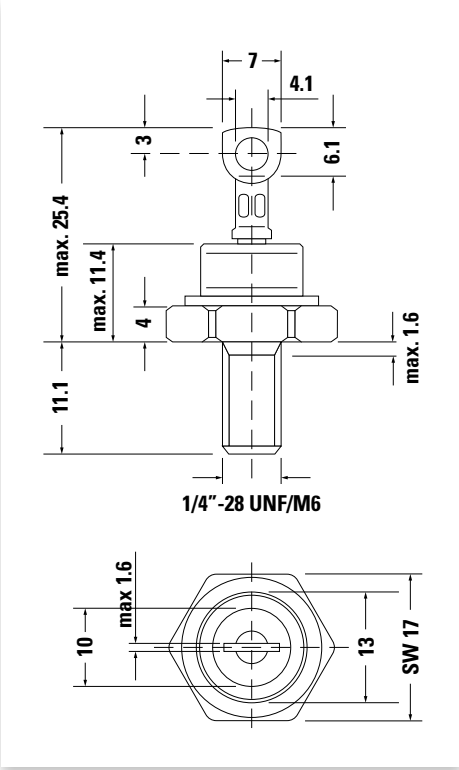

Outline Drawings

X207 DO-203 AB (DO-5)
Weight = 20 g

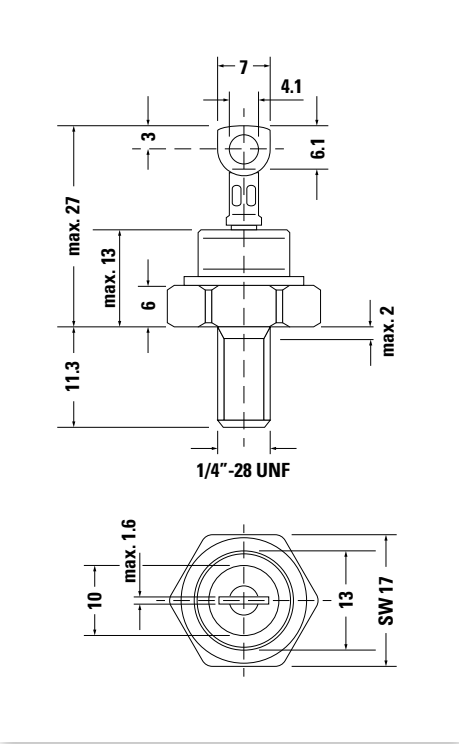

X209 TO-208 AA (TO-48)
Weight = 11.6 g

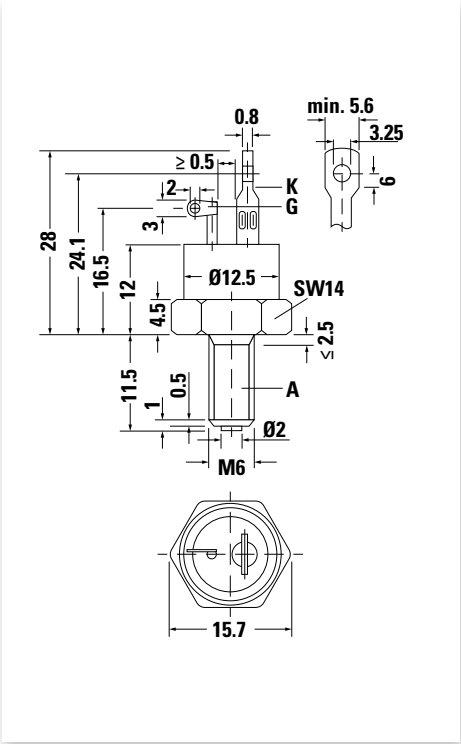

X210 TO-208 AC (TO-65)
Weight = 21.7 g

* See data sheet for pin arrangement

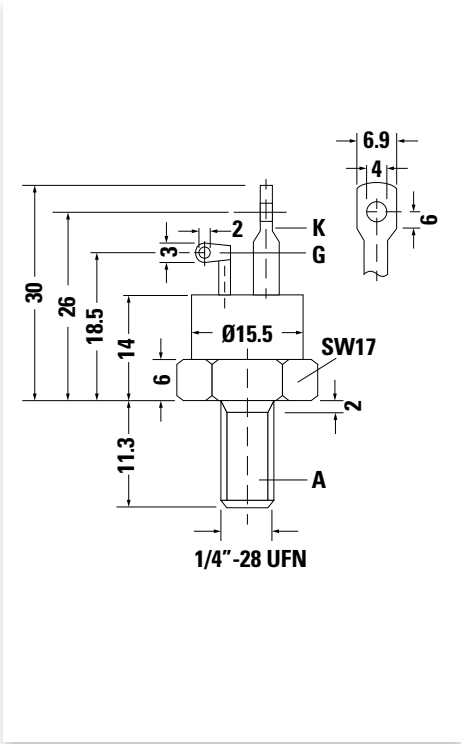

X207 DO-203 AB (DO-5)
Weight = 20 g

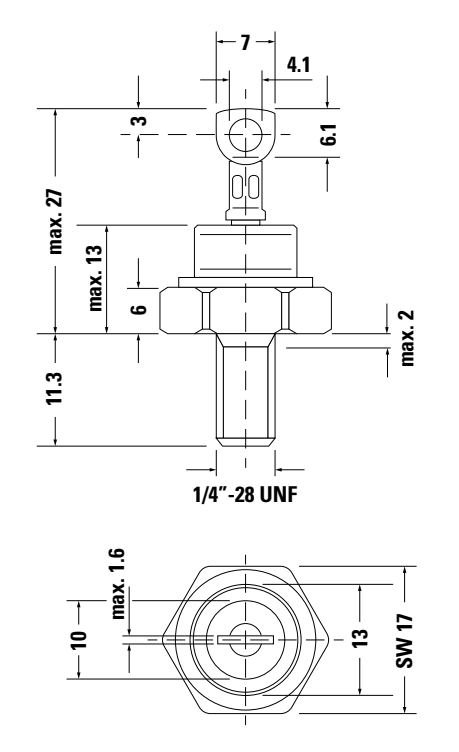

X252 UG
Weight = 155 g

* See data sheet for pin arrangement

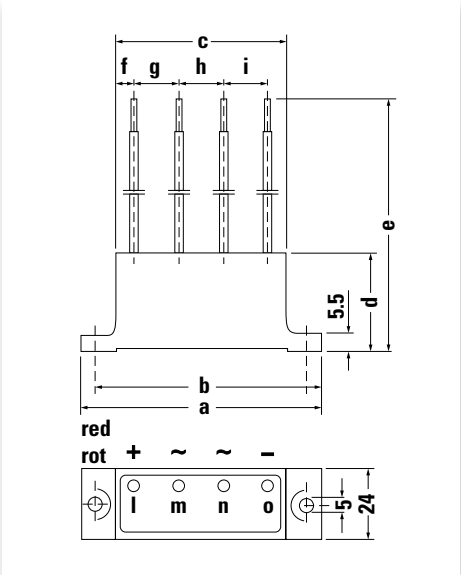

X253a UG
Weight = 310 g

b: w/o middle terminal

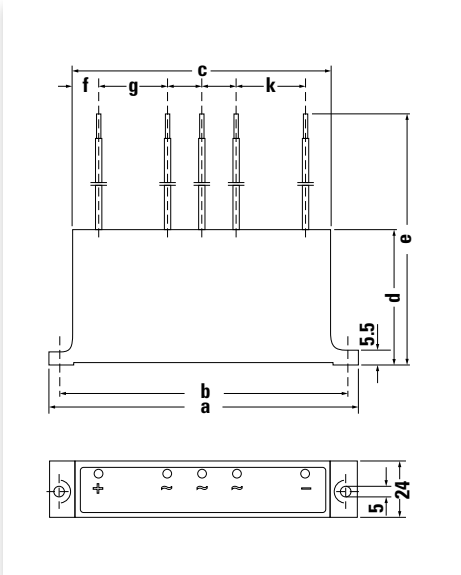

Type	a	b	c	d	e	f	g	h	i	k
UGB 3132 AD	80	70	57	58.5	260	6	15	15	15	–
UGB 6124 AG	135	125	112	58.5	260	11	32.5	25	32.5	–
UGD 6123 AG	135	125	112	58.5	260	8	30	18	18	30
UGD 8124 AG	135	125	112	58.5	260	8	30	18	18	30

Dimensions in mm

©2023 Littelfuse, Inc

X254 VG-A
Weight = 61 g

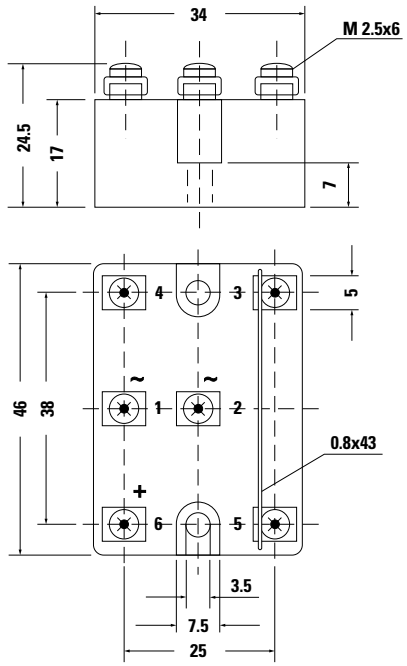

X255 VG-B
Weight = 87 g

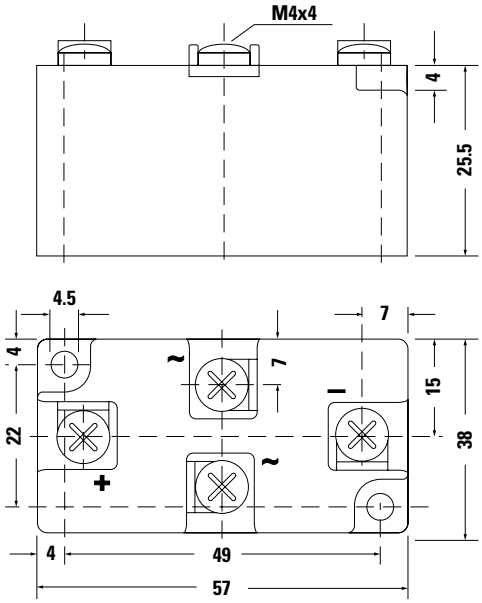

D5 DE475

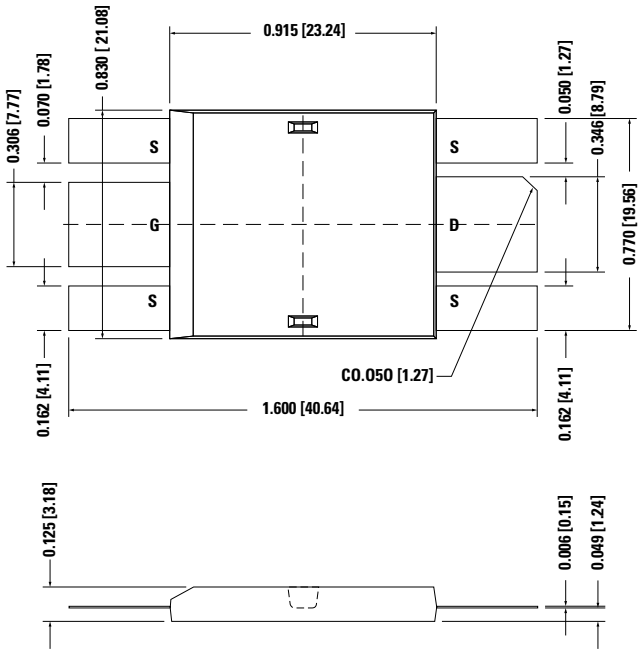

Outline Drawings

L001 SOT-223
Weight = 0.11 g

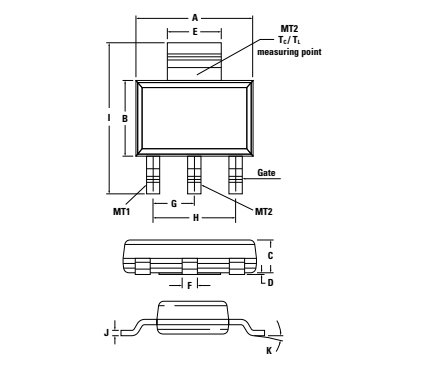

Dim	Millimeters			Inches		
	min	typ	max	min	typ	max
A	6.30	6.50	6.70	0.248	0.256	0.264
B	3.30	3.50	3.70	0.130	0.138	0.146
C	–	–	1.80	–	–	0.071
D	0.02	–	0.10	0.001	–	0.004
E	2.90	3.00	3.15	0.114	0.118	0.124
F	0.60	0.70	0.85	0.024	0.027	0.034
G	–	2.30	–	–	0.090	–
H	–	4.60	–	–	0.181	–
I	6.70	7.00	7.30	0.264	0.276	0.287
J	0.24	0.26	0.35	0.009	0.010	0.014
K	10° max					

L002 TO-218AC
Weight = 5 g

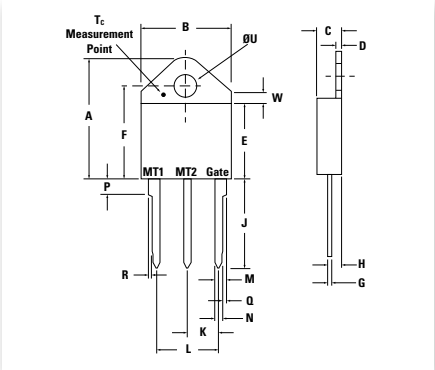

Dim	Millimeters		Inches	
	min	max	min	max
A	20.57	21.21	0.810	0.835
B	15.49	16.00	0.610	0.630
C	4.52	4.78	0.178	0.188
D	1.40	1.78	0.055	0.070
E	12.37	12.62	0.487	0.497
F	16.13	16.64	0.635	0.655
G	0.56	0.74	0.022	0.029
H	1.91	2.41	0.075	0.095
J	14.61	15.88	0.575	0.625
K	5.36	5.56	0.211	0.219
L	10.72	11.10	0.422	0.437
M	1.47	1.73	0.058	0.068
N	1.14	1.40	0.045	0.055
P	2.41	2.92	0.095	0.115
Q	0.20	0.41	0.008	0.016
R	0.20	0.41	0.008	0.016
U	4.10	4.20	0.164	0.165
W	2.17	2.42	0.085	0.095

L002a TO-218 x
Weight = 5.2 g

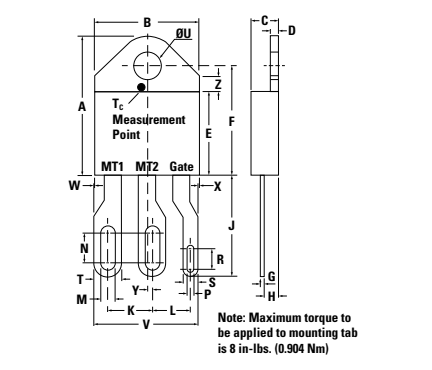

Dim	Millimeters		Inches	
	min	max	min	max
A	20.57	21.21	0.810	21.210
B	15.49	16.00	0.610	16.000
C	4.52	4.78	0.178	4.780
D	1.40	1.78	0.055	1.780
E	12.37	12.62	0.487	12.620
F	16.13	16.64	0.635	16.640
G	0.56	0.74	0.022	0.740
H	1.91	2.41	0.075	2.410
J	14.61	15.88	0.575	15.880
K	6.50	6.71	0.256	6.710
L	5.58	5.79	0.220	5.790
M	2.03	2.24	0.080	2.240
N	4.29	4.49	0.169	4.490
P	0.86	1.07	0.034	1.070
R	2.87	3.07	0.113	3.070
S	2.18	2.44	0.086	2.440
T	3.96	4.22	0.156	4.220
U	0.41	0.42	0.164	0.420
V	15.31	15.70	0.603	15.700
W	0.00	0.13	0.000	0.130
X	0.07	0.30	0.003	0.300
Y	0.71	0.81	0.028	0.810
Z	2.17	2.42	0.085	2.420

L003a DO-214AA
Weight = 0.1 g

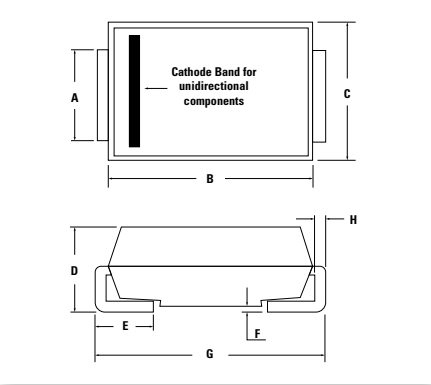

Dim	Millimeters		Inches	
	min	max	min	max
A	1.950	2.200	0.077	0.086
B	4.060	4.570	0.160	0.180
C	3.300	3.940	0.130	0.155
D	2.130	2.440	0.084	0.096
E	0.760	1.520	0.030	0.060
F	–	0.203	–	0.008
G	5.210	5.590	0.205	0.220
H	0.152	0.305	0.006	0.012

L003b DO-214AB
Weight = 0.2 g

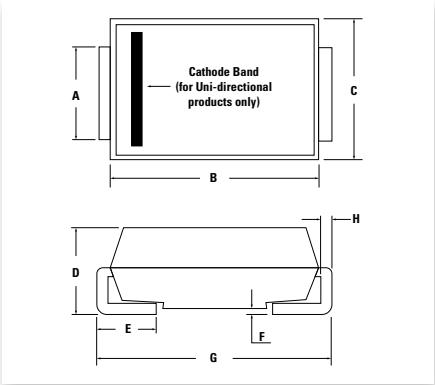

Dim	Millimeters		Inches	
	min	max	min	max
A	2.900	3.200	0.114	0.126
B	6.600	7.110	0.260	0.280
C	5.590	6.220	0.220	0.245
D	2.060	2.620	0.079	0.103
E	0.760	1.520	0.030	0.060
F	–	0.203	–	0.008
G	7.750	8.130	0.305	0.320
H	0.152	0.305	0.006	0.012

L004 TO-252AA
Weight = 0.3 g

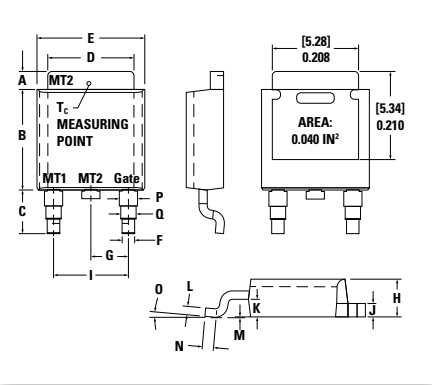

Dim	Millimeters			Inches		
	min	nom	max	min	nom	max
A	0.94	1.01	1.09	0.037	0.040	0.043
B	5.97	6.16	6.22	0.235	0.243	0.245
C	2.69	2.74	2.87	0.106	0.108	0.113
D	5.21	5.29	5.41	0.205	0.208	0.213
E	6.48	6.65	6.73	0.255	0.262	0.265
F	0.69	0.80	0.84	0.027	0.031	0.033
G	2.21	2.28	2.36	0.087	0.090	0.093
H	2.16	2.33	2.41	0.085	0.092	0.095
I	4.47	4.55	4.67	0.176	0.179	0.184
J	0.46	0.51	0.58	0.018	0.020	0.023
K	0.90	0.95	1.00	0.04	0.04	0.04
L	0.46	0.51	0.58	0.018	0.020	0.023
M	0.00	0.00	0.10	0.000	0.000	0.004
N	0.53	0.67	0.69	0.02	0.03	0.03
O	0°	0°	5°	0°	0°	5°
P	1.06	1.20	1.32	0.042	0.047	0.052
Q	0.86	1.00	1.11	0.034	0.039	0.044

©2023 Littelfuse, Inc

L005a TO-220AB (NON-ISO)
Weight = 2 g

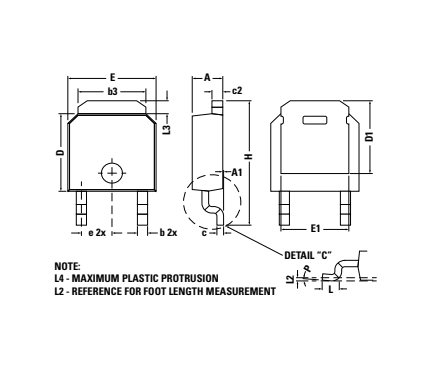

Dim	Millimeters			Inches		
	min	nom	max	min	nom	max
A	2.16	2.29	2.41	0.085	0.090	0.095
A1	0	0.08	0.13	0	0.003	0.005
b	0.64	0.76	0.89	0.025	0.030	0.035
b3	4.95	5.08	5.46	0.195	0.200	0.215
c	0.46	0.51	0.61	0.018	0.020	0.024
C2	0.46	0.81	0.89	0.018	0.032	0.035
D	5.97	6.10	6.22	0.235	0.240	0.245
D1	5.21	–	–	0.205	–	–
E	6.35	6.60	6.73	0.250	0.260	0.265
E1	4.32	–	–	0.170	–	–
e	2.29 BSC			0.090 BSC		
H	9.40	9.83	10.41	0.370	0.387	0.410
L	1.02	1.14	1.27	0.040	0.045	0.050
L2	0.25 BSC			0.010 BSC		
L3	0.89	–	1.27	0.035	–	0.050
P	0°	–	8°	0°	–	8°

L005a TO-220AB (NON-ISO)
Weight = 2 g

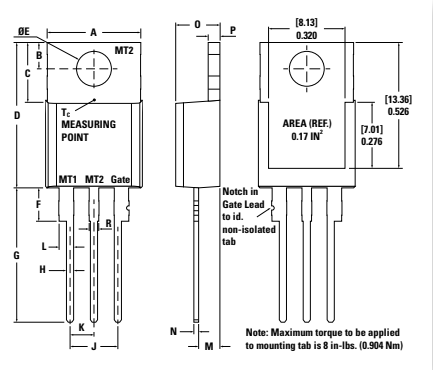

Dim	Millimeters		Inches	
	min	max	min	max
A	9.65	10.67	0.380	0.420
B	2.67	2.92	0.105	0.115
C	5.84	6.35	0.230	0.250
D	14.99	15.75	0.590	0.620
E	3.61	3.73	0.142	0.147
F	2.79	3.30	0.110	0.130
G	13.72	14.61	0.540	0.575
H	0.64	0.89	0.025	0.035
J	4.95	5.21	0.195	0.205
K	2.41	2.67	0.095	0.105
L	1.52	1.91	0.060	0.075
M	2.16	2.41	0.085	0.095
N	0.46	0.61	0.018	0.024
O	4.52	4.78	0.178	0.188
P	1.14	1.52	0.045	0.060
R	0.97	1.22	0.038	0.048

L005b TO-220AC
Weight = 2 g

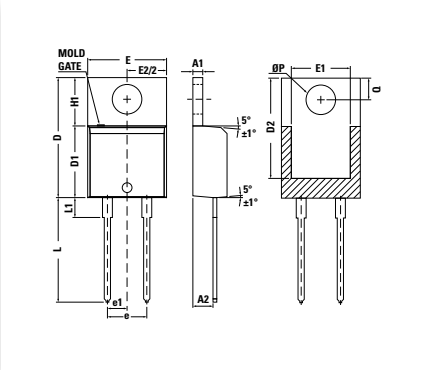

Dim	Millimeters		
	min	nominal	max
A	4.320	4.450	4.570
A1	1.140	1.270	1.400
A2	2.500	–	2.740
b	0.690	–	0.880
b1	0.680	–	0.870
b2	1.230	–	1.390
b3	1.220	1.270	1.380
c	0.360	–	0.503
c1	0.630	–	0.527
D	14.900	–	15.600
D1	8.615	–	9.017
D2	12.840	–	12.950
E	10.000	10.180	10.360
E1	7.570	7.610	7.680
e1	2.490	2.540	2.590
e	5.030	5.080	5.130
H1	6.295	6.545	6.795
L	13.000	13.500	14.000
L1	2.390	–	3.250
øP	3.710	3.840	3.960
Q	2.650	–	3.050
R	–	–	0.254

L005c TO-220AB (ISO)
Weight = 2 g

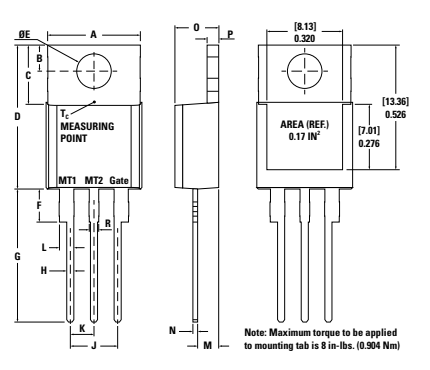

Dim	Millimeters		Inches	
	min	max	min	max
A	9.65	10.67	0.380	0.420
B	2.67	2.92	0.105	0.115
C	5.84	6.35	0.230	0.250
D	14.99	15.75	0.590	0.620
E	3.61	3.73	0.142	0.147
F	2.79	3.30	0.110	0.130
G	13.72	14.61	0.540	0.575
H	0.64	0.89	0.025	0.035
J	4.95	5.21	0.195	0.205
K	2.41	2.67	0.095	0.105
L	1.52	1.91	0.060	0.075
M	2.16	2.41	0.085	0.095
N	0.46	0.61	0.018	0.024
O	4.52	4.78	0.178	0.188
P	1.14	1.52	0.045	0.060
R	0.97	1.22	0.038	0.048

L006a TO-92
L006b TO-92 (GAK)
Weight = 0.2 g

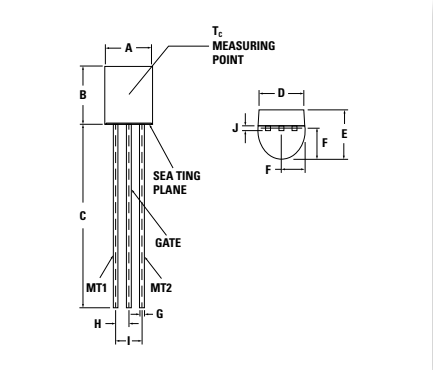

Dim	Millimeters		Inches	
	min	max	min	max
A	4.450	5.200	0.175	0.205
B	4.320	5.330	0.170	0.210
C	12.70	–	0.500	–
D	3.430	–	0.135	–
E	3.180	4.190	0.125	0.165
F	2.040	2.660	0.080	0.105
G	0.407	0.533	0.016	0.021
H	1.150	1.390	0.045	0.055
I	2.420	2.660	0.095	0.105
J	0.380	0.500	0.015	0.020

L007 SMTO-263
Weight = 2.6 g

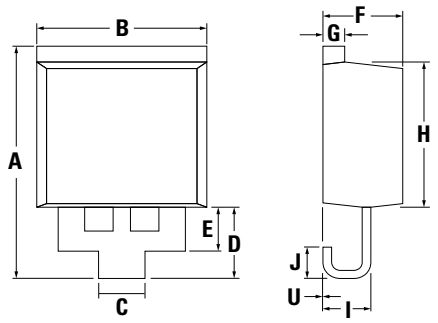

Dim	Millimeters		Inches	
	min	max	min	max
A	14.44	15.24	0.568	0.600
B	9.65	10.67	0.38	0.420
C	2.50	2.90	0.098	0.114
D	4.30	4.80	0.169	0.189
E	2.60	3.00	0.102	0.118
F	4.52	4.78	0.178	0.188
G	1.14	1.52	0.045	0.06
H	9.14	9.40	0.360	0.370
I	2.69	3.09	0.106	0.122
J	1.75	2.25	0.069	0.089
U	0	0.25	0	0.010

L008 1206 SMD
Weight = 0.008g

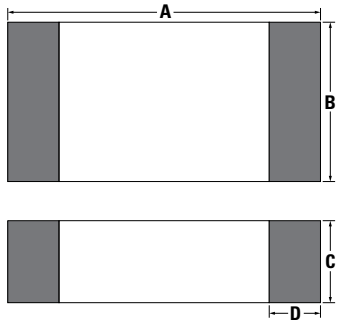

Dim	Millimeters		Inches	
	min	max	min	max
A	3.022	3.378	0.119	0.133
B	1.430	1.730	0.056	0.068
C	0.820	0.850	0.027	0.039
D	0.320	0.720	0.012	0.028

L011b TO-263AB
Weight = 1.5 g

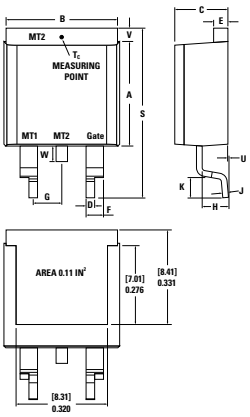

Dim	Millimeters		Inches	
	min	max	min	max
A	9.14	9.40	0.360	0.370
B	9.65	10.67	0.380	0.420
C	4.52	4.78	0.178	0.188
D	0.64	0.89	0.025	0.035
E	1.14	1.52	0.045	0.060
F	1.52	1.91	0.060	0.075
G	2.41	2.67	0.095	0.105
H	2.34	2.59	0.092	0.102
J	0.46	0.61	0.018	0.024
K	2.29	2.79	0.090	0.110
S	14.99	15.88	0.590	0.625
V	0.89	1.14	0.035	0.045
U	0.05	0.25	0.002	0.010
W	1.02	1.78	0.040	0.070

L008 1206 SMD
Weight = 0.008g

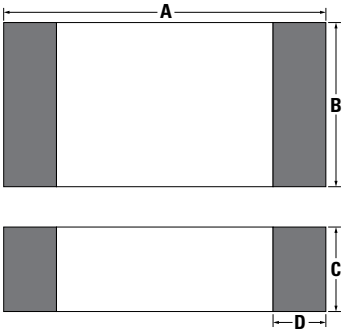

Dim	Millimeters		Inches	
	min	max	min	max
A	4.06	4.83	0.160	0.190
A1	typ 0.10		typ 0.004	
A2	2.41		0.095	
b	0.51	0.99	0.020	0.039
b2	1.14	1.40	0.045	0.055
c	0.40	0.74	0.016	0.029
c2	1.14	1.40	0.045	0.055
D	8.38	9.40	0.330	0.370
D1	8.00	8.89	0.315	0.350
D2	2.5		0.098	
E	9.65	10.41	0.380	0.410
E1	6.22	8.50	0.245	0.335
e	2.54 BSC		0.100 BSC	
e1	4.28		0.169	
H	14.61	15.88	0.575	0.625
L	1.78	2.79	0.070	0.110
L2	1.02	1.68	0.040	0.066
W	typ 0.02	0.040	typ 0.0008	0.002

©2023 Littelfuse, Inc

L012b TO-263 (7)
Weight = 2.5 g

C) middle leg cut

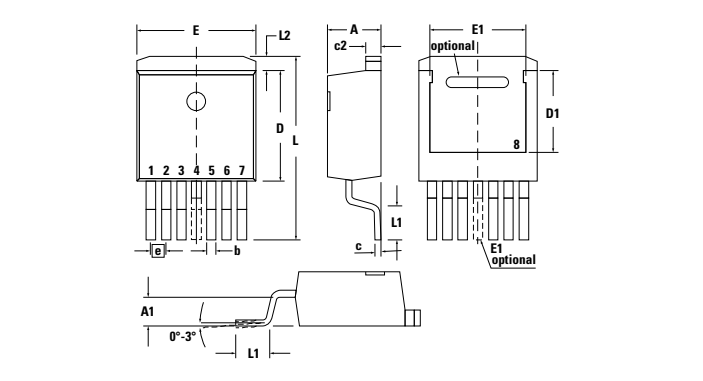

Dim	Millimeters		Inches	
	min	max	min	max
A	4.20	4.60	0.165	0.181
A1	2.45	2.75	0.096	0.108
b	0.65	0.90	0.026	0.035
c	0.40	0.60	0.016	0.024
c2	1.14	1.40	0.045	0.055
D	8.38	8.64	0.330	0.340
D1	6.10	6.35	0.240	0.250
E	10.00	10.30	0.394	0.406
E1	7.34	8.00	0.290	0.315
e	1.27 BSC		0.050 BSC	
L	14.73	15.75	0.580	0.620
L1	2.24	2.84	0.088	0.112
L2	1.35	1.55	0.053	0.061

L014a TO-247AD
Weight = 6 g

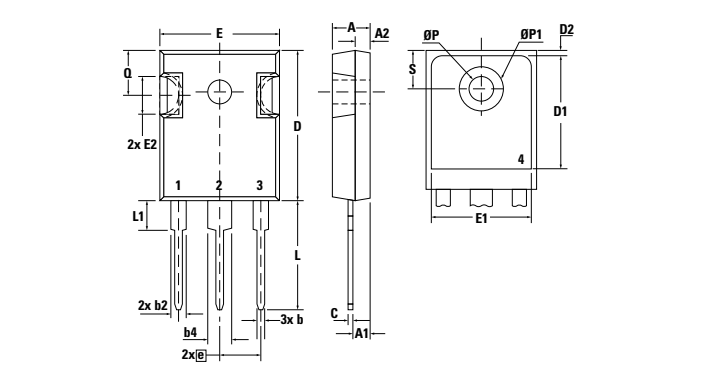

Dim	Millimeters		Inches	
	min	max	min	max
A	4.70	5.30	0.185	0.209
A1	2.21	2.59	0.087	0.102
A2	1.50	2.49	0.059	0.098
b	0.99	1.40	0.039	0.055
b2	1.65	2.39	0.065	0.094
b4	2.59	3.43	0.102	0.135
c	0.38	0.89	0.015	0.035
D	20.79	21.45	0.819	0.845
D1	13.07	–	0.515	–
D2	0.51	1.35	0.020	0.053
E	15.48	16.24	0.610	0.640
E1	13.45	–	0.53	–
E2	4.31	5.48	0.170	0.216
e	5.45 BSC		0.215 BSC	
L	19.80	20.30	0.078	0.800
L1	–	4.49	–	0.177
Ø P	3.55	3.65	0.140	0.144
Ø P1	–	7.39	–	0.290
Q	5.38	6.19	0.212	0.244
S	6.14 BSC		0.242 BSC	

L014b TO-247AD
Weight = 6 g

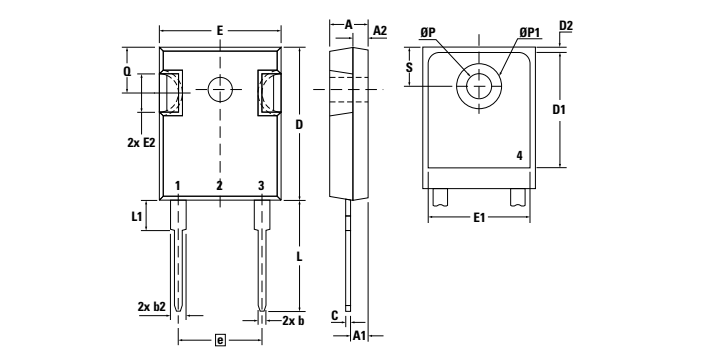

Dim	Millimeters		Inches	
	min	max	min	max
A	4.70	5.30	0.185	0.209
A1	2.21	2.59	0.087	0.102
A2	1.50	2.49	0.059	0.098
b	0.99	1.40	0.039	0.055
b2	1.65	2.39	0.065	0.094
b4	2.59	3.43	0.102	0.135
c	0.38	0.89	0.015	0.035
D	20.79	21.45	0.819	0.845
D1	13.07	–	0.515	–
D2	0.51	1.35	0.020	0.053
E	15.48	16.24	0.610	0.640
E1	13.45	–	0.530	–
E2	4.31	5.48	0.170	0.216
e	10.90 BSC		0.430 BSC	
L	19.80	20.30	0.078	0.800
L1	–	4.49	–	0.177
Ø P	3.55	3.65	0.140	0.144
Ø P1	–	7.39	–	0.290
Q	5.38	6.19	0.212	0.244
S	6.14 BSC		0.242 BSC	

L014d TO-247AD
Weight = 6 g

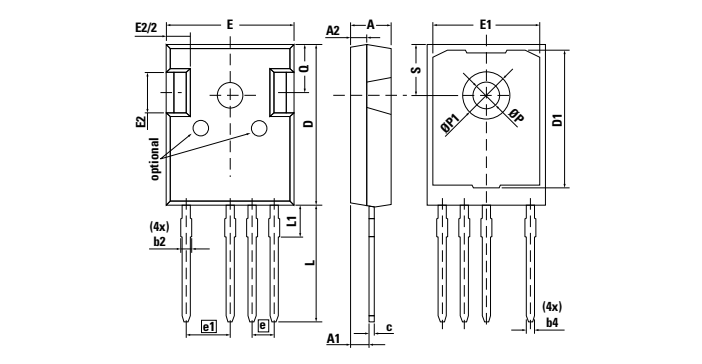

Dim	Millimeters		Inches	
	min	max	min	max
A	4.70	5.31	0.185	0.209
A1	2.21	2.59	0.087	0.102
A2	1.85	2.16	0.073	0.085
b	1.10	1.30	0.043	0.051
b2	1.30	1.50	0.051	0.059
c	0.50	0.89	0.020	0.035
D	20.80	21.46	0.819	0.845
D1	13.50	–	–	–
e	2.54 BSC		0.100 BSC	
e1	5.08 BSC		0.200 BSC	
E	15.49	16.26	0.610	0.640
E1	13.06	14.15	0.514	0.557
E2	4.32	4.83	0.170	0.190
L	19.81	20.57	0.780	0.810
L1	3.81	4.50	0.150	0.177
Ø P	3.55	3.70	0.140	0.146
Ø P1	7.00	7.40	0.276	0.291
Q	5.38	6.20	0.212	0.244
S	6.15 BSC		0.242 BSC	

Outline Drawings

L015 SOT-23
Weight = 0.008 g

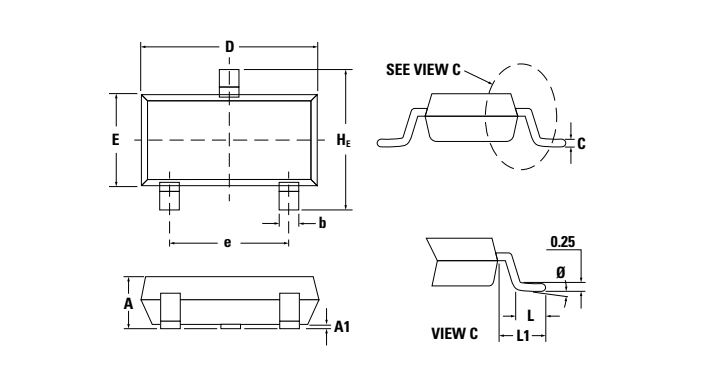

Dim	Millimeters		Inches	
	min	max	min	max
A	0.89	1.17	0.035	0.046
A1	0.05	0.15	0.001	0.006
b	0.30	0.50	0.012	0.020
c	0.08	0.20	0.003	0.008
D	2.80	3.00	0.110	0.118
E	1.20	1.40	0.047	0.055
e	1.90 BSC		0.075 BSC	
L	0.40	0.58	0.016	0.023
L1	0.46	0.64	0.018	0.025
HE	2.10	2.49	0.083	0.098
Ø	0°	10°	0°	10°

L016 SOT-89
Weight = 0.045 g

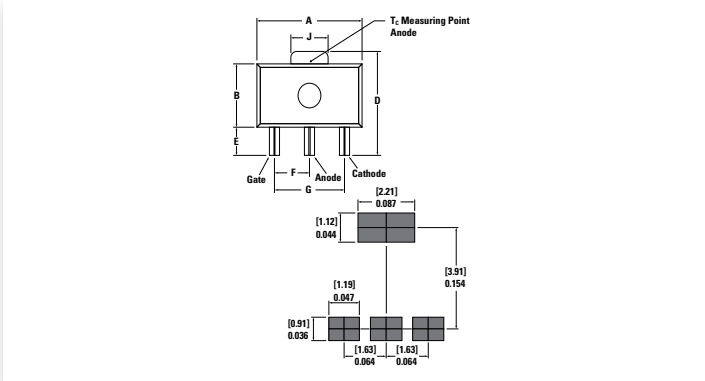

Dim	Millimeters		Inches	
	min	max	min	max
A	4.40	4.60	0.173	0.181
B	2.29	2.60	0.090	0.102
C	1.40	1.60	0.055	0.063
D	3.94	4.25	0.155	0.167
E	0.89	1.20	0.035	0.047
F	1.42	1.57	0.056	0.062
G	2.92	3.07	0.115	0.121
H	0.35	0.44	0.014	0.017
I	0.36	0.48	0.014	0.019
J	1.62	1.83	0.064	0.072

L019a TO-268 AA (D3PAK HV)
Weight = 4 g

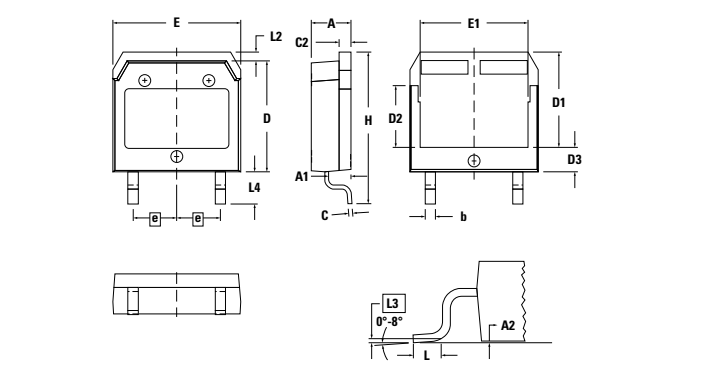

Dim	Millimeters		Inches	
	min	max	min	max
A	4.90	5.10	0.193	0.201
A1	2.70	2.90	0.106	0.114
A2	0.02	0.25	0.001	0.100
b	1.15	1.45	0.045	0.057
C	0.40	0.65	0.016	0.026
C 2	1.45	1.60	0.057	0.063
D	13.80	14.00	0.543	0.551
D1	11.80	12.10	0.465	0.476
D2	7.50	7.80	0.295	0.307
D3	2.90	3.20	0.114	0.126
E	15.85	16.05	0.624	0.632
E1	13.30	13.60	0.524	0.535
e	5.45 BSC		0.215 BSC	
H	18.70	19.10	0.736	0.752
L	1.70	2.00	0.067	0.079
L2	1.00	1.15	0.039	0.045
L3	0.25 BSC		0.010 BSC	
L4	3.80	4.10	0.150	0.161

L016 SOT-89
Weight = 0.045 g

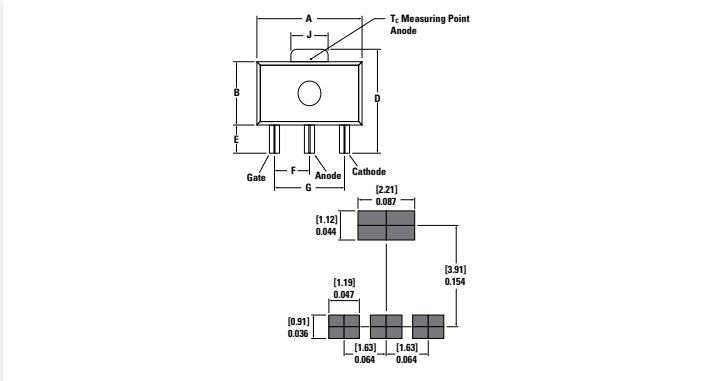

Dim	Millimeters		Inches	
	min	max	min	max
A	31.50	31.88	1.240	1.255
B	7.80	8.20	0.307	0.323
C	4.09	4.29	0.161	0.169
D	4.09	4.29	0.161	0.169
E	4.09	4.29	0.161	0.169
F	14.91	15.11	0.587	0.595
G	30.12	30.30	1.186	1.193
H	37.80	38.23	1.488	1.505
J	11.68	12.22	0.460	0.481
K	8.92	9.60	0.351	0.378
L	0.74	0.84	0.029	0.033
M	12.50	13.10	0.492	0.516
N	25.15	25.42	0.990	1.001
O	1.95	2.13	0.077	0.084
P	4.95	6.20	0.195	0.244
Q	26.54	26.90	1.045	1.059
R	3.94	4.42	0.155	0.174
S	4.55	4.85	0.179	0.191
T	24.59	25.25	0.968	0.994
U	-0.05	0.10	-0.002	0.004
V	3.20	5.50	0.126	0.217
W	19.81	21.08	0.780	0.830
Z	2.50	2.70	0.098	0.106

©2023 Littelfuse, Inc

Alphanumeric Index

Symbols

2N607xA 97

A

A0516YC240 165
A0516YC280 165
A1237NC240 165
A1237NC280 165

B

B0470WC120 155
B0470WC160 155
B0713YC200 155
B0713YC220 155
B0713YC240 155
B0713YC250 155
B0800YC120 155
B0800YC140 155
B0800YC160 155
B0800YC180 155
B0870YC120 155
B0870YC140 155
B0870YC160 155
B1115LC160 155
B1115LC180 155
B1230LC120 155
B1230LC140 155
B1230LC160 155
B1725NC120 155
B1725NC140 155
B1725NC160 155
B1725NC180 155
B1815NC120 155
B1815NC140 155
B1815NC160 155

C

C106x 94
CLA5E1200PZ 10, 92
CLA5E1200UC 92
CLA15E1200NPB 92
CLA15E1200NPZ 10, 92
CLA16E800PN 92
CLA16E1200PN 92
CLA30E1200HB 93
CLA30E1200NPZ 10, 92
CLA30E1200PB 92
CLA30E1200PC 92
CLA30MT1200NPB 97
CLA30MT1200NPZ 10, 97
CLA40E1200HR 12, 93
CLA40E1200NHB 93
CLA40E1200NPZ 10, 93
CLA40MT1200NHB 97
CLA40MT1200NPB 97
CLA40MT1200NPZ 10, 97
CLA40P1200FC 23, 93
CLA50E1200HB 93
CLA50E1200TC 93
CLA60MT1200NHB 97
CLA60MT1200NHR 12, 97
CLA60MT1200NTZ 12, 97
CLA60MU1200LB 19
CLA60PD1200NA 103
CLA80E1200HF 93
CLA80MT1200NHB 97
CLA80MT1200NHR 12, 97
CLA100E1200HB 93
CLA100E1200KB 93
CLA100E1200TZ 12, 93
CLA100PD1200NA 104
CLA110MB1200NA 119
CLB30I1200HB 93
CLB30I1200PZ 10, 93
CLB40I1200PZ 10, 93
CLE20E1200PC 93
CLE30E1200PB 93
CLE90UH1200TLB 93, 118
CLF20E1200PB 93
CMA20E1600PB 92
CMA20E1600PZ 10, 92
CMA30E1600PB 93
CMA30E1600PN 93
CMA30E1600PZ 10, 93
CMA30P1600FC 23, 93
CMA40E1600HR 12, 93
CMA50E1600HB 93
CMA50E1600QB 93
CMA50P1600FC 23, 93
CMA50P1600LB 19
CMA60MT1600NHB 97
CMA60MT1600NHR 12, 97
CMA80E1600HB 93
CMA80MT1600NHB 97
CMA80MT1600NHR 12, 97
CMA80PD1600NA 103
CME30E1600PZ 10, 93
CNE60E2200TZ 12, 93
CPC1002N 124
CPC1004N 124
CPC1006N 121
CPC1008N 121
CPC1009N 121
CPC1010N 121
CPC1014N 121
CPC1016N 121
CPC1017N 121
CPC1018N 121
CPC1019N 121
CPC1020N 121
CPC1025N 121
CPC1030N 121
CPC1035N 121
CPC1106N 123
CPC1114N 123
CPC1117N 123
CPC1125N 123
CPC1130N 123
CPC1135N 123
CPC1150N 123
CPC1225N 121
CPC1230N 121
CPC1231N 123
CPC1330 121
CPC1333 123
CPC1335 121
CPC1390 121
CPC1393 121
CPC1394 121
CPC1510 ..... 121, 125
CPC1511 ..... 121, 125
CPC1540 ..... 121, 125
CPC1560 ..... 121, 125
CPC1561 ..... 121, 125
CPC1563 ..... 121, 125
CPC1580 133
CPC1590 133
CPC1593 ..... 121, 125
CPC1705Y 126
CPC1706Y 126
CPC1708J 126
CPC1709J 126
CPC1718J 126
CPC1726Y 126
CPC1727J 126
CPC1777J 126
CPC1779J 126
CPC1786J 126
CPC1788J 126
CPC1906Y 126
CPC1907B 126
CPC1908J 126
CPC1909J 126
CPC1916Y 126
CPC1918J 126
CPC1926Y 126
CPC1927J 126
CPC1943 127
CPC1945G 127
CPC1945Y 127
CPC1961 127
CPC1963 127
CPC1964B 128
CPC1964BX6 128
CPC1965G 127
CPC1965Y 127
CPC1966 128
CPC1966B 128
CPC1966BX8 128
CPC1966YX6 128
CPC1966YX8 128
CPC1967J 126
CPC1968J 126
CPC1972 127
CPC1973Y 126
CPC1976 128
CPC1976YX6 128
CPC1977J 126
CPC1978J 126
CPC1979J 126
CPC1981Y 126
CPC1983B 126
CPC1983Y 126
CPC1983YE 126
CPC1984Y 126
CPC1986J 126
CPC1988J 126
CPC1998J 128
CPC2014N 122
CPC2017N 122
CPC2025N 122
CPC2030N 122
CPC2125N 123
CPC2317N 124
CPC2330N 124
CPC2907B 126
CPC3701 66
CPC3703 66
CPC3708 66
CPC3710 66
CPC3714 66
CPC3720 66
CPC3730 66
CPC3902 66
CPC3909 66
CPC3960 66
CPC3980 66
CPC3981 66
CPC3982 66
CPC40055ST 128
CS19 92
CS20 92
CS20-22MOF1 23
CS20-25MO1F 23
CS22 92
CS30 93
CS45 93
CS60 93

D

DAA10EM1800PZ 9, 86
DAA10P1800PZ 9, 86
DAA200X1800NA 88
DAA200XA1800NA 88
DCG10P1200HR 12, 85
DCG17P1200HR 12, 85
DCG20B650LB 111
DCG20C1200HR 12, 85
DCG35C1200HR 12, 85
DCG40X1200LB 19
DCG45X1200NA 85
DCG80B1200NA 85
DCG81B1200NA 85
DCG85X1200NA 85
DCG130X1200NA 85
DCG200X1200NA 85
DCH15B1200FC 85
DFE10I600PM 82
DFE25I600HA 82
DFE240X600NA 83
DFE250X600NA 83
DH2X60 81
DH2X61 81
DH20 81
DH40 81
DH60 81
DHG5I600PA 81
DHG5I600PM 81
DHG10C600PB 81
DHG10I1200PA 81
DHG10I1200PM 81
DHG10I1800PA 81
DHG10IM1800UZ 9, 81
DHG20C1200PB 81
DHG20I1200HA 81

Alphanumeric Index

DHG20I1200PA 81
DHG30I600HA 81
DHG30I600PA 81
DHG30I1200HA 81
DHG30IM600PC 81
DHG40B1200LB 19, 111
DHG40C1200HB 81
DHG40I4500KO 81
DHG50X650NA 81
DHG50X1200NA 81
DHG55I3300FE 81
DHG60C600HB 81
DHG60I600HA 81
DHG60I1200HA 81
DHG60U1200LB 19, 111
DHG100X650NA 81
DHG100X1200NA 81
DHH55 ..... 23, 78, 81
DLA5P800UC 86
DLA10IM800UC 86
DLA20IM800PC 86
DLA40IM800PC 87
DLA60I1200HA 88
DLA100B800LB 19, 71, 113
DLA100B1200LB 19, 71, 113
DLA100IM1200TZ 12, 88
DMA10I1600PA 86
DMA10IM1200UZ 9, 86
DMA10IM1600PZ 9, 86
DMA10IM1600UZ 9, 86
DMA10P1200HR 12, 87
DMA10P1200UZ 9, 86
DMA10P1600HR 12, 87
DMA10P1600PZ 9, 86
DMA10P1600UZ 9, 86
DMA10P1800PZ 9, 86
DMA30E1800HA 87
DMA30IM1600PZ 9, 87
DMA30P1200HB 87
DMA30P1600HB 87
DMA30P1600HR 12, 87
DMA40U1800GU 114
DMA50I800HA 88
DMA50I1200HA 88
DMA50I1600HA 88
DMA50P1200HB 88
DMA50P1200HR 12, 88
DMA50P1600HB 88
DMA80I1600HA 88
DMA80IM1600HB 88
DMA90U1800LB 19, 115
DMA120B800LB 19, 113
DMA150E1600NA 88
DMA150YA1600NA 116
DMA150YC1600NA 116
DMA200X1600NA 88
DMA200XA1600NA 88
DMA200YA1600NA 116
DMA200YC1600NA 116
DMA240YA1600NA 116
DMA240YC1600NA 116
DNA30E2200FE 23, 87
DNA30E2200PA 87
DNA30E2200PZ 9, 87
DNA30EM2200PZ 9, 87
DNA30ER2200IY 87
DNA40U2200GU 114
DNA90U2200LB 115
DNA90YA2200NA 116
DNA90YC2200NA 116
DNA120E2200KO 88
DPF30I300PA 79
DPF30P600HR 12, 78
DPF60C200HB 79
DPF60C200HJ 79
DPF60C300HB 79
DPF60I200HA 79
DPF60IM400HB 79
DPF80C200HB 79
DPF100C1200HB 79
DPF240X200NA 79
DPF240X400NA 79
DPG10I200PA 79
DPG10I200PM 79
DPG10I300PA 79
DPG10I400PA 79
DPG10I400PM 79
DPG10IM300UC 79
DPG10P400PJ 78, 79
DPG15I200PA 79
DPG15I300PA 79
DPG15I400PM 79
DPG20C200PB 79
DPG20C200PN 79
DPG20C300PB 79
DPG20C300PN 79
DPG20C400PB 79
DPG20C400PC 79
DPG20C400PN 79
DPG30C200HB 79
DPG30C200PB 79
DPG30C200PC 79
DPG30C300HB 79
DPG30C300PB 79
DPG30C300PC 79
DPG30C400HB 79
DPG30C400PB 79
DPG30I300HA 79
DPG30I300PA 79
DPG30I400HA 79
DPG30I600PM 80
DPG30IM300PC 79
DPG30IM400PC 79
DPG30P300PJ 78, 79
DPG30P400PJ 78, 79
DPG60B600LB 19, 111
DPG60C200HB 79
DPG60C200QB 79
DPG60C300HB 79
DPG60C300HJ 79
DPG60C300PC 79
DPG60C300QB 79
DPG60C400HB 79
DPG60C400QB 79
DPG60I300HA 79
DPG60I400HA 79
DPG60IM300PC 79
DPG60IM400QB 79
DPG80C300HB 79
DPG80C400HB 79
DPG120C300QB 79
DPH30IS600HI 78, 79
DPJ50XS1800NA 78
DSA1 86
DSA1-12D 86
DSA10C150PB 74
DSA10C150UC 74
DSA10I100PM 73
DSA10IM100UC 73
DSA15I45PA 73
DSA15IM45IB 73
DSA15IM45UC 73
DSA15IM150UC 74
DSA15IM200UC 74
DSA20C45PB 73
DSA20C60PB 73
DSA20C60PN 73
DSA20C100PB 73
DSA20C100PN 73
DSA20C150PB 74
DSA20C150PN 74
DSA20C200PB 74
DSA30C45HB 73
DSA30C45PB 73
DSA30C45PC 73
DSA30C60PB 73
DSA30C100HB 73
DSA30C100PB 73
DSA30C100PN 73
DSA30C100QB 73
DSA30C150HB 74
DSA30C150PB 74
DSA30C150PC 74
DSA30C200IB 74
DSA30C200PB 74
DSA30C200PC 74
DSA30I100PA 73
DSA30I150PA 74
DSA50C100HB 73
DSA50C100QB 73
DSA50C150HB 74
DSA60C45HB 73
DSA60C45PB 73
DSA60C60HB 73
DSA60C60PB 73
DSA60C100PB 73
DSA60C150PB 74
DSA70C100HB 73
DSA70C150HB 74
DSA70C200HB 74
DSA80C45HB 73
DSA80C100PB 73
DSA90C200HB 74
DSA90C200HR 12
DSA120C150QB 74
DSA120X150LB 19, 74
DSA120X200LB 19, 74
DSA240X150NA 74
DSA240X200LB 19, 74
DSA240X200NA 74
DSB10I45PM 73
DSB15IM30UC 73
DSB15IM45IB 73
DSB20C60PN 73
DSB20I15PA 73
DSB30C30PB 73
DSB30C45HB 73
DSB30C45PB 73
DSB30C60PB 73
DSB40C15PB 73
DSB60C30HB 73
DSB60C30PB 73
DSB60C45HB 73
DSB60C45PB 73
DSB60C60HB 73
DSB60C60PB 73
DSB80C45HB 73
DSDI60 84
DSDI60-14A 84
DSEC16 80
DSEC29 80
DSEC30 80
DSEC59 80
DSEC60 80
DSEC120 80
DSEC240 80
DSEE15 78
DSEE29 78
DSEE30 78
DSEE55 ..... 23, 78
DSEI2x30 83
DSEI2x31 83
DSEI2x60 83
DSEI2x61 83
DSEI2x101 83
DSEI2x121 83
DSEI2x161 83
DSEI8 82
DSEI12 82
DSEI12-12AZ 9
DSEI19 82
DSEI20 82
DSEI25 82
DSEI30 82
DSEI36 82
DSEI60 82
DSEI60-12A 83
DSEI120 83
DSEI120-12AZ 12
DSEK60 82
DSEK300 83
DSEP2x25 78
DSEP2X31 80
DSEP2X60 80
DSEP2X61 80
DSEP2X91 80
DSEP2X101 80
DSEP6 80
DSEP8 80
DSEP12 80
DSEP12-12AZ 9
DSEP12-12BZ 9

©2023 Littelfuse, Inc

DSEP15 ... 78, 80
DSEP29 ... 80
DSEP30 ... 78, 80
DSEP40-03AS ... 80
DSEP60 ... 80
DSEP60-12AZ ... 12
DSEP75 ... 80
DSEP90 ... 80
DSEP90-12AZ ... 12
DSI2x55 ... 88
DSI30 ... 87
DSI45 ... 87
DSIK45 ... 87
DSP8 ... 86
DSP25 ... 87
DSP45 ... 87
DSP45-12AZ ... 12
DSP45-16AZ ... 12
DSS2x41 ... 75
DSS2x61 ... 75
DSS2x81 ... 75
DSS2X101 ... 76
DSS2x111 ... 75
DSS2x121 ... 75
DSS2x160 ... 75
DSS6 ... 75
DSS6-015AS ... 76
DSS10 ... 75
DSS16 ... 75
DSS17 ... 78
DSS20 ... 75
DSS25 ... 75
DSS40-0008D ... 75
DSS60 ... 75
DSSK10 ... 76
DSSK16 ... 75
DSSK18 ... 75
DSSK20 ... 75, 76
DSSK28 ... 75
DSSK30 ... 75, 76
DSSK38 ... 75
DSSK40 ... 75
DSSK48 ... 75
DSSK50 ... 75, 76
DSSK60 ... 75, 76
DSSK70 ... 75
DSSK80 ... 75
DST560S ... 78
DST580S ... 78
DST860S ... 78
DST1040S ... 78
DST1040S-A ... 78
DST1045S ... 78
DST1050S ... 78
DST1545S ... 78
DST1550S ... 78
DST2045AX ... 77
DST2045C ... 77
DST2050S ... 78
DST2060C ... 77
DST2060DJF ... 77
DST2080C ... 77
DST2080S ... 78
DST3060DJF ... 77
DST3060LC ... 77
DST3080C ... 77
DST5100S ... 78
DST5200 ... 77
DST8100S ... 78
DST10100S ... 78
DST12100S ... 78
DST20100C ... 77
DST20150C ... 77
DST30100C ... 77
DST40100C ... 77
DSTB2045C ... 77
DSTB30200C ... 77
DSTB60100C ... 77
DSTD5200 ... 77
DSTF2045C ... 77
DSTF2050C ... 77
DSTF2060C ... 77
DSTF2080C ... 77
DSTF3045C ... 77
DSTF3060C ... 77
DSTF3060CR ... 77
DSTF3080C ... 77
DSTF4045C ... 77
DSTF4050C ... 77
DSTF4060C ... 77
DSTF10200C ... 77
DSTF20100C ... 77
DSTF20120C ... 77
DSTF20120CR ... 77
DSTF20150CR ... 77
DSTF30100C ... 77
DSTF30100S ... 77
DSTF30120C ... 77
DSTF30120CR ... 77
DSTF30150C ... 77
DSTF40100C ... 77
DSTF40120C ... 77
DSTF40150C ... 77
DSTF60100C ... 77

E

E0460QC45E ... 149
E0660NC45E ... 149
E0660NH45E ... 149
E1250HC45E ... 149
E1500MC33E ... 149
E1500NC36P ... 149
E1500NC42P ... 149
E1500NC48P ... 149
E1500NH36P ... 149
E1500NH42P ... 149
E1500NH48P ... 149
E1780TG65E ... 149
E1800TC45E ... 149
E2400EC45E ... 149
E3000EC33E ... 149
E3000EC45E ... 149
E4000FD45E ... 149
EC103x ... 94

F

F0240YC250 ... 148
F0240YC300 ... 148
F0240YH250 ... 148
F0240YH300 ... 148
F0300WC140 ... 148
F0300WC180 ... 148
F0800LC140 ... 148
F0800LC180 ... 148
F0900VC450 ... 148
F0900VC520 ... 148
F0900VF450 ... 148
F0900VF520 ... 148
F1000LC080 ... 148
F1000LC120 ... 148
F1300NC45P ... 148
F1300NC50P ... 148
F1300NC55P ... 148
F1400NC140 ... 148
F1400NC180 ... 148
F1500NC200 ... 148
F1500NC250 ... 148
F1600NC080 ... 148
F1600NC120 ... 148
FBE22 ... 23, 111
FBO16 ... 23, 71
FBO16-12N ... 112
FBO40 ... 23, 71, 112
FBS10 ... 23
FDA215 ... 134
FDA217 ... 134
FMD15 ... 22, 69
FMD15-06KC5 ... 71
FMM50 ... 22
FMM60 ... 22
FMM75 ... 22
FUE30 ... 23, 111
FUO22 ... 23, 114
FUO22-12N ... 114
FUO50 ... 23, 114

G

G1000NC45B ... 166
G1000QC25B ... 166
G1000QC45B ... 166
G2000HF250 ... 166
G2000HF450 ... 166
G2500HF250 ... 166
G3000TF250 ... 166
G3000TF450 ... 166
G4000EF250 ... 166
G4000EF450 ... 166
GBO25 ... 112
GMM3x60-015X2 ... 20
GUO40 ... 114

H

H0500KC20Y ... 166
H0500KC25D ... 166
H0500KC25Y ... 166
H0500KC200 ... 166
H0700KC14Y ... 166
H0700KC17D ... 166
H0700KC17Y ... 166
H0700KC140 ... 166
H1200NC20Y ... 166
H1200NC25D ... 166
H1200NC25Y ... 166
H1200NC200 ... 166
HQ6025xH5 ... 98
HS4040xAQx ... 95

I

ITF40PF1200DHGTLB ... 18
ITF40PG1200DHGLB ... 18
ITF48IF1200HR ... 14, 32
IX4310T ... 129
IX4340 ... 129
IX4340NE ... 129
IX4426 ... 129
IX4427 ... 129
IX4428 ... 129
IXA4IF1200TC ... 32
IXA4IF1200UC ... 10, 32
IXA12IF1200HB ... 32
IXA12IF1200PB ... 32
IXA12IF1200TC ... 32
IXA17IF1200HJ ... 32
IXA20I1200PB ... 32
IXA20I1200PZ ... 32
IXA20IF1200HB ... 32
IXA20IF1200HR ... 14
IXA20PG1200DHGLB ... 18
IXA20RG1200DHGLB ... 18
IXA27IF1200HJ ... 32
IXA30IF1200HR ... 14
IXA30PG1200DHGLB ... 18
IXA30RG1200DHGLB ... 18
IXA33IF1200HB ... 32
IXA37IF1200HJ ... 32
IXA40IF1200HR ... 14
IXA40PG1200DHGLB ... 18
IXA40RG1200DHGLB ... 18
IXA45IF1200HB ... 32
IXA55I1200HJ ... 32
IXA60IF1200NA ... 32
IXA70I1200NA ... 32
IXBA10N300HV ... 10, 35
IXBA14N300HV ... 10, 35
IXBA16N170AHV ... 10, 35
IXBF22N300 ... 22, 35
IXBF32N300 ... 22, 35
IXBF42N300 ... 22, 35
IXBF55N300 ... 22, 35
IXBH6N170 ... 35
IXBH10N170 ... 35
IXBH10N300 ... 35
IXBH10N300HV ... 13, 35
IXBH14N300HV ... 13, 35
IXBH16N170 ... 35
IXBH16N170A ... 35
IXBH16N360HV ... 13
IXBH20N360HV ... 13
IXBH22N300HV ... 13, 35
IXBH24N170 ... 35
IXBH32N300 ... 35
IXBH32N300HV ... 13, 35
IXBH42N170 ... 35
IXBH42N170A ... 35
IXBH42N300HV ... 13, 35
IXBK55N300 ... 35
IXBK64N250 ... 35

Alphanumeric Index

IXBK75N170 ... 35
IXBL64N250 ... 35
IXBN42N170A ... 35
IXBN75N170 ... 35
IXBOD ... 89, 90
IXBOD 1-06 ... 89
IXBOD2 ... 91
IXBOD 2-01 ... 90
IXBOD2-29R ... 91
IXBOD2-48R ... 91
IXBR42N170 ... 35
IXBT6N170 ... 35
IXBT10N170 ... 35
IXBT16N170A ... 35
IXBT16N170AHV ... 11, 35
IXBT16N360HV ... 11
IXBT20N360HV ... 11
IXBT22N300HV ... 11, 35
IXBT24N170 ... 35
IXBT32N300HV ... 11, 35
IXBT42N170 ... 35
IXBT42N170A ... 35
IXBT42N300HV ... 11, 35
IXBX28N300HV ... 13, 35
IXBX50N360HV ... 13
IXBX55N300 ... 35
IXBX64N250 ... 35
IXBX75N170 ... 35
IXBX75N170A ... 35
IXCH36N250 ... 35
IXCK36N250 ... 35
IXD_602 ... 129
IXD_604 ... 129
IXD_604SI ... 129
IXD_604SIA ... 129
IXD_609 ... 129
IXD_609SI ... 129
IXD_614 ... 129
IXD_614SI ... 129
IXD_630 ... 129
IXD_630M ... 129
IXEL40N400 ... 34
IXFA4N85X ... 59
IXFA4N100P ... 51
IXFA5N100P ... 51
IXFA6N120P ... 51
IXFA7N80P ... 50
IXFA7N100P ... 51
IXFA8N65X2 ... 57
IXFA8N85XHV ... 10, 59
IXFA10N60P ... 49
IXFA10N80P ... 50
IXFA12N50P ... 49
IXFA12N65X2 ... 57
IXFA14N60P ... 49
IXFA14N60P3 ... 53
IXFA14N85XHV ... 10, 59
IXFA16N50P ... 49
IXFA16N50P3 ... 52
IXFA16N60P3 ... 53
IXFA18N65X2 ... 57
IXFA20N50P3 ... 52
IXFA20N85XHV ... 10, 59
IXFA22N60P3 ... 53
IXFA22N65X2 ... 57
IXFA26N30X3 ... 56
IXFA26N50P3 ... 52
IXFA30N25X3 ... 55
IXFA34N65X2 ... 58
IXFA36N20X3 ... 54
IXFA36N30P3 ... 52
IXFA38N30X3 ... 56
IXFA44N25X3 ... 55
IXFA50N20X3 ... 54
IXFA56N30X3 ... 56
IXFA60N25X3 ... 55
IXFA72N20X3 ... 54
IXFA72N30X3 ... 56
IXFA76N15T2 ... 45
IXFA80N25X3 ... 55
IXFA90N20X3 ... 54
IXFA102N15T ... 42
IXFA110N15T2 ... 45
IXFA130N10T ... 42
IXFA130N10T2 ... 44
IXFA180N10T2 ... 44
IXFA230N075T2 ... 44
IXFB30N120P ... 51
IXFB40N110P ... 51
IXFB40N110Q3 ... 60
IXFB44N100P ... 51
IXFB44N100Q3 ... 60
IXFB52N90P ... 51
IXFB60N80P ... 50
IXFB62N80Q3 ... 60
IXFB70N100X ... 59
IXFB82N60P ... 49
IXFB82N60Q3 ... 60
IXFB90N85X ... 59
IXFB100N50P ... 49
IXFB100N50Q3 ... 60
IXFB110N60P3 ... 53
IXFB132N50P3 ... 52
IXFB150N65X2 ... 58
IXFB170N30P ... 49
IXFB210N20P ... 48
IXFB210N30P3 ... 52
IXFB300N10P ... 48
IXFH5N100P ... 51
IXFH6N120P ... 51
IXFH7N100P ... 51
IXFH10N80P ... 50
IXFH10N100P ... 51
IXFH12N65X2 ... 57
IXFH12N80P ... 50
IXFH12N90P ... 50
IXFH12N100P ... 51
IXFH12N120P ... 51
IXFH14N60P ... 49
IXFH14N60P3 ... 53
IXFH14N80P ... 50
IXFH14N85X ... 59
IXFH15N100P ... 51
IXFH15N100Q3 ... 60
IXFH16N50P ... 49
IXFH16N50P3 ... 52
IXFH16N60P3 ... 53
IXFH16N80P ... 50
IXFH16N120P ... 51
IXFH18N60P ... 49
IXFH18N65X2 ... 57
IXFH18N90P ... 50
IXFH18N100Q3 ... 60
IXFH20N50P3 ... 52
IXFH20N80P ... 50
IXFH20N85X ... 59
IXFH20N100P ... 51
IXFH22N50P ... 49
IXFH22N60P ... 49
IXFH22N60P3 ... 53
IXFH22N65X2 ... 57
IXFH24N80P ... 50
IXFH24N90P ... 50
IXFH26N50P ... 49
IXFH26N50P3 ... 52
IXFH26N60P ... 49
IXFH26N100X ... 59
IXFH28N60P3 ... 53
IXFH30N50P ... 49
IXFH30N50Q3 ... 60
IXFH30N60P ... 49
IXFH30N85X ... 59
IXFH32N100X ... 59
IXFH34N50P3 ... 52
IXFH34N65X2 ... 58
IXFH36N50P ... 49
IXFH36N60P ... 49
IXFH40N85X ... 59
IXFH42N60P3 ... 53
IXFH44N50P ... 49
IXFH44N50Q3 ... 60
IXFH46N30T ... 42
IXFH46N65X2 ... 58
IXFH50N30Q3 ... 60
IXFH50N60P3 ... 53
IXFH50N85X ... 59
IXFH52N30P ... 48
IXFH56N30X3 ... 56
IXFH60N50P3 ... 52
IXFH60N65X2 ... 58
IXFH69N30P ... 48
IXFH70N20Q3 ... 60
IXFH70N30Q3 ... 60
IXFH72N30X3 ... 56
IXFH74N20P ... 48
IXFH80N25X3 ... 55
IXFH80N65X2 ... 58
IXFH86N30T ... 42
IXFH88N30P ... 49
IXFH90N20X3 ... 54
IXFH94N30P3 ... 52
IXFH94N30T ... 42
IXFH96N15P ... 48
IXFH96N20P ... 48
IXFH100N25P ... 48
IXFH100N30X3 ... 56
IXFH102N15T ... 42
IXFH110N10P ... 48
IXFH110N15T2 ... 45
IXFH110N25T ... 42
IXFH120N15P ... 48
IXFH120N20P ... 48
IXFH120N25T ... 42
IXFH120N25X3 ... 55
IXFH120N30X3 ... 56
IXFH140N10P ... 48
IXFH140N20X3 ... 55
IXFH150N15P ... 48
IXFH150N17T2 ... 45
IXFH150N20T ... 42
IXFH150N25X3 ... 55
IXFH150N30X3 ... 56
IXFH160N15T ... 42
IXFH160N15T2 ... 45
IXFH170N10P ... 48
IXFH170N25X3 ... 55
IXFH180N20X3 ... 55
IXFH220N20X3 ... 55
IXFH230N10T ... 42
IXFH230N075T2 ... 44
IXFH320N10T2 ... 44
IXFH340N075T2 ... 44
IXFH400N075T2 ... 44
IXFJ20N85X ... 14, 59
IXFJ26N50P3 ... 14, 52
IXFJ80N25X3 ... 14, 55
IXFK20N120P ... 51
IXFK24N80P ... 50
IXFK24N100Q3 ... 60
IXFK26N100P ... 51
IXFK26N120P ... 51
IXFK32N80P ... 50
IXFK32N80Q3 ... 60
IXFK32N90P ... 50
IXFK32N100P ... 51
IXFK32N100Q3 ... 60
IXFK32N100X ... 59
IXFK36N60P ... 49
IXFK40N90P ... 50
IXFK44N50P ... 49
IXFK44N80P ... 50
IXFK44N80Q3 ... 60
IXFK48N60P ... 49
IXFK48N60Q3 ... 60
IXFK50N85X ... 59
IXFK52N100X ... 59
IXFK64N50P ... 49
IXFK64N50Q3 ... 60
IXFK64N60P ... 49
IXFK64N60P3 ... 53
IXFK64N60Q3 ... 60
IXFK66N85X ... 59
IXFK78N50P3 ... 52
IXFK80N50P ... 49
IXFK80N50Q3 ... 60
IXFK80N60P3 ... 53
IXFK80N65X2 ... 58
IXFK88N30P ... 49
IXFK98N50P3 ... 52
IXFK100N65X2 ... 58
IXFK102N30P ... 49
IXFK120N20P ... 48

©2023 Littelfuse, Inc

IXFK120N25P ... 48
IXFK120N30P3 ... 52
IXFK120N30T ... 42
IXFK120N65X2 ... 58
IXFK140N20P ... 48
IXFK140N25T ... 42
IXFK140N30P ... 49
IXFK150N15P ... 48
IXFK150N30P3 ... 52
IXFK150N30X3 ... 56
IXFK160N30T ... 42
IXFK170N10P ... 48
IXFK170N20P ... 48
IXFK170N20T ... 42
IXFK170N25X3 ... 55
IXFK180N15P ... 48
IXFK180N25T ... 42
IXFK200N10P ... 48
IXFK210N30X3 ... 56
IXFK220N15P ... 48
IXFK220N17T2 ... 45
IXFK220N20X3 ... 55
IXFK230N20T ... 42
IXFK240N15T2 ... 45
IXFK240N25X3 ... 55
IXFK250N10P ... 48
IXFK300N20X3 ... 55
IXFK320N17T2 ... 45
IXFK360N10T ... 42
IXFK360N15T2 ... 45
IXFK420N10T ... 42
IXFK520N075T2 ... 44
IXFL30N120P ... 51
IXFL32N120P ... 51
IXFL36N110P ... 51
IXFL38N100P ... 51
IXFL40N110P ... 51
IXFL44N100P ... 51
IXFL60N80P ... 50
IXFL82N60P ... 49
IXFL100N50P ... 49
IXFL132N50P3 ... 52
IXFL210N30P3 ... 52
IXFN20N120P ... 51
IXFN26N100P ... 51
IXFN26N120P ... 51
IXFN27N120SK ... 71
IXFN30N120P ... 51
IXFN32N80P ... 50
IXFN32N100P ... 51
IXFN32N100Q3 ... 60
IXFN32N120P ... 51
IXFN38N100P ... 51
IXFN40N90P ... 50
IXFN40N110P ... 51
IXFN40N110Q3 ... 60
IXFN44N80P ... 50
IXFN44N80Q3 ... 60
IXFN44N100P ... 51
IXFN44N100Q3 ... 60
IXFN48N60P ... 49
IXFN50N120SiC ... 71
IXFN50N120SK ... 71
IXFN52N90P ... 50
IXFN52N100X ... 59
IXFN56N90P ... 51
IXFN60N80P ... 50
IXFN62N80Q3 ... 60
IXFN64N50P ... 49
IXFN64N60P ... 49
IXFN66N85X ... 59
IXFN70N100X ... 59
IXFN70N120SK ... 71
IXFN74N100X ... 59
IXFN80N50P ... 49
IXFN80N50Q3 ... 60
IXFN80N60P3 ... 53
IXFN82N60P ... 49
IXFN82N60Q3 ... 60
IXFN90N85X ... 59
IXFN100N50P ... 49
IXFN100N50Q3 ... 60
IXFN100N65X2 ... 58
IXFN102N30P ... 49
IXFN110N60P3 ... 53
IXFN110N85X ... 59
IXFN120N65X2 ... 58
IXFN130N90SK ... 71
IXFN132N50P3 ... 52
IXFN140N20P ... 48
IXFN140N25T ... 42
IXFN140N30P ... 49
IXFN150N65X2 ... 58
IXFN160N30T ... 42
IXFN170N25X3 ... 55
IXFN170N30P ... 49
IXFN170N65X2 ... 58
IXFN180N15P ... 48
IXFN180N25T ... 42
IXFN200N10P ... 48
IXFN210N20P ... 48
IXFN210N30P3 ... 52
IXFN210N30X3 ... 56
IXFN220N20X3 ... 55
IXFN230N20T ... 42
IXFN240N15T2 ... 45
IXFN240N25X3 ... 55
IXFN300N10P ... 48
IXFN300N20X3 ... 55
IXFN320N17T2 ... 45
IXFN360N10T ... 42
IXFN360N15T2 ... 45
IXFN420N10T ... 42
IXFN520N075T2 ... 44
IXFP4N85X ... 59
IXFP4N85XM ... 59
IXFP4N100P ... 51
IXFP5N100P ... 51
IXFP6N120P ... 51
IXFP7N80P ... 50
IXFP7N100P ... 51
IXFP8N65X2 ... 57
IXFP8N85X ... 59
IXFP8N85XM ... 59
IXFP10N60P ... 49
IXFP10N80P ... 50
IXFP12N50P ... 49
IXFP12N65X2 ... 57
IXFP12N65X2M ... 57
IXFP14N60P3 ... 53
IXFP14N85X ... 59
IXFP14N85XM ... 59
IXFP16N50P ... 49
IXFP16N50P3 ... 52
IXFP16N60P3 ... 53
IXFP18N65X2 ... 57
IXFP18N65X2M ... 57
IXFP20N50P3 ... 52
IXFP20N85X ... 59
IXFP22N60P3 ... 53
IXFP22N65X2 ... 57
IXFP22N65X2M ... 57
IXFP26N30X3 ... 56
IXFP26N50P3 ... 52
IXFP30N25X3 ... 55
IXFP30N25X3M ... 55
IXFP34N65X2 ... 58
IXFP34N65X2M ... 58
IXFP36N20X3 ... 54
IXFP36N20X3M ... 54
IXFP36N30P3 ... 52
IXFP38N30X3 ... 56
IXFP38N30X3M ... 56
IXFP44N25X3 ... 55
IXFP44N25X3M ... 55
IXFP50N20X3 ... 54
IXFP50N20X3M ... 54
IXFP56N30X3 ... 56
IXFP56N30X3M ... 56
IXFP60N25X3 ... 55
IXFP60N25X3M ... 55
IXFP72N20X3 ... 54
IXFP72N20X3M ... 54
IXFP72N30X3 ... 56
IXFP72N30X3M ... 56
IXFP76N15T2 ... 45
IXFP80N25X3 ... 55
IXFP90N20X3 ... 54
IXFP90N20X3M ... 54
IXFP102N15T ... 42
IXFP110N15T2 ... 45
IXFP130N10T ... 42
IXFP130N10T2 ... 44
IXFP180N10T2 ... 44
IXFP230N075T2 ... 44
IXFQ8N85X ... 59
IXFQ10N80P ... 50
IXFQ14N80P ... 50
IXFQ20N50P3 ... 52
IXFQ22N60P3 ... 53
IXFQ26N50P3 ... 52
IXFQ28N60P3 ... 53
IXFQ34N50P3 ... 52
IXFQ50N60P3 ... 53
IXFQ60N25X3 ... 55
IXFQ60N50P3 ... 52
IXFQ72N20X3 ... 54
IXFQ72N30X3 ... 56
IXFQ80N25X3 ... 55
IXFQ90N20X3 ... 54
IXFQ94N30P3 ... 52
IXFQ120N25X3 ... 55
IXFQ140N20X3 ... 55
IXFR15N100Q3 ... 60
IXFR16N120P ... 51
IXFR18N90P ... 50
IXFR20N80P ... 50
IXFR20N100P ... 51
IXFR20N120P ... 51
IXFR24N80P ... 50
IXFR24N90P ... 50
IXFR24N100Q3 ... 60
IXFR26N100P ... 51
IXFR26N120P ... 51
IXFR30N60P ... 49
IXFR32N80P ... 50
IXFR32N80Q3 ... 60
IXFR32N100P ... 51
IXFR32N100Q3 ... 60
IXFR36N50P ... 49
IXFR36N60P ... 49
IXFR40N90P ... 50
IXFR44N50P ... 49
IXFR44N50Q3 ... 60
IXFR44N80P ... 50
IXFR48N60P ... 49
IXFR48N60Q3 ... 60
IXFR64N50P ... 49
IXFR64N50Q3 ... 60
IXFR64N60P ... 49
IXFR64N60Q3 ... 60
IXFR80N50P ... 49
IXFR80N50Q3 ... 60
IXFR80N60P3 ... 53
IXFR102N30P ... 48
IXFR140N20P ... 48
IXFR140N30P ... 48
IXFR 180N10 ... 15
IXFR180N15P ... 48
IXFR200N10P ... 48
IXFR230N20T ... 42
IXFT14N80P ... 50
IXFT15N100Q3 ... 60
IXFT16N80P ... 50
IXFT16N120P ... 51
IXFT18N90P ... 50
IXFT18N100Q3 ... 60
IXFT20N80P ... 50
IXFT20N100P ... 51
IXFT24N80P ... 50
IXFT24N90P ... 50
IXFT26N60P ... 49
IXFT26N100XHV ... 11, 59
IXFT30N50P ... 49
IXFT30N50Q3 ... 60
IXFT30N60P ... 49
IXFT30N85XHV ... 11, 59
IXFT32N100XHV ... 11, 59
IXFT36N50P ... 49
IXFT36N60P ... 49
IXFT40N85XHV ... 11, 59
IXFT44N50P ... 49

Alphanumeric Index

IXFT44N50Q3 ... 60
IXFT46N30T ... 42
IXFT50N30Q3 ... 60
IXFT50N60P3 ... 53
IXFT50N85XHV ... 11, 59
IXFT60N50P3 ... 52
IXFT60N65X2HV ... 11, 58
IXFT69N30P ... 48
IXFT70N20Q3 ... 60
IXFT70N30Q3 ... 60
IXFT80N65X2HV ... 11, 58
IXFT86N30T ... 42
IXFT88N30P ... 49
IXFT94N30P3 ... 52
IXFT94N30T ... 42
IXFT96N20P ... 48
IXFT100N30X3HV ... 11, 56
IXFT120N15P ... 48
IXFT120N25T ... 42
IXFT120N25X3HV ... 11, 55
IXFT120N30X3HV ... 11, 56
IXFT140N10P ... 48
IXFT140N20X3HV ... 11, 55
IXFT150N17T2 ... 45
IXFT150N20T ... 42
IXFT150N25X3HV ... 11, 55
IXFT150N30X3HV ... 11, 56
IXFT170N25X3HV ... 11, 55
IXFT180N20X3HV ... 11, 55
IXFT220N20X3HV ... 11, 55
IXFT320N10T2 ... 44
IXFT340N075T2 ... 44
IXFT400N075T2 ... 44
IXFX20N120P ... 51
IXFX24N100Q3 ... 60
IXFX26N100P ... 51
IXFX26N120P ... 51
IXFX32N80P ... 50
IXFX32N80Q3 ... 60
IXFX32N90P ... 50
IXFX32N100P ... 51
IXFX32N100Q3 ... 60
IXFX40N90P ... 50
IXFX44N80P ... 50
IXFX44N80Q3 ... 60
IXFX48N60P ... 49
IXFX48N60Q3 ... 60
IXFX52N100X ... 59
IXFX64N50P ... 49
IXFX64N50Q3 ... 60
IXFX64N60P ... 49
IXFX64N60P3 ... 53
IXFX64N60Q3 ... 60
IXFX66N85X ... 59
IXFX78N50P3 ... 52
IXFX80N50P ... 49
IXFX80N50Q3 ... 60
IXFX80N60P3 ... 53
IXFX98N50P3 ... 52
IXFX100N65X2 ... 58
IXFX120N25P ... 48
IXFX120N30P3 ... 52
IXFX120N30T ... 42
IXFX120N65X2 ... 58
IXFX140N25T ... 42
IXFX140N30P ... 49
IXFX150N30P3 ... 52
IXFX160N30T ... 42
IXFX170N20P ... 48
IXFX170N20T ... 42
IXFX 180N10 ... 15
IXFX180N15P ... 48
IXFX180N25T ... 42
IXFX200N10P ... 48
IXFX210N30X3 ... 56
IXFX220N15P ... 48
IXFX220N17T2 ... 45
IXFX230N20T ... 42
IXFX240N15T2 ... 45
IXFX240N25X3 ... 55
IXFX250N10P ... 48
IXFX300N20X3 ... 55
IXFX320N17T2 ... 45
IXFX360N10T ... 42
IXFX360N15T2 ... 45
IXFX420N10T ... 42
IXFX520N075T2 ... 44
IXFY4N85X ... 59
IXFY8N65X2 ... 57
IXFY26N30X3 ... 56
IXFY30N25X3 ... 55
IXFY36N20X3 ... 54
IXFZ140N25T ... 42
IXFZ520N075T2 ... 44
IXG20I3300FB ... 34
IXG50I4500KN ... 34
IXG70IF1200NA ... 32
IXGA12N120A3 ... 33
IXGA20N120A3 ... 33
IXGA20N250HV ... 34
IXGA48N60A3 ... 33
IXGF20N250 ... 22, 34
IXGF25N250 ... 22, 34
IXGF32N170 ... 22
IXGH12N120A3 ... 33
IXGH20N120A3 ... 33
IXGH25N250 ... 34
IXGH32N120A3 ... 33
IXGH48N60A3 ... 33
IXGH48N60A3D1 ... 33
IXGH72N60A3 ... 33
IXGK55N120A3H1 ... 33
IXGK75N250 ... 34
IXGK82N120A3 ... 33
IXGK120N120A3 ... 33
IXGK320N60A3 ... 33
IXGL75N250 ... 34
IXGN320N60A3 ... 33
IXGN400N60A3 ... 33
IXGP12N120A3 ... 33
IXGP20N120A3 ... 33
IXGP36N60A3 ... 33
IXGP48N60A3 ... 33
IXGT25N250 ... 34
IXGT25N250HV ... 34
IXGT32N100A3 ... 33
IXGT32N120A3 ... 33
IXGT72N60A3 ... 33
IXGX55N120A3H1 ... 33
IXGX75N250 ... 34
IXGX82N120A3 ... 33
IXGX120N60A3 ... 33
IXGX120N120A3 ... 33
IXTA1N100P ... 47
IXTA1N120P ... 47
IXTA1N170DHV ... 65
IXTA1N200P3HV ... 10, 61
IXTA1R4N100P ... 47
IXTA1R4N120P ... 47
IXTA1R6N50D2 ... 65
IXTA1R6N100D2 ... 65
IXTA2N100P ... 47
IXTA02N250HV ... 10, 61
IXTA2R4N120P ... 47
IXTA3N50D2 ... 65
IXTA3N100D2 ... 65
IXTA3N100D2HV ... 10, 65
IXTA3N100P ... 47
IXTA3N120 ... 62
IXTA3N120HV ... 10, 62
IXTA3N150HV ... 10, 62
IXTA4N65X2 ... 57
IXTA4N70X2 ... 59
IXTA4N150HV ... 10, 62
IXTA05N100HV ... 10, 62
IXTA05N100P ... 47
IXTA6N50D2 ... 65
IXTA6N100D2 ... 65
IXTA06N120P ... 47
IXTA08N50D2 ... 65
IXTA8N65X2 ... 57
IXTA8N70X2 ... 59
IXTA08N100D2 ... 65
IXTA08N100D2HV ... 10, 65
IXTA08N100P ... 47
IXTA08N120P ... 47
IXTA10N60P ... 47
IXTA10P15T ... 68
IXTA10P50P ... 67
IXTA12N50P ... 47
IXTA12N65X2 ... 57
IXTA12N70X2 ... 59
IXTA14N60P ... 47
IXTA15N50L2 ... 64
IXTA15P15T ... 68
IXTA16N50P ... 47
IXTA18P10T ... 68
IXTA20N65X2 ... 57
IXTA24N65X2 ... 57
IXTA24P085T ... 68
IXTA26P10T ... 68
IXTA26P20P ... 67
IXTA28P065T ... 68
IXTA30N25L2 ... 64
IXTA30N65X2 ... 57
IXTA32P05T ... 68
IXTA32P20T ... 68
IXTA34N65X2 ... 57
IXTA36N30P ... 46
IXTA36P15P ... 67
IXTA42N25P ... 46
IXTA44P15T ... 68
IXTA48N20T ... 41
IXTA48P05T ... 68
IXTA50N20P ... 46
IXTA50N25T ... 41
IXTA52P10P ... 67
IXTA60N10T ... 41
IXTA60N20T ... 41
IXTA60N20X4 ... 55
IXTA62N15P ... 46
IXTA64N10L2 ... 64
IXTA70N075T2 ... 43
IXTA75N10P ... 46
IXTA76N25T ... 41
IXTA76P10T ... 68
IXTA80N12T2 ... 43
IXTA80N075L2 ... 64
IXTA86N20T ... 41
IXTA86N20X4 ... 55
IXTA90N055T2 ... 43
IXTA90N075T2 ... 43
IXTA94N20X4 ... 55
IXTA96P085T ... 68
IXTA100N04T2 ... 43
IXTA100N15X4 ... 54
IXTA110N055T2 ... 43
IXTA120N04T2 ... 43
IXTA120N075T2 ... 43
IXTA120P065T ... 68
IXTA130N10T ... 41
IXTA130N15X4 ... 54
IXTA130N065T2 ... 43
IXTA140N055T2 ... 43
IXTA140P05T ... 68
IXTA150N15X4 ... 54
IXTA160N04T2 ... 43
IXTA170N075T2 ... 43
IXTA180N10T ... 41
IXTA200N055T2 ... 43
IXTA220N04T2 ... 43
IXTA230N075T2 ... 43
IXTA260N055T2 ... 43
IXTA300N04T2 ... 43
IXTB30N100L ... 63
IXTF1N250 ... 22, 61
IXTF1N450 ... 22, 61
IXTF1R4N450 ... 22, 61
IXTF2N300P3 ... 22, 61
IXTF02N450 ... 22, 61
IXTF6N200P3 ... 22, 61
IXTF200N10T ... 22, 41
IXTH1N170DHV ... 65
IXTH1N200P3 ... 61
IXTH1N200P3HV ... 13, 61
IXTH1N250 ... 61
IXTH1N300P3HV ... 13, 61
IXTH1N450HV ... 13, 61
IXTH1R4N250P3 ... 61
IXTH1R8N220P3HV ... 13, 61
IXTH2N150L ... 63
IXTH2N170D2 ... 65

©2023 Littelfuse, Inc

IXTH02N250 61
IXTH2N300P3HV 13, 61
IXTH02N450HV 13, 61
IXTH2R4N120P 47
IXTH3N100P 47
IXTH3N120 62
IXTH3N150 62
IXTH3N200P3HV 13, 61
IXTH4N100L 63
IXTH4N150 62
IXTH04N300P3HV 13, 61
IXTH05N250P3HV 13, 61
IXTH6N50D2 65
IXTH6N100D2 65
IXTH6N120 62
IXTH6N150 62
IXTH06N220P3HV 13, 61
IXTH10N100D2 65
IXTH10P50P 67
IXTH12N65X2 57
IXTH12N70X2 59
IXTH12N100L 63
IXTH15N50L2 64
IXTH16N10D2 65
IXTH16N20D2 65
IXTH16N50D2 65
IXTH16P60P 67
IXTH20N65X2 57
IXTH20P50P 67
IXTH22N50P 47
IXTH24N50L 63
IXTH24N65X2 57
IXTH26N60P 47
IXTH26P20P 67
IXTH30N25L2 64
IXTH30N50L2 64
IXTH30N50P 47
IXTH30N60L2 64
IXTH30N60P 47
IXTH30N65X2 57
IXTH32P20T 68
IXTH34N65X2 57
IXTH36N50P 47
IXTH36P15P 67
IXTH38N30L2 64
IXTH40N50L2 64
IXTH44N25L2 64
IXTH44P15T 68
IXTH48N65X2 57
IXTH48P20P 67
IXTH50N25T 41
IXTH50N30L2 64
IXTH52P10P 67
IXTH58N25L2 64
IXTH60N20L2 64
IXTH60N20X4 55
IXTH62N65X2 57
IXTH64N10L2 64
IXTH68P20T 68
IXTH75N10L2 64
IXTH76N25T 41
IXTH76P10T 68
IXTH80N20L 63
IXTH80N65X2 57
IXTH80N075L2 64
IXTH86N25T 41
IXTH88N30P 47
IXTH90P10P 67
IXTH94N20X4 55
IXTH96N20P 46
IXTH96N25T 41
IXTH96P085T 68
IXTH110N10L2 64
IXTH110N25T 41
IXTH120N20X4 55
IXTH120P065T 68
IXTH130N10T 41
IXTH130N15X4 54
IXTH130N20T 41
IXTH140N075L2 64
IXTH140P05T 68
IXTH140P10T 68
IXTH150N15X4 54
IXTH180N10T 41
IXTH200N10T 41
IXTH220N20X4 55
IXTH240N15X4 54
IXTH260N055T2 43
IXTH300N04T2 43
IXTH360N055T2 43
IXTH420N04T2 43
IXTH440N055T2 43
IXTH500N04T2 43
IXTJ3N150 ..... 14, 62
IXTJ4N150 ..... 14, 62
IXTJ6N150 ..... 14, 62
IXTK3N250L 63
IXTK5N250 61
IXTK8N150L 63
IXTK17N120L 63
IXTK22N100L 63
IXTK32P60P 67
IXTK40P50P 67
IXTK46N50L 63
IXTK60N50L2 64
IXTK80N30L2 64
IXTK82N25P 46
IXTK88N30P 47
IXTK90N25L2 64
IXTK90P20P 67
IXTK100N25P 46
IXTK102N30P 47
IXTK102N65X2 57
IXTK110N20L2 64
IXTK120N20P 46
IXTK120N25P 46
IXTK120N65X2 57
IXTK120P20T 68
IXTK140N20P 46
IXTK140N30P 47
IXTK150N15P 46
IXTK170N10P 46
IXTK170P10P 67
IXTK180N15P 46
IXTK200N10L2 64
IXTK200N10P 46
IXTK210P10T 68
IXTK240N075L2 64
IXTK400N15X4 54
IXTK550N055T2 43
IXTK600N04T2 43
IXTL2N450 61
IXTL2N470 61
IXTN3N250L 63
IXTN5N250 61
IXTN8N150L 63
IXTN17N120L 63
IXTN22N100L 63
IXTN30N100L 63
IXTN32P60P 67
IXTN40P50P 67
IXTN46N50L 63
IXTN60N50L2 64
IXTN80N30L2 64
IXTN90N25L2 64
IXTN90P20P 67
IXTN102N65X2 57
IXTN110N20L2 64
IXTN120P20T 68
IXTN170P10P 67
IXTN200N10L2 64
IXTN200N10T 41
IXTN210P10T 68
IXTN240N075L2 64
IXTN400N15X4 54
IXTN550N055T2 43
IXTN600N04T2 43
IXTP1N100P 47
IXTP1N120P 47
IXTP1R4N100P 47
IXTP1R4N120P 47
IXTP1R6N50D2 65
IXTP1R6N100D2 65
IXTP2N65X2 57
IXTP2N100P 47
IXTP02N120P 47
IXTP2R4N120P 47
IXTP3N50D2 65
IXTP3N100D2 65
IXTP3N100P 47
IXTP3N120 62
IXTP4N65X2 57
IXTP4N70X2 59
IXTP4N70X2M 59
IXTP05N100P 47
IXTP6N50D2 65
IXTP6N100D2 65
IXTP06N120P 47
IXTP08N50D2 65
IXTP8N65X2 57
IXTP8N65X2M 57
IXTP8N70X2 59
IXTP8N70X2M 59
IXTP08N100D2 65
IXTP08N100P 47
IXTP08N120P 47
IXTP10N60P 47
IXTP10P15T 68
IXTP10P50P 67
IXTP12N50P 47
IXTP12N65X2 57
IXTP12N65X2M 57
IXTP12N70X2 59
IXTP12N70X2M 59
IXTP14N60P 47
IXTP15N50L2 64
IXTP15P15T 68
IXTP16N50P 47
IXTP18P10T 68
IXTP20N65X2 57
IXTP20N65X2M 57
IXTP24N65X2 57
IXTP24N65X2M 57
IXTP24P085T 68
IXTP26P10T 68
IXTP26P20P 67
IXTP28P065T 68
IXTP30N25L2 64
IXTP30N65X2 57
IXTP32P05T 68
IXTP32P20T 68
IXTP34N65X2 57
IXTP36N30P 46
IXTP36P15P 67
IXTP42N25P 46
IXTP44N10T 41
IXTP44P15T 68
IXTP48N20T 41
IXTP48P05T 68
IXTP50N20P 46
IXTP50N25T 41
IXTP52P10P 67
IXTP60N10T 41
IXTP60N20T 41
IXTP60N20X4 55
IXTP62N15P 46
IXTP64N10L2 64
IXTP70N075T2 43
IXTP75N10P 46
IXTP76N25T 41
IXTP76P10T 68
IXTP80N10T 41
IXTP80N12T2 43
IXTP80N075L2 64
IXTP86N20T 41
IXTP86N20X4 55
IXTP90N055T2 43
IXTP90N075T2 43
IXTP94N20X4 55
IXTP96P085T 68
IXTP100N04T2 43
IXTP100N15X4 54
IXTP110N055T2 43
IXTP120N04T2 43
IXTP120N20X4 55
IXTP120N075T2 43
IXTP120P065T 68
IXTP130N10T 41
IXTP130N15X4 54
IXTP130N065T2 43
IXTP140N055T2 43
IXTP140P05T 68

Alphanumeric Index

IXTP150N15X4 54
IXTP160N04T2 43
IXTP170N13X4 54
IXTP170N075T2 43
IXTP180N10T 41
IXTP200N055T2 43
IXTP220N04T2 43
IXTP230N075T2 43
IXTP260N055T2 43
IXTP300N04T2 43
IXTQ10P50P 67
IXTQ14N60P 47
IXTQ16N50P 47
IXTQ18N60P 47
IXTQ22N50P 47
IXTQ22N60P 47
IXTQ26N50P 47
IXTQ26N60P 47
IXTQ26P20P 67
IXTQ30N50L2 64
IXTQ30N50P 47
IXTQ30N60L2 64
IXTQ30N60P 47
IXTQ32P20T 68
IXTQ34N65X2M 57
IXTQ36N30P 46
IXTQ36N50P 47
IXTQ36P15P 67
IXTQ40N50L2 64
IXTQ42N25P 46
IXTQ44N50P 47
IXTQ44P15T 68
IXTQ48N20T 41
IXTQ48N65X2M 57
IXTQ50N20P 46
IXTQ50N25T 41
IXTQ52N30P 46
IXTQ52P10P 67
IXTQ60N10T 41
IXTQ60N20L2 64
IXTQ60N20T 41
IXTQ62N15P 46
IXTQ64N25P 46
IXTQ69N30P 47
IXTQ74N20P 46
IXTQ75N10P 46
IXTQ76N25T 41
IXTQ82N25P 46
IXTQ86N20T 41
IXTQ86N25T 41
IXTQ88N30P 47
IXTQ96N15P 46
IXTQ96N20P 46
IXTQ96N25T 41
IXTQ100N25P 46
IXTQ110N10P 46
IXTQ120N15P 46
IXTQ120N20P 46
IXTQ130N10T 41
IXTQ140N10P 46
IXTQ150N15P 46
IXTQ170N10P 46
IXTQ180N10T 41
IXTQ200N10T 41
IXTR16P60P 67
IXTR20P50P 67
IXTR32P60P 67
IXTR36P15P 67
IXTR40P50P 67
IXTR48P20P 67
IXTR68P20T 68
IXTR90P10P 67
IXTR90P20P 67
IXTR102N65X2 57
IXTR120P20T 68
IXTR140P10T 68
IXTR170P10P 67
IXTR200N10P 46
IXTR210P10T 68
IXTT1N250HV 11, 61
IXTT1N300P3HV 11, 61
IXTT1N450HV 11, 61
IXTT2N170D2 65
IXTT2N300P3HV 11, 61
IXTT02N450HV 11, 61
IXTT3N200P3HV 11, 61
IXTT4N150HV 11, 62
IXTT6N120 62
IXTT6N150 62
IXTT10N100D2 65
IXTT12N150HV 11, 62
IXTT16N10D2 65
IXTT16N20D2 65
IXTT16N50D2 65
IXTT16P60P 67
IXTT20P50P 67
IXTT26N50P 47
IXTT26N60P 47
IXTT30N50L2 64
IXTT30N50P 47
IXTT30N60L2 64
IXTT30N60P 47
IXTT34N65X2HV 11, 57
IXTT36N50P 47
IXTT38N30L2 64
IXTT40N50L2 64
IXTT44N25L2HV 11, 64
IXTT48P20P 67
IXTT52N30P 46
IXTT60N20L2 64
IXTT64N25P 46
IXTT68P20T 68
IXTT69N30P 47
IXTT74N20P 46
IXTT75N10L2 64
IXTT80N20L 63
IXTT82N25P 46
IXTT88N30P 47
IXTT90P10P 67
IXTT96N15P 46
IXTT96N20P 46
IXTT100N25P 46
IXTT110N10L2 64
IXTT110N10P 46
IXTT120N15P 46
IXTT140N10P 46
IXTT140N075L2HV 11, 64
IXTT140P10T 68
IXTT170N10P 46
IXTT220N20X4HV 55
IXTT240N15X4HV 11, 54
IXTT360N055T2 43
IXTT440N055T2 43
IXTT500N04T2 43
IXTU4N70X2 59
IXTU8N70X2 59
IXTX1R4N450HV 13, 61
IXTX3N250L 63
IXTX4N300P3HV 13, 61
IXTX5N250 61
IXTX6N200P3HV 13, 61
IXTX8N150L 63
IXTX17N120L 63
IXTX22N100L 63
IXTX32P60P 67
IXTX40P50P 67
IXTX46N50L 63
IXTX60N50L2 64
IXTX80N30L2 64
IXTX90N25L2 64
IXTX90P20P 67
IXTX102N65X2 57
IXTX110N20L2 64
IXTX120P20T 68
IXTX170P10P 67
IXTX200N10L2 64
IXTX210P10T 68
IXTX240N075L2 64
IXTX400N15X4 54
IXTX550N055T2 43
IXTX600N04T2 43
IXTY1N100P 47
IXTY1R4N100P 47
IXTY1R4N120P 47
IXTY1R4N120PHV 9, 47
IXTY1R6N50D2 65
IXTY1R6N100D2 65
IXTY2N65X2 57
IXTY2N100P 47
IXTY02N120P 47
IXTY4N65X2 57
IXTY4N70X2 59
IXTY08N50D2 65
IXTY8N65X2 57
IXTY8N70X2 59
IXTY08N100D2 65
IXTY08N100P 47
IXTY10P15T 68
IXTY15P15T 68
IXTY18P10T 68
IXTY26P10T 68
IXTY32P05T 68
IXTY44N10T 41
IXTY48P05T 68
IXTY90N055T2 43
IXTZ550N055T2 43
IXXA50N60B3 26
IXXH30N60B3 26
IXXH30N60B3D1 26
IXXH30N60C3 26
IXXH30N60C3D1 26
IXXH30N65B4 28
IXXH40N65B4 28
IXXH40N65B4H1 28
IXXH50N60B3 26
IXXH50N60B3D1 26
IXXH50N60C3 26
IXXH50N60C3D1 26
IXXH60N65B4 28
IXXH60N65B4H1 28
IXXH60N65C4 28
IXXH75N60B3 26
IXXH75N60B3D1 26
IXXH75N60C3 26
IXXH75N60C3D1 26
IXXH80N65B4 28
IXXH80N65B4H1 28
IXXH100N60B3 26
IXXH100N60C3 26
IXXH110N65B4 28
IXXH110N65C4 28
IXXH140N65B4 28
IXXH140N65C4 28
IXXK100N60B3H1 26
IXXK100N60C3H1 26
IXXK110N65B4H1 28
IXXK160N65B4 28
IXXK160N65C4 28
IXXK200N60B3 26
IXXK200N60C3 26
IXXK200N65B4 28
IXXK300N60B3 26
IXXK300N60C3 26
IXXN100N60B3H1 26
IXXN110N65B4H1 28
IXXN110N65C4H1 28
IXXN200N60B3 26
IXXN200N60B3H1 26
IXXN200N60C3H1 26
IXXN200N65A4 28
IXXN340N65B4 28
IXXP12N65B4 28
IXXP12N65B4D1 28
IXXP50N60B3 26
IXXQ30N60B3M 26
IXXR100N60B3H1 26
IXXR110N65B4H1 28
IXXX100N60B3H1 26
IXXX100N60C3H1 26
IXXX110N65B4H1 28
IXXX140N65B4H1 28
IXXX160N65B4 28
IXXX160N65C4 28
IXXX200N60B3 26
IXXX200N60C3 26
IXXX200N65B4 28
IXXX300N60B3 26
IXXX300N60C3 26
IXYA8N90C3D1 31
IXYA8N250CHV 10, 30
IXYA12N250CHV 10, 30
IXYA15N65C3D1 27

©2023 Littelfuse, Inc

IXYA20N65B3 27
IXYA20N65C3 27
IXYA20N65C3D1..... 27
IXYA20N120A4HV 10, 29
IXYA20N120B4HV 10, 29
IXYA20N120C3HV 10, 31
IXYA20N120C4HV 10, 29
IXYA30N120A4HV 10, 29
IXYA50N65C3 27
IXYB82N120C3H1 31
IXYF16N250CV1 ..... 22, 30
IXYF20N400C 34
IXYF30N170CV1 ..... 22, 30
IXYF30N400..... 34
IXYF30N400V1 34
IXYF30N450..... 22, 34
IXYF40N450..... 22, 34
IXYH8N250CHV..... 13, 30
IXYH8N250CV1HV 13, 30
IXYH10N170C 30
IXYH10N170CV1..... 30
IXYH12N250CHV..... 13, 30
IXYH12N250CV1HV 13, 30
IXYH16N170C..... 30
IXYH16N170CV1 30
IXYH16N250CV1HV 13, 30
IXYH20N65B3..... 27
IXYH20N65C3..... 27
IXYH20N120C3..... 31
IXYH20N120C3D1 31
IXYH24N90C3..... 31
IXYH24N90C3D1 31
IXYH24N170C..... 30
IXYH24N170CV1 30
IXYH25N250CHV..... 13, 30
IXYH30N65C3..... 27
IXYH30N65C3H1 27
IXYH30N120A4..... 29
IXYH30N120B4..... 29
IXYH30N120C3..... 31
IXYH30N120C3D1 31
IXYH30N120C4..... 29
IXYH30N170C..... 30
IXYH30N450HV 13, 34
IXYH40N65B3..... 27
IXYH40N65B3D1 27
IXYH40N65C3..... 27
IXYH40N65C3H1 27
IXYH40N90C3..... 31
IXYH40N90C3D1 31
IXYH40N120A4..... 29
IXYH40N120B3..... 31
IXYH40N120B3D1 31
IXYH40N120B4..... 29
IXYH40N120B4H1 29
IXYH40N120C3..... 31
IXYH40N120C3D1 31
IXYH40N120C4..... 29
IXYH40N120C4H1 29
IXYH50N65C3..... 27
IXYH50N65C3H1 27
IXYH50N120C3..... 31
IXYH50N120C3D1 31
IXYH55N120A4..... 29
IXYH55N120B4H1 29
IXYH55N120C4..... 29
IXYH55N120C4H1 29
IXYH60N90C3..... 31
IXYH75N65C3..... 27
IXYH75N65C3H1 27
IXYH80N90C3..... 31
IXYH82N120C3..... 31
IXYH85N120A4..... 29
IXYH85N120C4..... 29
IXYH90N65A5..... 28
IXYH100N65A3..... 27
IXYH100N65B3..... 27
IXYH100N65C3..... 27
IXYH120N65A5..... 28
IXYH120N65B3..... 27
IXYH120N65C3..... 27
IXYK30N170CV1..... 30
IXYK85N120C4H1 29
IXYK100N65C3D1 27
IXYK100N120B3 31
IXYK100N120C3 31
IXYK110N120A4 29
IXYK110N120B4..... 29
IXYK110N120C4..... 29
IXYK120N120B3 31
IXYK120N120C3 31
IXYK140N90C3 31
IXYK140N120A4..... 29
IXYK200N65B3..... 27
IXYK300N65A3..... 27
IXYL40N250CV1 30
IXYL50N170CV1 30
IXYL60N450..... 34
IXYN30N170CV1 30
IXYN50N170CV1 30
IXYN80N90C3H1 31
IXYN82N120C3..... 31
IXYN82N120C3H1 31
IXYN85N120C4H1 29
IXYN100N65A3 27
IXYN100N65C3H1 27
IXYN100N120B3H1 31
IXYN100N120C3..... 31
IXYN100N120C3H1 31
IXYN110N120A4 29
IXYN110N120B4H1..... 29
IXYN110N120C4 29
IXYN110N120C4H1..... 29
IXYN120N120C3..... 31
IXYN140N120A4..... 29
IXYN300N65A3 27
IXYP8N90C3 31
IXYP8N90C3D1..... 31
IXYP10N65C3 27
IXYP15N65C3 27
IXYP15N65C3D1..... 27
IXYP20N65B3 27
IXYP20N65C3D1..... 27
IXYP20N120A4..... 29
IXYP20N120B4 29
IXYP20N120C3 31
IXYP20N120C4 29
IXYP30N65C3 27
IXYP30N120A4..... 29
IXYP30N120C3 31
IXYP50N65C3 27
IXYP60N65A5..... 28
IXYQ40N65C3D1..... 27
IXYR50N120C3D1 31
IXYR100N120C3 31
IXYT12N250CV1HV.....11, 30
IXYT20N120C3D1HV.....11, 31
IXYT25N250CHV 11, 30
IXYT30N65C3H1HV.....11, 27
IXYT30N450HV.....11, 34
IXYT40N120A4HV 11, 29
IXYT55N120A4HV 11, 29
IXYT80N90C3 31
IXYT85N120A4HV 11, 29
IXYX25N250CV1 30
IXYX25N250CV1HV 13, 30
IXYX30N170CV1 30
IXYX40N250CHV..... 13, 30
IXYX40N450HV 13, 34
IXYX50N170C..... 30
IXYX100N65C3D1 27
IXYX100N120B3..... 31
IXYX100N120C3..... 31
IXYX110N120A4 29
IXYX110N120B4 29
IXYX110N120C4 29
IXYX120N120B3..... 31
IXYX120N120C3..... 31
IXYX140N90C3..... 31
IXYX140N120A4..... 29
IXYX200N65B3..... 27
IXYX300N65A3 27
IXYY8N90C3..... 31

K

K2xx0yHU..... 98
K0443LC600..... 156
K0443LC650..... 156
K0769NC600..... 156
K0769NC650..... 156
K0890NC360..... 156
K0890NC420..... 156
K1121NC320 156
K1121NC360 156
K1197NC280..... 156
K1197NC320..... 156
K1351VF600..... 156
K1351VF620..... 156
K1351VF640..... 156
K1351VF650..... 156
K1947ZC400..... 156
K1947ZC450..... 157
K1947ZD400 157
K1947ZD450..... 157
K2085TE600..... 157
K2085TE650..... 157
K2095ZC360..... 157
K2095ZC420..... 157
K2095ZD360 157
K2095ZD420 157
K2325TJ600 157
K2325TJ650 157
K3745EA600 157
K3745EA650..... 157
K4005EA480 157
K4005EA520 157
K4215EA420 157
K4215EA450 157
Kxxx0yH..... 98
Kxxx0yU 98
Kxxx1G 98
Kxxx1GL 98
Kxxxzy..... 98

L

L01..... 97
L0001HC600XXX..... 176
L0001NC600XXX 176
L0001QC600XXX 176
L0001TC600XXX..... 176
L0001YC600XXX..... 176
L0001ZF600XXX 176
L0103NERP 96
L0107NTRP 96
L0109NERP 96
LAA100 122
LAA100L 122
LAA108..... 122
LAA110 122
LAA110L 122
LAA120 122
LAA120L 122
LAA125 122
LAA125L 122
LAA127 122
LAA127L 122
LAA710..... 122
LBA110 124
LBA110L 124
LBA120..... 124
LBA120L..... 124
LBA127..... 124
LBA127L..... 124
LBA710..... 124
LBA716..... 124
LBB110 123
LBB120..... 123
LBB126..... 123
LBB127..... 123
LCA100..... 121
LCA100L..... 121
LCA110 121
LCA110L 121
LCA120..... 121
LCA120L..... 121
LCA125..... 121
LCA125L..... 121
LCA127..... 121
LCA127L..... 121
LCA129..... 121
LCA182..... 121
LCA210..... 124
LCA210L..... 124
LCA220..... 124

Alphanumeric Index

LCA701 ... 121
LCA710 ... 121
LCA712 ... 121
LCA715 ... 121
LCA717 ... 121
LCB110 ... 123
LCB111 ... 123
LCB120 ... 123
LCB126 ... 123
LCB127 ... 123
LCB710 ... 123
LCB716 ... 123
LCB717 ... 123
LCC110 ... 124
LCC120 ... 124
LF2101NTR ... 131
LF2103NTR ... 131
LF2104NTR ... 131
LF2106NTR ... 131
LF2110BTR ... 131
LF2113BTR ... 131
LF2136BTR ... 132
LF2181NTR ... 131
LF2184NTR ... 131
LF2304NTR ... 131
LF2388BTR ... 132
LF21064NTR ... 131
LF21814NTR ... 131
LF21844NTR ... 131
LF21904NTR ... 131
LFF2190NTR ... 131
LJ6004D8RP ... 96
LJxx04xx ... 98
LJxx06xx ... 98
LJxx08xx ... 98
LKK47 ... 69
LOC110 ... 135
LOC111 ... 135
LOC112 ... 135
LOC117 ... 135
LSIC1MO120E0080 ... 70
LSIC1MO120E0120 ... 70
LSIC1MO120E0160 ... 70
LSiC1MO120G0025 ... 14
LSIC1MO120G0025 ... 70
LSiC1MO120G0040 ... 14
LSIC1MO120G0040 ... 70
LSIC1MO120T0080 ... 70
LSIC1MO120T0120 ... 70
LSIC1MO120T0160 ... 70
LSIC1MO170E0750 ... 70
LSIC1MO170H0750 ... 70
LSIC1MO170T0750 ... 70
LSIC2SB170B10A ... 85
LSIC2SB170B25A ... 85
LSIC2SB170B50A ... 85
LSIC2SC120E20CCA ... 85
LSIC2SC120E30CCA ... 85
LSIC2SC120E40CCA ... 85
LSIC2SD065A10A ... 85
LSIC2SD065A20A ... 85
LSIC2SD065D10A ... 9, 85
LSIC2SD065D20A ... 9, 85
LSIC2SD065E20CCA ... 85
LSIC2SD065E40CCA ... 85
LSIC2SD120A10A ... 85
LSIC2SD120A20A ... 85
LSIC2SD120D10A ... 9, 85
LSIC2SD120D20A ... 9, 85
LSIC2SD120N40PA ... 85
LSIC2SD120N80PA ... 85
LSIC2SD120N120PA ... 85
LW0428RE250 ... 136
Lx01Ex ... 97
LX8 ... 97
LX807MBRP ... 96
LX807MTRP ... 96
LxNx ... 97
Lxx04xx ... 97
Lxx06xx ... 97
LxX8Ex ... 97
Lxx08xx ... 97
LxXx ... 97

M

M0130RL200 ... 145
M0130RL250 ... 145
M0130RM200 ... 145
M0130RM250 ... 145
M0130SL200 ... 145
M0130SL250 ... 145
M0130SM200 ... 145
M0130SM250 ... 145
M0139RL120 ... 145
M0139RL180 ... 145
M0139RM120 ... 145
M0139RM180 ... 145
M0139SL120 ... 145
M0139SL180 ... 145
M0139SM120 ... 145
M0139SM180 ... 145
M0225YH300 ... 146
M0225YH360 ... 146
M0225YH450 ... 146
M0268RC200 ... 145
M0268RC250 ... 145
M0268RJ200 ... 145
M0268RJ250 ... 145
M0268SC200 ... 145
M0268SC250 ... 145
M0268SJ200 ... 145
M0268SJ250 ... 145
M0280RC200 ... 145
M0280RC250 ... 145
M0280RJ200 ... 145
M0280RJ250 ... 145
M0280SC200 ... 145
M0280SC250 ... 145
M0280SJ200 ... 145
M0280SJ250 ... 145
M0310YH300 ... 146
M0310YH350 ... 146
M0334RC120 ... 145
M0334RC200 ... 145
M0334RJ120 ... 145
M0334RJ200 ... 145
M0334SC120 ... 145
M0334SC200 ... 145
M0334SJ120 ... 145
M0334SJ200 ... 145
M0336RA120 ... 145
M0336RA140 ... 145
M0336SA120 ... 145
M0336SA140 ... 145
M0347WC160 ... 146
M0347WC200 ... 146
M0347WC250 ... 146
M0358WC120 ... 146
M0358WC180 ... 146
M0367WC140 ... 146
M0367WC220 ... 146
M0367WC280 ... 146
M0371YH350 ... 146
M0371YH450 ... 146
M0433WC120 ... 146
M0433WC160 ... 146
M0433WC200 ... 146
M0437WC080 ... 146
M0437WC140 ... 146
M0451YC120 ... 146
M0451YC160 ... 146
M0451YC200 ... 146
M0588LC400 ... 143
M0588LC450 ... 143
M0659LC400 ... 146
M0659LC450 ... 146
M0710LC560 ... 146
M0710LC600 ... 146
M0736LC400 ... 146
M0736LC450 ... 146
M0759YC120 ... 146
M0759YC160 ... 146
M0759YH120 ... 146
M0759YH160 ... 146
M0790YC200 ... 143
M0790YC250 ... 143
M0790YH200 ... 143
M0790YH250 ... 143
M0859LC140 ... 146
M0859LC180 ... 146
M0863LC260 ... 147
M0863LC300 ... 147
M0863LC360 ... 147
M0872LC140 ... 147
M0872LC180 ... 147
M0872LC210 ... 147
M0914LC200 ... 143
M0914LC250 ... 143
M0955LC200 ... 147
M0955LC250 ... 147
M1010NC400 ... 143
M1010NC450 ... 143
M1010ND400 ... 143
M1010ND450 ... 143
M1022LC120 ... 147
M1022LC160 ... 147
M1022LC200 ... 147
M1080LC100 ... 147
M1080LC120 ... 147
M1102NC500 ... 147
M1102NC600 ... 147
M1102ND500 ... 147
M1102ND600 ... 147
M1104NC400 ... 147
M1104NC450 ... 147
M1104ND400 ... 147
M1104ND450 ... 147
M1163NC400 ... 143
M1163NC450 ... 143
M1163ND400 ... 143
M1163ND450 ... 143
M1242NC260 ... 147
M1242NC360 ... 147
M1242ND260 ... 147
M1242ND360 ... 147
M1494NC160 ... 147
M1494NC250 ... 147
M1494ND160 ... 147
M1494ND250 ... 147
M1494NK160 ... 147
M1494NK250 ... 147
M1502NC200 ... 143
M1502NC250 ... 143
M1502ND200 ... 143
M1502ND250 ... 143
M1565VC400 ... 147
M1565VC450 ... 147
M1565VF400 ... 147
M1565VF450 ... 147
M1583VC400 ... 143
M1583VC450 ... 143
M1583VF400 ... 143
M1583VF450 ... 143
M1609NC200 ... 143
M1609NC260 ... 143
M1609ND200 ... 143
M1609ND260 ... 143
M1858NC100 ... 147
M1858NC120 ... 147
M1858ND100 ... 147
M1858ND120 ... 147
M2273VC300 ... 143
M2273VC360 ... 143
M2273VF300 ... 143
M2273VF360 ... 143
M2322ZC300 ... 147
M2322ZC400 ... 147
M2322ZD300 ... 147
M2322ZD400 ... 147
M2325HA400 ... 143
M2325HA450 ... 143
M2408NC020 ... 143
M2408NC060 ... 143
M2408ND020 ... 143
M2408ND060 ... 143
M2413VC200 ... 147
M2413VC250 ... 147
M2413VF200 ... 147
M2413VF250 ... 147
M2505MC220 ... 147
M2505MC250 ... 147
M2639ZC360 ... 143
M2639ZC420 ... 143

©2023 Littelfuse, Inc

M2639ZD360 143
M2639ZD420 143
M2698ZC250..... 143
M2698ZC280..... 144
M2698ZC350..... 144
M2698ZD250 144
M2698ZD280 144
M2698ZD350 144
M2837VC180 144
M2837VC250 144
M2837VF180..... 144
M2837VF250..... 144
M3560TJ420 147
M3560TJ450 147
M3770ZC200 144
M3770ZC240..... 144
M3770ZC300 144
M3770ZD200 144
M3770ZD240 144
M3770ZD300 144
M4305TJ240 147
M4305TJ280 147
MBR1045..... 76
MBR1060CTL..... 76
MBR2060CT..... 76
MBR6045WT..... 76
MBR10100CT 76
MBR10150CT 77
MBR10200CT..... 77
MBR20100CTP..... 76
MBR20150CT 77
MBR40100WT..... 76
MBRB1060CT..... 76
MBRB2060CT 76
MBRB10100CT..... 76
MBRB20100CT..... 76
MBRD10100CT..... 76
MBRD10150CT..... 77
MBRD10200CT 77
MBRF1060CTL..... 76
MBRF2045CT..... 76
MBRF2060CT..... 76
MBRF3060CT..... 76
MBRF10100CTL 76
MBRF10100CTR..... 76
MBRF10150CTL 77
MBRF10200CT..... 77
MBRF20100CTP..... 76
MBRF20150CT 77
MBRF20200CT..... 77
MBRF20200CTR 77
MBRF30100CTP..... 76
MBRF30150CT 77
MBRF30200CT..... 77
MCB20P1200LB..... 17, 71
MCB30P1200LB..... 17, 71
MCB40P1200LB..... 17
MCC19..... 106
MCC19-08io1B..... 106
MCC21 106
MCC26 106
MCC44 106
MCC56 .....106, 107
MCC56-08io8B..... 107
MCC72 107
MCC94 107
MCC95 107
MCC132 107
MCC161 107
MCC162 107
MCC200 108
MCC224 108
MCC225 108
MCC255 108
MCC310..... 108
MCC312 108
MCD26 103
MCD40 103
MCD44 103
MCD56 103
MCD72 103
MCD94 104
MCD95 104
MCD132 104
MCK200 108
MCL10P1200LB 17
MCMA25P1200TA..... 106
MCMA25P1600TA..... 106
MCMA25PD1200TB 103
MCMA25PD1600TB 103
MCMA35P1200TA..... 106
MCMA35P1600TA..... 106
MCMA35PD1200TB 103
MCMA35PD1600TB 103
MCMA50P1200TA..... 106
MCMA50P1600TA..... 106
MCMA50PD1200TB 103
MCMA50PD1600TB 103
MCMA65P1200TA..... 107
MCMA65P1600TA..... 107
MCMA65P1800TA..... 107
MCMA65PD1200TB 103
MCMA65PD1600TB 103
MCMA65PD1800TB 103
MCMA85P1200TA..... 107
MCMA85P1600TA..... 107
MCMA85P1800TA..... 107
MCMA85PD1200TB 104
MCMA85PD1600TB 104
MCMA85PD1800TB 104
MCMA110P1200TA..... 107
MCMA110P1600TA..... 107
MCMA110P1600VA 107
MCMA110P1800TA..... 107
MCMA110PD1200TB 104
MCMA110PD1600TB 104
MCMA110PD1800TB 104
MCMA140P1200TA 107
MCMA140P1400TA 107
MCMA140P1600TA 107
MCMA140P1800TA 107
MCMA140PD1200TB 104
MCMA140PD1600TB 104
MCMA140PD1800TB 104
MCMA160P1600YA 107
MCMA160P1800YA 107
MCMA200P1600SA 108
MCMA200P1600YA..... 108
MCMA200P1800YA..... 108
MCMA240UI1600ED 117
MCMA240UI1600PED.....117
MCMA245UI1600ED 117
MCMA260P1600YA..... 108
MCMA260P1800YA..... 108
MCMA265P1600KA 108
MCMA265P1800KA 108
MCMA280P1600PTSF..... 108
MCMA400P1600PTSF..... 108
MCMA450UH1600TEH 118
MCMA550P1600PTSF..... 108
MCMA650MT1400NKD 97
MCMA650MT1800NKD 97
MCMA700P1600CA 108
MCMA700P1600NCA..... 108
MCMA700P1800CA 108
MCMA700P1800NCA..... 108
MCNA40P2200TA 106
MCNA40PD2200TB..... 103
MCNA55P2200TA 106
MCNA55PD2200TB..... 103
MCNA75P2200TA 107
MCNA75PD2200TB..... 104
MCNA95P2200TA 107
MCNA95PD2200TB..... 104
MCNA120P2200TA..... 107
MCNA120PD2200TB..... 104
MCNA120UI2200PED 117
MCNA120UI2200TED 117
MCNA150P2200YA 107
MCNA180P2200YA 108
MCNA220P2200YA 108
MCNA250P2200PTSF 108
MCNA360P2200PTSF 108
MCNA500P2200PTSF 108
MCNA650P2200CA 108
MCO25 109
MCO25-12io1..... 109
MCO50 109
MCO75 109
MCO100 109
MCO150 109
MCO450 109
MCO500 109
MCO600 109
MCR12DSx 94
MDA95 101
MDD26 100
MDD44 100
MDD56 100
MDD72 101
MDD72-08N1B.....101
MDD95 101
MDD142 101
MDD172 101
MDD175 101
MDD200 101
MDD255 101
MDD310 102
MDD310-12N1 102
MDD312 102
MDMA25P1200TG 100
MDMA25P1600TG 100
MDMA25P1800TG 100
MDMA35P1200TG 100
MDMA35P1600TG 100
MDMA35P1800TG 100
MDMA50P1200TG 100
MDMA50P1600TG 100
MDMA50P1800TG 100
MDMA60UC1600VC.....118
MDMA65P1200TG 100
MDMA65P1600TG 100
MDMA65P1800TG 100
MDMA85P1200TG 100
MDMA85P1600TG 100
MDMA85P1800TG 100
MDMA110P1200TG.....101
MDMA110P1600TG.....101
MDMA110P1800TG.....101
MDMA120U1600VA.....115
MDMA140P1200TG 101
MDMA140P1600TG 101
MDMA140P1800TG 101
MDMA150U1600VA.....115
MDMA180P1600YD 101
MDMA200P1600SA 101
MDMA210P1600YD 101
MDMA210UB1600PTED 117
MDMA240UB1600ED 117
MDMA280P1600YD 101
MDMA280UB1600PTED.....117
MDMA300P1600PTSF 101
MDMA360UB1600PTED.....117
MDMA360UC1600TED 118
MDMA380P1600KC 102
MDMA380P1800KC 102
MDMA425P1600PTSF 102
MDMA450U1600PTEH 116
MDMA450UB1600PTED.....117
MDMA450UB1600PTEH.....117
MDMA600P1600PTSF 102
MDMA660U1600PTEH 116
MDMA700P1600CC 102
MDMA700P1800CC 102
MDMA900U1600PTEH 116
MDNA25P2200TG..... 100
MDNA35P2200TG..... 100
MDNA50P2200TG..... 100
MDNA65P2200TG..... 100
MDNA85P2200TG..... 100
MDNA110P2200TG.....101
MDNA140P2200TG.....101
MDNA180P2200YD.....101
MDNA210P2200YD.....101
MDNA210UB2200PTED.....117
MDNA210UB2200TED.....117
MDNA240U2200ED 116
MDNA280P2200YD.....101
MDNA280UB2200PTED.....117
MDNA300P2200PTSF.....101
MDNA360UB2200PTED.....117
MDNA380P2200KC 102

MDNA425P2200PTSF 102
MDNA600P2200PTSF 102
MDNA660U2200PTEH 116
MDNA700P2200CC 102
MDO500 102
MDO600 102
MEA75 84
MEA95 84
MEA250 84
MEA300 84
MEE75 84
MEE95 84
MEE250 84
MEE300 84
MEK75 84
MEK95 84
MEK150-04DA 84
MEK250 84
MEK300 84
MEK350 84
MEK600 84
MEO450 84
MEO500 84
MEO550-02DA 84
MITA300RF1700PTED 38
MIXA10WB1200TED 37
MIXA20WB1200TED 37
MIXA30W1200TED 36
MIXA30W1200TED1 36
MIXA30WB1200TED 37
MIXA40W1200TED1 36
MIXA40WB1200TED 37
MIXA41W1200ED1 36
MIXA60HU1200VA 38
MIXA60W1200TED1 36
MIXA60WB1200TEH 37
MIXA60WH1200TEH1 37
MIXA80R1200VA 38
MIXA80W1200PTED1 36
MIXA80W1200TED1 36
MIXA80W1200TEH1 36
MIXA80WB1200TEH 37
MIXA81WB1200TEH 37
MIXA100W1200TEH1 36
MIXA150Q1200VA 38
MIXA150R1200VA 38
MIXA150W1200TEH1 36
MIXA225PF1200TSF 38
MIXA300PF1200TSF 38
MIXA450PF1200TSF 38
MIXG120W1200TEH1 36
MIXG180W1200PTEH2 36
MIXG180W1200TEH1 36
MIXG240RF1200PTED 38
MIXG240RF1200TED 38
MIXG240W1200PZTEH 36
MIXG240W1200PZTEH2 36
MIXG240W1200TEH1 36
MIXG360RF1200PTED 38
MIXG360RF1200TED 38
MKE38P600LB 17, 69
MKE38RK600DFELB 17, 69, 71
MMIX1F44N100Q3 17
MMIX1F132N50P3 17
MMIX1F160N30T 17
MMIX1F180N25T 17
MMIX1F210N30P3 17
MMIX1F230N20T 17
MMIX1F360N15T2 17
MMIX1F420N10T 17
MMIX1F520N075T2 ..... 17, 44
MMIX1G120N120A3V1 18
MMIX1H60N150V1 19
MMIX1T132N50P3 53
MMIX1T550N055T2 ..... 17, 44
MMIX1T600N04T2 ..... 17, 44
MMIX1X100N60B3H1 18
MMIX1X200N60B3 18
MMIX1X200N60B3H1 18
MMIX1X340N65B4 18
MMIX1Y82N120C3H1 18
MMIX1Y100N120C3H1 18
MMIX2F60N50P3 17
MMIX2F150N20T 17
MMJX1H40N150 19
MMO62 119
MMO62-12io6 119
MMO74 119
MMO90 119
MMO110 119
MMO140 119
MMO175 119
MMO230 119
MPK95 84
MS0690J-D1TE 97
MTC120W55GC 20
MTC120WX55GD 20
MTC120WX75GD 20
MTI85W100GC 20
MTI85WX100GD 20
MTI145WX100GD 20
MTI200WX75GD 20
MUBW50 37
MUBW50-17T8 37
MUBW75 37
MXB12R600DPHFC 71
MXB40P650LB 17
MXB40RK600DFELB 17

N

N0180SH120 150
N0180SH160 150
N0335SC120 150
N0335SC160 150
N0392WC120 150
N0392WC160 150
N0416SC040 150
N0416SC080 150
N0606YC200 150
N0606YC250 150
N0616LC400 150
N0616LC450 150
N0634LC380 150
N0634LC420 150
N0646LC300 150
N0646LC360 150
N0676YC120 151
N0676YC180 151
N0734YC120 151
N0734YC160 151
N0882NC400 151
N0882NC450 151
N0910LC200 151
N0910LC260 151
N0910LC280 151
N1010NC300 151
N1010NC380 151
N1052LC200 151
N1052LC220 151
N1114LC120 151
N1114LC180 151
N1132NC300 151
N1132NC340 151
N1132NC360 151
N1159NC380 151
N1159NC420 151
N1174JK200 151
N1174JK220 151
N1263JK160 151
N1263JK180 151
N1351VC400 151
N1351VC450 151
N1351VF400 151
N1351VF450 151
N1366JK080 151
N1366JK120 151
N1366JK140 151
N1449QL200 151
N1449QL220 151
N1467NC200 151
N1467NC260 151
N1547NC160 151
N1547NC200 151
N1581QL160 151
N1581QL180 151
N1651QK200 151
N1651QK220 151
N1661VC300 151
N1661VC360 151
N1661VF300 151
N1661VF360 151
N1718NC120 151
N1718NC180 151
N1718NC200 151
N1725MC360 152
N1802NC120 152
N1802NC160 152
N1806QK160 152
N1806QK180 152
N1817QL080 152
N1817QL120 152
N1817QL140 152
N2015ML200 152
N2015ML220 152
N2055HE420 152
N2055HE450 152
N2055MC260 152
N2055MC280 152
N2083QK080 152
N2083QK120 152
N2083QK140 152
N2086NC060 152
N2086NC100 152
N2154JK020 152
N2154JK040 152
N2154JK060 152
N2172ZC420 152
N2172ZC450 152
N2172ZD420 152
N2172ZD450 152
N2191ML160 152
N2191ML180 152
N2367MK200 152
N2367MK220 152
N2418ZC300 152
N2418ZC360 152
N2418ZD300 152
N2418ZD360 152
N2500VC120 152
N2500VC160 152
N2500VF120 152
N2500VF160 153
N2520ML080 153
N2520ML120 153
N2520ML140 153
N2543ZC240 153
N2543ZC300 153
N2543ZD240 153
N2543ZD300 153
N2593MK160 153
N2593MK180 153
N2600MC160 153
N2600MC180 153
N2825TE420 153
N2825TE450 153
N2825TJ420 153
N2825TJ450 153
N2830HE260 153
N2830HE280 153
N2900QL020 153
N2900QL040 153
N2900QL060 153
N3012ZC200 153
N3012ZC260 153
N3012ZD200 153
N3012ZD260 153
N3022MK080 153
N3022MK120 153
N3022MK140 153
N3029ZC240 153
N3029ZC280 153
N3029ZD240 153
N3029ZD280 153
N3165HA260 153
N3165HA280 153
N3175HE160 153
N3175HE180 153
N3229QK020 153
N3229QK040 153
N3229QK060 153
N3533ZC140 153
N3533ZC180 153
N3533ZC220 153

©2023 Littelfuse, Inc

N3533ZD140 153
N3533ZD180 153
N3533ZD220 153
N3565HA160 153
N3565HA180 153
N3597ML020 153
N3597ML040 153
N3597ML060 153
N3620TE320 153
N3620TE360 153
N3620TJ320 153
N3620TJ360 153
N3790TE240 153
N3790TE280 153
N3790TJ240 154
N3790TJ280 154
N3880ZD160 154
N3880ZD180 154
N3904HK200 154
N3904HK220 154
N3930ZC120 154
N3930ZC160 154
N3930ZD120 154
N3930ZD160 154
N4085ZC080 154
N4085ZC120 154
N4085ZD080 154
N4085ZD120 154
N4165EE420 154
N4165EE450 154
N4240EA480 154
N4240EA520 154
N4316MK020 154
N4316MK040 154
N4316MK060 154
N4340TE180 154
N4340TE220 154
N4340TJ180 154
N4340TJ180MBR 170
N4340TJ220 154
N4340TJ220MBR 170
N4472HK160 154
N4472HK180 154
N4650EA420 154
N4650EA450 154
N4845EE320 154
N4845EE360 154
N4940HK120 154
N4940HK140 154
N5320FE420 154
N5320FE450 154
N5715EE240 154
N5715EE280 154
N5910FA420 154
N5910FA450 154
N6012ZD020 154
N6012ZD040 155
N6012ZD060 155
N6405EA240 155
N6405EA280 155
N6974HK020 155
N6974HK040 155
N6974HK060 155
N7585FE240 155
N7585FE280 155
N7905FE180 155
N7905FE220 155
N8440FA240 155
N8440FA280 155
N8800FA180 155
N8800FA220 155
NYC0102B (200V) 94

O

OAA160 122
OMA160 121

P

P0128SH10C 158
P0128SH10D 158
P0128SH10E 158
P0128SH12C 158
P0128SH12D 158
P0128SH12E 158
P0128SJ10C 158
P0128SJ10D 158
P0128SJ10E 158
P0128SJ12C 158
P0128SJ12D 158
P0128SJ12E 158
P0248SC12D 158
P0248SC12E 158
P0273SC12D 158
P0273SC12E 158
P0273SC12F 158
P0295WC12D 159
P0295WC12E 159
P0306SC08A 158
P0306SC08B 158
P0306SC08C 158
P0311SC12E 158
P0311SC12F 158
P0327WC08C 159
P0327WC08D 159
P0327WC08E 159
P0327WC08F 159
P0327WC12C 159
P0327WC12D 159
P0327WC12E 159
P0327WC12F 159
P0330SC04A 158
P0330SC04C 158
P0330SC06A 158
P0330SC06C 158
P0330SC08A 158
P0330SC08C 158
P0366WC04A 159
P0366WC04B 159
P0366WC04C 159
P0366WC06A 159
P0366WC06B 159
P0366WC06C 159
P0366WC08A 159
P0366WC08B 159
P0366WC08C 159
P0367WC12E 159
P0367WC12F 159
P0389WC04B 159
P0389WC04C 159
P0389WC08B 159
P0389WC08C 159
P0431SC04B 158
P0431SC04C 158
P0431SC06B 158
P0431SC06C 158
P0515WC04B 159
P0515WC04C 159
P0515WC04D 159
P0515WC06B 159
P0515WC06C 159
P0515WC06D 159
P0838LC06B 159
P0838LC06C 159
P0838LC08B 159
P0838LC08C 159
P0848YC04B 159
P0848YC04C 159
P0848YC06B 159
P0848YC06C 159
P1007LC08D 159
P1007LC08E 159
P1007LC08F 159
P1007LC12D 159
P1007LC12E 159
P1007LC12F 159
PAA110 122
PAA110L 122
PAA127 122
PAA132 122
PAA140 122
PAA140L 122
PAA150 122
PAA190 122
PAA191 122
PAA193 122
PBA150 124
PBB150 123
PBB190 123
PD1201 127
PD2401 127
PD2601 127
PLA110 121
PLA110L 121
PLA132 121
PLA140 121
PLA140L 121
PLA143 121
PLA150 121
PLA160 121
PLA170 121
PLA171 121
PLA172P 121
PLA190 121
PLA191 121
PLA192 121
PLA193 121
PLA194 121
PLB150 123
PLB171 123
PLB190 123
PM1204 127
PM1205 127
PM1206 127
PS1201 127
PS2401 127
PS2601 127

Q

Q6008LTH1LED 98
Q6008xH1LED 97
Q6012LH1LEDTP 96
Q6012LTH1LED 98
Q6012xH1LED 97
Q6016LH1LED 97
Q6035NH5RP 96
Q8004D4RP 96
Q8006RH4TP 96
Q8008LH4TP 96
Q8015LTP 96
Q8025K6TP 96
Q8040K3TP 96
Q8040K5TP 96
QJ6004D4RP 96
QJ6006DH4RP 96
QJ6008DH4RP 96
QJ6016LH4TP 96
QJ6016NH2RP 96
QJ6016NH6RP 96
QJ6016RH3TP 96
QJ6025KH6TP 96
QJ6025LH5TP 96
QJ6025NH5RP 96
QJ6025RH5TP 96
QJ8012LH5TP 96
QJ8016LH6TP 96
QJ8016NH4RP 96
QJ8025LH5TP 96
QJ8025NH5RP 96
QJ8030LH4TP 96
QJ8040KH5TP 96
QJxx04xx 98
QJxx06xHx 98
QJxx06xx 98
QJxx08xHx 98
QJxx08xx 98
QJxx10xHx 98
QJxx10xx 98
QJxx12xHx 98
QJxx16xHx 98
QJxx25xHx 98
QJxx30LH4 98
QJxx35xHx 98
QJxx40xx 98
QK040J7TP 96
QK040K4TP 96
QVxx12xHx 98
QVxx16xHx 98
Qx01Ex 97
QxNx 97
Qxx04LT 98
Qxx04xx 97
Qxx06LT 98
Qxx06LTH 98
Qxx06xHx 97
Qxx06xx 97

QxX8Ex ... 97
Qxx08LT ... 98
Qxx08LTH ... 98
Qxx08xHx ... 97
Qxx08xx ... 97
Qxx10LT ... 98
Qxx10LTH ... 98
Qxx10xHx ... 97
Qxx10xx ... 97
Qxx12xHx ... 97
Qxx15LT ... 98
Qxx15LTH ... 98
Qxx15xx ... 97
Qxx16xHx ... 97
Qxx25xHx ... 97
Qxx25xx ... 97
Qxx30xHx ... 97
Qxx35xHx ... 97
Qxx40xx ... 97
QxXx ... 97

R

R0472YC12E ... 160
R0472YC12EKER ... 158
R0472YC12F ... 160
R0472YC12FKER ... 158
R0472YC16E ... 160
R0472YC16EKER ... 158
R0472YC16F ... 160
R0472YC16FKER ... 158
R0487YC12D ... 160
R0487YC12E ... 160
R0487YC14D ... 160
R0487YC14E ... 160
R0577YC12C ... 160
R0577YC12D ... 160
R0577YC12E ... 160
R0633YC12D ... 160
R0633YC12E ... 160
R0633YC12F ... 160
R0717LC14G ... 160
R0717LC14H ... 160
R0717LC16G ... 160
R0717LC16H ... 160
R0736LC20J ... 160
R0736LC20K ... 160
R0736LC22J ... 160
R0736LC22K ... 160
R0736LC25J ... 160
R0736LC25K ... 160
R0736LC25L ... 160
R0736LC25M ... 160
R0809LC10A ... 160
R0809LC10B ... 160
R0830LC12C ... 160
R0830LC12D ... 160
R0830LC12E ... 160
R0830LC12F ... 160
R0830LC14C ... 160
R0830LC14D ... 160
R0830LC14E ... 160
R0830LC14F ... 160
R0878LC18K ... 160
R0878LC18L ... 160
R0878LC18M ... 160
R0878LC20K ... 160
R0878LC20L ... 160
R0878LC20M ... 160
R0878LC21K ... 160
R0878LC21L ... 160
R0878LC21M ... 160
R0929LC12A ... 160
R0929LC12B ... 160
R0929LC12C ... 160
R0964LC10C ... 161
R0964LC10D ... 161
R0964LC10E ... 161
R0964LC12C ... 161
R0964LC12D ... 161
R0964LC12E ... 161
R0990LC08A ... 161
R0990LC08B ... 161
R0990LC08C ... 161
R1045NC28L ... 161
R1045NC28M ... 161
R1045NC32L ... 161
R1045NC32M ... 161
R1124NC18J ... 161
R1124NC18K ... 161
R1124NC18L ... 161
R1124NC18M ... 161
R1124NC20J ... 161
R1124NC20K ... 161
R1124NC20L ... 161
R1124NC20M ... 161
R1124NC21J ... 161
R1124NC21K ... 161
R1124NC21L ... 161
R1124NC21M ... 161
R1127NC32P ... 161
R1127NC32R ... 161
R1127NC32S ... 161
R1127NC32T ... 161
R1127NC34R ... 161
R1127NC34S ... 161
R1127NC34T ... 161
R1127NC36R ... 161
R1127NC36S ... 161
R1127NC36T ... 161
R1158NC26N ... 161
R1158NC26P ... 161
R1158NC26T ... 161
R1178NC14E ... 161
R1178NC14F ... 161
R1178NC14G ... 161
R1211NC12C ... 161
R1211NC12D ... 161
R1211NC12E ... 161
R1271NC12B ... 161
R1271NC12C ... 161
R1271NC12D ... 161
R1271NC12E ... 161
R1275NC18L ... 161
R1275NC18M ... 161
R1275NC20L ... 161
R1275NC20M ... 161
R1275NC21L ... 161
R1275NC21M ... 161
R1279NC22J ... 161
R1279NC22K ... 161
R1279NC22L ... 161
R1279NC22M ... 161
R1279NC25J ... 161
R1279NC25K ... 161
R1279NC25L ... 161
R1279NC25M ... 161
R1280NC21J ... 161
R1280NC21K ... 161
R1280NC21L ... 162
R1280NC21M ... 162
R1280NC22J ... 162
R1280NC22K ... 162
R1280NC22L ... 162
R1280NC22M ... 162
R1280NC25J ... 162
R1280NC25K ... 162
R1280NC25L ... 162
R1280NC25M ... 162
R1331NC10B ... 162
R1331NC10C ... 162
R1331NC10D ... 162
R1331NC12B ... 162
R1331NC12C ... 162
R1331NC12D ... 162
R1446NC12C ... 162
R1446NC12D ... 162
R1446NC12E ... 162
R1446NC12F ... 162
R1448NC14H ... 162
R1448NC14J ... 162
R1448NC18H ... 162
R1448NC18J ... 162
R1448NC20H ... 162
R1448NC20J ... 162
R1448NC20K ... 162
R1448NC20L ... 162
R1448NC20M ... 162
R1605MC20E ... 162
R1605MC20F ... 162
R1605MC20G ... 162
R1605MC20H ... 162
R1605MC20J ... 162
R1605MC22E ... 162
R1605MC22F ... 162
R1605MC22G ... 162
R1605MC22H ... 162
R1605MC22J ... 162
R1700MC18E ... 162
R1700MC18F ... 162
R1700MC18G ... 162
R1700MC18H ... 162
R1700MC18J ... 162
R1700MC21E ... 162
R1700MC21F ... 162
R1700MC21G ... 162
R1700MC21H ... 163
R1700MC21J ... 163
R1955MC14D ... 163
R1955MC14E ... 163
R1955MC14F ... 163
R1955MC16D ... 163
R1955MC16E ... 163
R1955MC16F ... 163
R2075MC12A ... 163
R2075MC12B ... 163
R2075MC12C ... 163
R2295HA22F ... 163
R2295HA22H ... 163
R2475ZC28M ... 163
R2475ZC28N ... 163
R2475ZC28R ... 163
R2475ZD28M ... 163
R2475ZD28N ... 163
R2475ZD28R ... 163
R2619ZC18J ... 163
R2619ZC18K ... 163
R2619ZC18L ... 163
R2619ZC20J ... 163
R2619ZC20K ... 163
R2619ZC20L ... 163
R2619ZC21J ... 163
R2619ZC21K ... 163
R2619ZC21L ... 163
R2619ZC25J ... 163
R2619ZC25K ... 163
R2619ZC25L ... 163
R2619ZD18J ... 163
R2619ZD18K ... 163
R2619ZD18L ... 163
R2619ZD20J ... 163
R2619ZD20K ... 163
R2619ZD20L ... 163
R2619ZD21J ... 163
R2619ZD21K ... 163
R2619ZD21L ... 163
R2619ZD25J ... 163
R2619ZD25K ... 163
R2620ZC22J ... 163
R2620ZC22K ... 163
R2620ZC22L ... 163
R2620ZC25J ... 163
R2620ZC25K ... 163
R2620ZC25L ... 163
R2620ZD22J ... 163
R2620ZD22K ... 163
R2620ZD22L ... 163
R2620ZD25J ... 163
R2620ZD25K ... 163
R2620ZD25L ... 163
R2714ZC14H ... 163
R2714ZC14J ... 163
R2714ZC18H ... 163
R2714ZC18J ... 163
R2714ZC18K ... 163
R2714ZD14H ... 163
R2714ZD14J ... 163
R2714ZD14K ... 163
R2714ZD18H ... 164
R2714ZD18J ... 164
R2714ZD18K ... 164
R3115TJ24J ... 164
R3115TJ24K ... 164
R3115TJ28J ... 164

©2023 Littelfuse, Inc

R3115TJ28K ... 164
R3370ZC12C ... 164
R3370ZC12D ... 164
R3370ZC12E ... 164
R3370ZD12C ... 164
R3370ZD12D ... 164
R3370ZD12E ... 164
R4680EA24K ... 164
R4680EA24L ... 164
R4680EA24M ... 164
R4680EA28K ... 164
R4680EA28L ... 164
R4680EA28M ... 164
R5145FA42V ... 164
R5145FA42W ... 164
R5145FA45V ... 164
R5145FA45W ... 164
R5370EA18J ... 164
R5370EA18K ... 164
R5370EA22J ... 164
R5370EA22K ... 164

S

S8X5ECSx ... 94
S0300SR12Y ... 166
S0500KC20Y ... 166
S0500KC25D ... 166
S0500KC25Y ... 166
S0500KC200 ... 166
S0500YC20Y ... 166
S0500YC25Y ... 166
S0700KC14Y ... 166
S0700KC17D ... 166
S0700KC17Y ... 166
S0700KC140 ... 166
S802CSx ... 94
S802xSx ... 94
S1200NC20Y ... 166
S1200NC25D ... 166
S1200NC25Y ... 166
S1200NC200 ... 166
S4040xQx ... 95
S6002xS ... 94
S8016xAx ... 95
SJxx04xSx ... 95
SJxx06xxx ... 95
SJxx08xxx ... 95
SJxx10xxx ... 95
SJxx12xx ... 95
SJxx16xx ... 95
SJxx20xx ... 95
SJxx20xxA ... 95
SJxx25xx ... 95
SJxx25xxA ... 95
SJxx32xx ... 95
SJxx32xxA ... 95
SJxx40xx ... 95
SJxx40xxA ... 95
SRUK208x (1200V) ... 94
STx802U2Sx ... 94
SV6050xAx ... 95
SV6050xx ... 95
SVxx12xx ... 95
SVxx12xxQ ... 95
SVxx16xx ... 95
SVxx16xxQ ... 95
SVxx20xx ... 95
SVxx20xxQ ... 95
SVxx25xx ... 95
SVxx25xxQ ... 95
Sx01E ... 94
Sx02xSx ... 94
SXB1265FB ... 173
SXB1375B ... 173
SXB1645FB ... 173
SXB1764FG ... 173
SXB1920G ... 173
SXB2096B ... 173
SXB2167FB ... 173
SXB2324FG ... 173
SXB2939G ... 173
SXB3120FG ... 173
SXB3442B ... 173
SXB3529HEXT ... 173
SXB3840HEX ... 173
SXB4264B ... 173
SXB4649HEXT ... 173
SXB4869G ... 173
SXB5877HEX ... 173
SXB5993G ... 173
SXB6240HEXT ... 173
SXB9737HEX ... 173
SXB11987HEX ... 173
SXC1076FB ... 175
SXC1195FR ... 175
SXC1318FB ... 175
SXC1464FR ... 175
SXC1517FG ... 175
SXC1609FB ... 175
SXC1788FR ... 175
SXC1871FG ... 175
SXC2319FG ... 175
Sxx04xSx ... 94
Sxx06xxx ... 94
SxX8BBSx ... 94
SxX8xSx ... 94
Sxx08xxx ... 94
Sxx10xxx ... 94
Sxx12xx ... 94
Sxx16xx ... 94
Sxx20xx ... 94
Sxx25xx ... 94
Sxx35x ... 94
Sxx40x ... 94
Sxx55x ... 95
Sxx65x ... 95
Sxx70x ... 95

T

T0115QB45G ... 168
T0140QC33G ... 167
T0240NB45E ... 168
T0258HF65G ... 168
T0285NC33E ... 167
T0340VB45G ... 168
T0385HF65E ... 168
T0425VC33G ... 167
T0510VB45E ... 168
T0600NC17A ... 167
T0600TB45A ... 168
T0640VC33E ... 167
T0710TC33A ... 167
T0800EB45G ... 168
T0800TB45E ... 168
T0840NC17E ... 167
T0900AF65E ... 168
T0900DF65A ... 168
T0900EB45A ... 168
T0960VC17G ... 167
T1000EC33G ... 167
T1000TC33E ... 167
T1200EB45E ... 168
T1290BF65A ... 168
T1375DF65E ... 168
T1440VC17E ... 167
T1500EC33E ... 167
T1600GB45G ... 168
T1800GB45A ... 168
T1890BF65E ... 168
T2000BB45G ... 168
T2000GC33G ... 167
T2322B ... 97
T2400GB45E ... 168
T2960BB45E ... 168
T3000GC33E ... 167
TCR22 ... 94

U

UGB3132AD ... 119
UGB6124AG ... 119
UGD6123AG ... 119
UGD8124AG ... 119
UGE0221AY4 ... 119
UGE0421AY4 ... 119
UGE1112AY4 ... 119
UGE3126AY4 ... 119

V

VBE17 ... 111
VBE17-06NO7 ... 111
VBE26 ... 111
VBE55 ... 111
VBE60 ... 111
VBE100 ... 111
VBO21 ... 112
VBO22 ... 112
VBO36 ... 112
VBO40 ... 112
VBO52 ... 112
VBO54 ... 112
VBO68 ... 112
VBO72 ... 112
VBO78 ... 113
VBO78-08NO7 ... 113
VBO88 ... 113
VBO130 ... 113
VBO160 ... 113
VCO132 ... 109
VCO180 ... 109
VGO36 ... 113
VHF25 ... 113
VHF25-08io7 ... 113
VHFD37 ... 113
VTO39 ... 118
VTO39-08ho7 ... 118
VUB72 ... 117
VUB72-12NOXT ... 117
VUB116 ... 117
VUB120 ... 117
VUB135 ... 117
VUB145 ... 117
VUB160 ... 117
VUC36 ... 118
VUC36-12go2 ... 118
VUE22 ... 111
VUE35 ... 111
VUE50 ... 111
VUE75 ... 111
VUE130 ... 111
VUI72 ... 117
VUO25 ... 114
VUO28 ... 114
VUO34 ... 114
VUO36 ... 114
VUO52 ... 114
VUO62 ... 115
VUO62-08NO7 ... 115
VUO64 ... 115
VUO68 ... 115
VUO80 ... 115
VUO82 ... 115
VUO84 ... 115
VUO86 ... 115
VUO98 ... 115
VUO105 ... 115
VUO110 ... 115
VUO121 ... 115
VUO122 ... 115
VUO160 ... 116
VUO162 ... 116
VUO190 ... 116
VUO192 ... 116
VVZ39 ... 118
VVZ39-08ho7 ... 118
VVZ40 ... 118
VVZ110 ... 118
VVZ175 ... 118
VVZB120-16ioX ... 117
VVZB135 ... 117
VVZB170 ... 117
VW2x60 ... 119
VWO35 ... 119

W

W106CEC240 ... 142
W106CEC280 ... 142
W108CED180 ... 142
W108CED220 ... 142
W121CEC180 ... 142
W121CEC220 ... 142
W0428RE280 ... 136
W0428RE320 ... 136
W0428RF250 ... 136
W0428RF280 ... 136
W0428RF320 ... 136
W0428SE250 ... 136
W0428SE280 ... 136

Alphanumeric Index

W0428SE320 136
W0428SF250 136
W0428SF280 136
W0428SF320 136
W0503RC160 136
W0503RC200 136
W0503RC240 136
W0503SC160 136
W0503SC200 136
W0503SC240 136
W0507YH420 138
W0507YH450 138
W0642WC160 138
W0642WC200 138
W0642WC240 138
W0735RA120 136
W0735RA150 136
W0735SA120 136
W0735SA150 136
W0790LG650 138
W0880LC620 138
W0880LC650 138
W0880LC680 138
W0925LG500 138
W0925LG560 138
W0925LG600 138
W0944WC120 138
W0944WC150 138
W1032LC500 138
W1032LC560 138
W1032LC600 138
W1060LG420 138
W1060LG450 138
W1074YC200 138
W1074YC260 138
W1074YC320 138
W1074YH200 138
W1074YH260 138
W1074YH320 138
W1185LC420 138
W1185LC450 138
W1185LC450KBN 137
W1185LC450KBR 137
W1185LC450KCN 137
W1185LC450KCR 137
W1260LG320 138
W1260LG360 138
W1263YC160 138
W1263YC200KER 136
W1263YC200KES 136
W1263YC220 138
W1263YC250 138
W1263YC250KER 136
W1263YC250KES 136
W1263YH160 138
W1263YH200 138
W1263YH250 139
W1360LG240 139
W1360LG300 139
W1411LC360KBN 137
W1411LC360KBR 137
W1411LC360KCN 137
W1411LC360KCR 137
W1524LC300KBN 137
W1524LC300KBR 137
W1524LC300KCN 137
W1524LC300KCR 137
W1748LC180 139
W1748LC220KBN 137
W1748LC220KBR 137
W1748LC220KCN 137
W1748LC220KCR 137
W1748LC250 139
W1856NC400 139
W1856NC500 139
W1975MC620 139
W1975MC650 139
W1975MC680 139
W2054NC420 139
W2054NC450 139
W2058LC100 139
W2058LC120 139
W2058LC120KBN 137
W2058LC120KBR 137
W2058LC120KCN 137
W2058LC120KCR 137
W2058LC140 139
W2115MC520 139
W2115MC560 139
W2115MC600 139
W2134NC360 139
W2134NC400 139
W2624NC240 139
W2624NC280 139
W2624ND240 139
W2624ND280 139
W2820VC420 139
W2820VC450 139
W2820VF420 139
W2820VF450 139
W2830HE520 139
W2830HE560 139
W2830HE600 139
W2865HA620 139
W2865HA650 139
W2865HA680 139
W2899MC460 139
W2899MC480 139
W3082MC420 139
W3082MC450 139
W3082MC450KDN 137
W3082MC450KDR 137
W3090HA520 139
W3090HA560 139
W3090HA600 139
W3128VC360 139
W3128VC400 139
W3128VF360 139
W3128VF400 139
W3270NC22A 139
W3270NC200 139
W3270NC220 139
W3455QK200 139
W3455QK220 139
W3477MC360 139
W3477MC400 139
W3630TE650 139
W3630TJ650 139
W3697VC220 139
W3697VC280 139
W3697VF220 139
W3697VF280 139
W3708MC320 139
W3708MC350 140
W3708MC350KDN 137
W3708MC350KDR 137
W3743ZC400 140
W3743ZC450 140
W3743ZC500 140
W3743ZD400 140
W3743ZD450 140
W3743ZD500 140
W3841VC300 140
W3841VC340 140
W3841VF300 140
W3841VF340 140
W3842MC28A 140
W3842MC240 140
W3842MC280 140
W3842MC280KDN 137
W3842MC280KDR 137
W3864QK120 140
W3864QK150 140
W3864QK180 140
W4096ZC420 140
W4096ZC450 140
W4096ZD420 140
W4096ZD450 140
W4205TE520 140
W4205TE560 140
W4205TE600 140
W4205TJ520 140
W4205TJ560 140
W4205TJ600 140
W4534NC030 140
W4534NC060 140
W4534ND030 140
W4534ND060 140
W4693QK050 140
W4693QK080 140
W4693QR050 140
W4693QR080 140
W4713HL300 141
W4713HL350 141
W4713HM300 141
W4713HM350 141
W4767MC180 141
W4767MC220 141
W5092ZC320 141
W5092ZC350 141
W5092ZD320 141
W5092ZD350 141
W5130MK240 141
W5130MK280 141
W5139TE450 141
W5139TE480 141
W5139TJ450 141
W5139TJ480 141
W5282ZC240 141
W5282ZC300 141
W5282ZD240 141
W5282ZD300 141
W5334MK200 141
W5334MK220 141
W5636MC120 141
W5636MC150 141
W5636MC150KDN 137
W5636MC150KDR 137
W5696VC100 141
W5696VC140 141
W5696VF100 141
W5696VF140 141
W5715ED520 141
W5715ED560 141
W5715ED600 141
W5838ZC180 141
W5838ZC220 141
W5838ZD180 141
W5838ZD220 141
W5984TE360 141
W5984TE400 141
W5984TJ360 141
W5984TJ400 141
W6262ZC200 141
W6262ZC240 141
W6262ZD200 141
W6262ZD240 141
W6360EC520 141
W6360EC560 141
W6360EC600 141
W6672TE320 141
W6672TE350 141
W6672TJ320 141
W6672TJ350 141
W7045MC030 141
W7045MC060 141
W8405ZC100 141
W8405ZC140 141
W8405ZD100 141
W8405ZD140 141
W8570TE180 142
W8570TE220 142
W8570TJ180 141
W8570TJ180MBR 170
W8570TJ220 141
W8570TJ220MBR 170
W9830TE120 142
W9830TE150 142
W9830TJ120 142
W9830TJ120MBR 170
W9830TJ150 142
W9830TJ150MBR 170

X

XAA117 122
XAA170 122
XBB170 123
XCA170 121
XCB170 123
XK0450BA019M 181
XK0450BA025M 181
XK0450BB019M 181
XK0450BB025M 181

©2023 Littelfuse, Inc

XK0450DA056M 177
XK0450DT056M 177
XK0450SA056M 177
XK0550DA056M 177
XK0550SA056M 177
XK0600DA074M 177
XK0600SA074M 177
XK0900DA056M 177
XK0900DT056M 177
XK0900SA056M 177
XK1000BA025M 181
XK1000DA074M 177
XK1000SA074M 177
XK1100DA076M 177
XK1130DA076M 177
XK1130DT076M 177
XK1130SA076M 177
XK1130SB076M 178
XK1500BA034M 181
XK1500CB034M 178
XK1800DA076M 177
XK1800DT076M 177
XK1800SA076M 177
XK2000DA114M 178
XK2000SA114M 178
XK2100DA076M 177
XK2100DA076ML 177
XK2100SA076M 177
XK2100SA076ML 177
XK2140DA076M 177
XK2140DA076ML 177
XK2140DT076M 177
XK2140DT076ML 177
XK2140SA076M 177
XK2140SA076ML 177
XK2140SB076M 178
XK2500DA114M 178
XK2500DA116M 178
XK2500DA116ML 178
XK2500SA114M 178
XK2500SA116M 178
XK2500SA116ML 178
XK2700DA076M 177
XK2700DT076M 177
XK2700SA076M 177
XK3000DA116M 178
XK3000DA116ML 178
XK3000SA116M 178
XK3000SA116ML 178
XK3060DA140ML 178
XK3060SA140ML 178
XK3500DA116M 178
XK3500DA116ML 178
XK3500SA116M 178
XK3500SA116ML 178
XK4000DA116M 178
XK4000DA116ML 178
XK4000SA116M 178
XK4000SA116ML 178
XK5000DA128M 178
XK5000DA128ML 178
XK6120DA180ML 178
XK6120SA180ML 178
XK7000DA128M 178
XK7000DA128ML 178
XK8000DA180ML 178
XK8000SA180ML 178
XK9000DA160M 178
XK9000DA160ML 178
XK9000SA160M 178
XK9000SA160ML 178
XSF30xxxxAN 181
XSF46xxxxAN 181
XSFGAxxxxAN 181
XSFGxxxxAN 181
XSFHxxxxAN 181
XSFLPxxxxAN 181
XSFTBxxxxAN 181
XSFTCxxxxAN 181
XSFTxxxxAN 181
XSK1500DA076038 181
XSK1500DA076076 181
XSK1500DA076101 181
XSK2000DA076038 181
XSK2000DA076076 181
XSK2000DA076101 181
XSK3000DA076038 181
XSK3000DA076076 181
XSK3000DA076101 181
XSK3400DA076038 181
XSK3400DA076076 181
XSK3400DA076101 181
XSK3800DA116M076 181
XSK3800DA116M101 181
XSK4400DA116M076 181
XSK4400DA116M101 181
XSK6000DA116M076 181
XSK6000DA116M101 181
XSL200D8WRC 176
XSL200D8WRCP 176
XSL220C2WRT 176
XSL300C2WRP 176
XSL300C2WS 176
XSL350C2WRP 176
XSL400C2WRP 176
XSL500C2WRP 176
XSL600C2WRP 176
XSL1000C2WRP 176
XSL1000C2WRT 176
XSL1100C2WRT 176
XSNM12H10S 182
XSNM12H12S 182
XST1000M08P 176
XST1000M10P 176
XST1000M12P 176
XST1000M16P 176
XW076NC16A 182
XW076NC16B 182
XW076NC16BS 182
XW076NC16BT 182
XW076NC16C 182
XW076NC16CT 182
XW076NC16R 182
XW076NC16W 182
XW116ZC20A 182
XW116ZC20B 182
XW116ZC20C 182
XW116ZC20R 182
XW116ZC20W 182
XW127EA25A 182
XW127EA25B 182
XW127EC25A 182
XW127EC25B 182
XW160FC25A 182
XW160FC25B 182
XW180BA34E 182
XW180BA34F 182
XW180GA34A 182
XW180GA34B 182
XW180GC34A 182
XW180GC34B 182
XW270QA25A 182

Y

Y200CKC250 165
Y500CNC250 165

General Lab Capabilities

You need to be certain that your products live up to the highest standards for performance, reliability, safety, and regulatory compliance. Working with Littelfuse, you have access to dedicated application engineers who partner with you to provide expert design consultation, perform comprehensive tests simulating the harshest environments, and confidentially evaluate the results in consultation with you.

Testing Capabilities

Environmental

- Autoclave
- Dust
- H3TRB
- HAST
- High- & Low Temperature Storage
- High-Temperature Loading
- Ingress Protection (IP)
- HTGB
- HTRB
- Temperature & Humidity
- Temperature Cycling
- Thermal Shock
- Salt Fog

Physical-Mechanical Characteristics

- Acceleration
- Die Shear
- Leak Detection
- Mechanical Shock
- Resistance to Soldering Heat (Dip,Reflow, Wave)
- Resistance to Solvents
- Solderability
- Terminal Strength (Push, Pull, Bend)
- Vibration
- Wetting Balance
- Wire Pull

Electrical

- BCI
- Capacitance
- EFT
- ESD
- Impedance
- Insulation Resistance
- I-V
- Life
- Lightning Surge
- Overload
- Parametric Tests
- Power-Cross
- Power Cycling
- Ring Wave
- R-T
- S-Parameter Measurements (Insertion Loss, Isolation, Reflection)
- Short Circuit
- Step Current
- Surface Resistivity
- Surge
- TDR (Eye Diagram)
- Telecom
- Thermal Cut-Off
- Time-to-Trip
- TLP
- Transient
- Trip Cycle
- Trip Endurance
- Voltage Drop

To access this guide and other **Littelfuse** literature in an interactive and mobile-friendly format, please visit our **eCatalog** library.

Scan or click to download

©2023 Littelfuse, Inc